SYSTEM CENTURY® DCO
LINE/TRUNK CIRCUITS
INP / OUTP.

DESCRIPTION

CONTENTS

Par.		Page
1.	Introduction	1
2.	Related Information	2
2.01	General	2
2.02	Related Publications	2
3.	General	2
4.	Line Circuit	2
5.	Sleeve Lead Line Circuit	3
6.	Prepay Paystation Line Circuit	6
7.	Fire-Reporting System	6
8.	DNI Port Circuit	6
9.	E & M Trunk Circuits	7
9.01	Two-to-Four-Wire Circuit	7
9.02	Four-Wire Circuit	10
10.	Loop Reverse-Battery Trunk Circuit	12
11.	Battery- and Ground-Pulsing Loop Trunk Circuit	12
12.	Step-by-Step Incoming Trunk Circuit	15
13.	Step-by-Step Outgoing Trunk Circuit	15
14.	Digital Trunk Interface	18
14.01	General	18
14.02	DTI Interface	18
14.03	T-1 Receiver	18
14.04	T-1 Transmitter	18
14.05	DTI Diagnostics	18
15.	Busy Verification Circuit	20
16.	Tape Announcer Control Circuit	20
17.	Operating Limits	22
17.01	Subscriber Lines	22
17.02	Party Identification	22
17.03	Interoffice Trunks	22
17.04	Pulsing Limits	23
17.05	On-Hook, Off-Hook Recognition Limits	23
18.	Equipment Location	23

ILLUSTRATIONS

Fig.		Page
1.	Port Circuit and Service Port Circuit, Orientation Diagram	3
2.	Line Circuit, Block Diagram	4
3.	Sleeve Lead Line Circuit, Block Diagram	5
4.	DNI Port Circuit, Block Diagram	8
5.	Two-to-Four-Wire E & M Trunk Circuit, Block Diagram	9
6.	Four-Wire E & M Trunk Circuit, Block Diagram	11
7.	Loop Reverse-Battery Trunk, Block Diagram	13
8.	Battery- and Ground-Pulsing, Loop Trunk, Block Diagram	14
9.	Step-by-Step Incoming Trunk, Block Diagram	16
10.	Step-by-Step Outgoing Trunk, Block Diagram	17
11.	Digital Trunk Interface, Basic Block Diagram	19
12.	Normal Call Connection Versus Busy Verification Connection	21
13.	Busy Verification Circuit, Block Diagram	22

TABLES

No.		Page
1.	Subscriber Line Operating Limits	23
2.	Frequency Pairs Used For DTMF Signaling	24

1. INTRODUCTION

1.01 This section provides functional descriptions of the various port and service port circuits used in SYSTEM CENTURY® Digital Switching Offices. Also included are descriptions of the physical arrangement of circuits on the associated assemblies, indications of the effect of component failures in the circuits, and special physical or electrical characteristics of the circuits.

1.02 This section is reissued to revise information provided in paragraph 2.02.

Copyright 1982 by Stromberg-Carlson Corporation. All rights reserved. This document or parts thereof may not be reproduced in any form without the express written permission of Stromberg-Carlson Corporation. The information contained in this document is subject to change without notice.

2. RELATED INFORMATION

2.01 General.

A Sales and Instructional Literature Index of latest available publications can be obtained from your Stromberg-Carlson sales representative or from Publications Services, Stromberg-Carlson Corporation, P.O. Box 1698, Sanford, Florida 32771.

2.02 Related Publications.

The following publications are recommended for use with this document. To determine the actual number of the section titled Equipment Location, refer to the *Index of Related Sections* provided with your set of Stromberg-Carlson Practices (SCPs).

23-YYY-51	Equipment Location
24-010-02	Distributed Network Interface, General Description

3. GENERAL

3.01 Port circuits are defined as those circuits that serve as an interface between the switching network, by way of the port grouping circuits, and the station lines or interoffice trunks that enter the office and are terminated at the combined distributing frame (CDF). Service ports are those circuits that serve as an interface between the switching network and special service circuits that are required for processing, routing, advancing, and/or terminating any type of call. Figure 1 is an orientation diagram showing relative positions of port and service port circuits in the DCO system.

4. LINE CIRCUIT

4.01 The line circuit provides a controlled interface between the DCO switching system and a subscriber line terminated at the CDF. Two line circuits are provided on each line circuit printed wiring board assembly (PWBA). Associated with each line circuit on the PWBA is CODEC circuit, which provides analog-to-digital and digital-to-analog conversion of all voice signals. Three different types of PWBAs are available to permit the use of different means of supervision and allow for multiparty service. The various assemblies are:

814529-026	Four-Party, Bridged Ringing
814530-026	Eight-Party, Bridged or Divided Ringing
814531-026	Single-Party, Reverse-Battery, Loop or Ground Start, Bridged Ringing

4.02 Each circuit is arranged for two-to-four (2/4) wire mode of transmission with two wires to the subscriber and four wires to the switching system. Incoming loop supervision is used for each assembly. The 814531-026 assembly has an option for ground-start seizure to activate the calling battery (CB) relay.

4.03 Two-way analog signals on the subscriber line are converted to two 1-way (transmit and receive) analog signals. These are digitally encoded to and decoded from pulse-code modulation (PCM) in the CODEC circuit that connects to the main DCO switching circuitry. Under the direction of the port group control (PGC) circuits, the line circuit allows single and multiparty ringing, ground start, battery reversal, party test, and line/port isolation for test purposes. The on-hook/off-hook condition of the line is sensed by the line circuit and transmitted by supervisory sense bits to the port group control.

4.04 A series of relays establishes the normal data path into each circuit, as shown in figure 2. Two of these relays, reverse and ground start, are optional. The test access, ringing, and CB relays are a standard feature of every line circuit. In addition to providing a path for normal call data through the line circuit, the relays also make possible various other features. The test access relay allows testing of the tip and ring leads through the system or out toward the subscriber. The reverse relay provides a way to reverse battery polarity on the tip and ring leads. The ringing relay and the ground relay, together, are used to apply ringing frequencies to the line and to do party tests. After being switched through the test access, reverse, and ringing relay contacts, the tip and ring leads are terminated in the basic audio interface circuit.

4.05 The basic audio interface allows signals on the bidirectional tip and ring leads to be transferred to unidirectional transmit and receive lines. Analog and digital conversion of these signals takes place in the CODEC circuit. The resulting digital signals are multiplexed by the mux/demux circuit onto the port group highway for subsequent transfer to the timeslot interchange (TSI). Conversely, digital data bits are demulti-

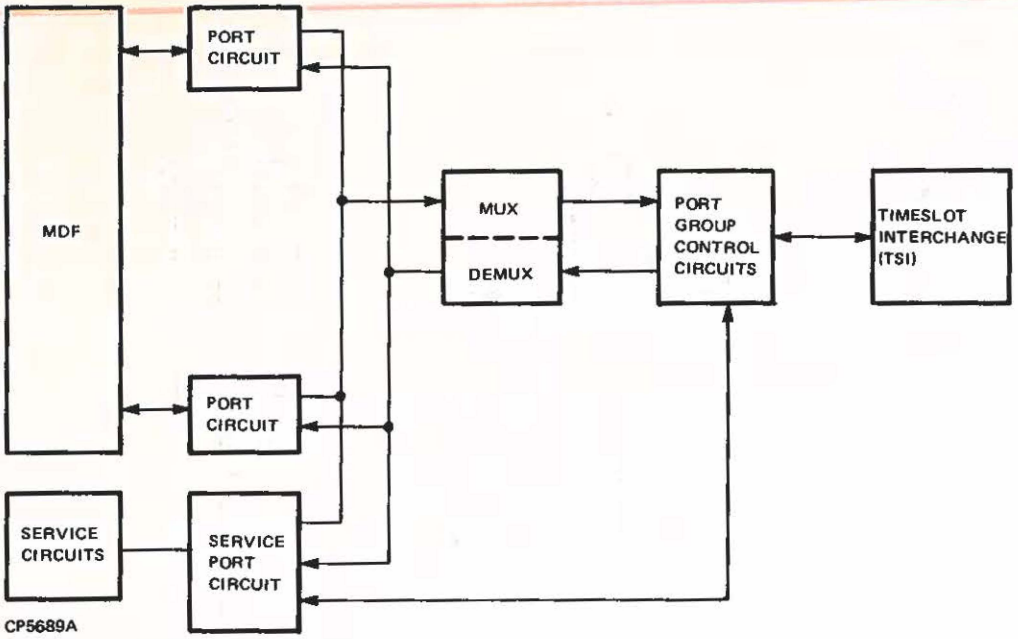

Figure 1. Port Circuit and Service Port Circuit, Orientation Diagram

plexed by the mux/demux and demodulated by the CODEC on the line circuit PWBA. The analog signal that results is applied to the basic audio interface for transfer to the tip and ring leads of the line. The analog output signal is carried through the relay contacts described previously and thereby transferred out to the subscriber.

4.06 A failure of a component on a line circuit PWBA causes a failure only to the related line circuit. It can affect dial tone, voice transmission, ringing, outgoing supervision and signaling, testing, or miscellaneous metering. Failure of up to 14 line circuit PWBAs is considered a minor failure since less than 30 system ports are affected.

5. SLEEVE LEAD LINE CIRCUIT

5.01 The sleeve lead line circuit is capable of interfacing the DCO switching system to a variety of subscriber or peripheral equipment. One or more of the following can be provided by the circuit:

a. Sleeve lead control and sensing.
b. Meter pulse control for message metering.
c. Loop range extender control.
d. External test access control.
e. Reverse-battery supervision.
f. Sleeve lead ground start supervision.
g. Multiparty ringing.
h. Interface with the following:
   1. Hotel/motel systems.
   2. Private branch exchanges.
   3. Improved mobile telephone service (IMTS).
   4. Customer-supplied volunteer fire reporting systems.
   5. Specialized line adapters.

5.02 The two-way analog signals on the tip and ring leads are converted to and from pulse-code modulated signals for a regular line circuit, as described in paragraph 4. One sleeve lead line circuit (fig. 3) is contained on each PWBA 814514-026.

5.03 The reverse relay reverses the tip and ring leads to provide reverse-battery answer supervision and to apply ringing to the tip lead for divided ringing applications. The ringing relay connects the multifrequency ringing bus to the ring lead (or tip lead if reverse relay is operated). The CB relay monitors the tip and ring loop status and repeats dial pulses to the sense bit driver and port group control I (PGC I) by operating and releasing as the loop is closed and opened. The ground relay grounds the tip lead for ground-start operation and grounds the sleeve lead for sleeve lead control operation. The sleeve relay operates when a ground is received on the sleeve lead. This breaks the tip and ring paths and sends a sense bit to the PGC I. The party test relay applies tip and ring party test voltages when automatic number identification (ANI) is required on four-party lines. The test access relays allow testing of the tip, ring,

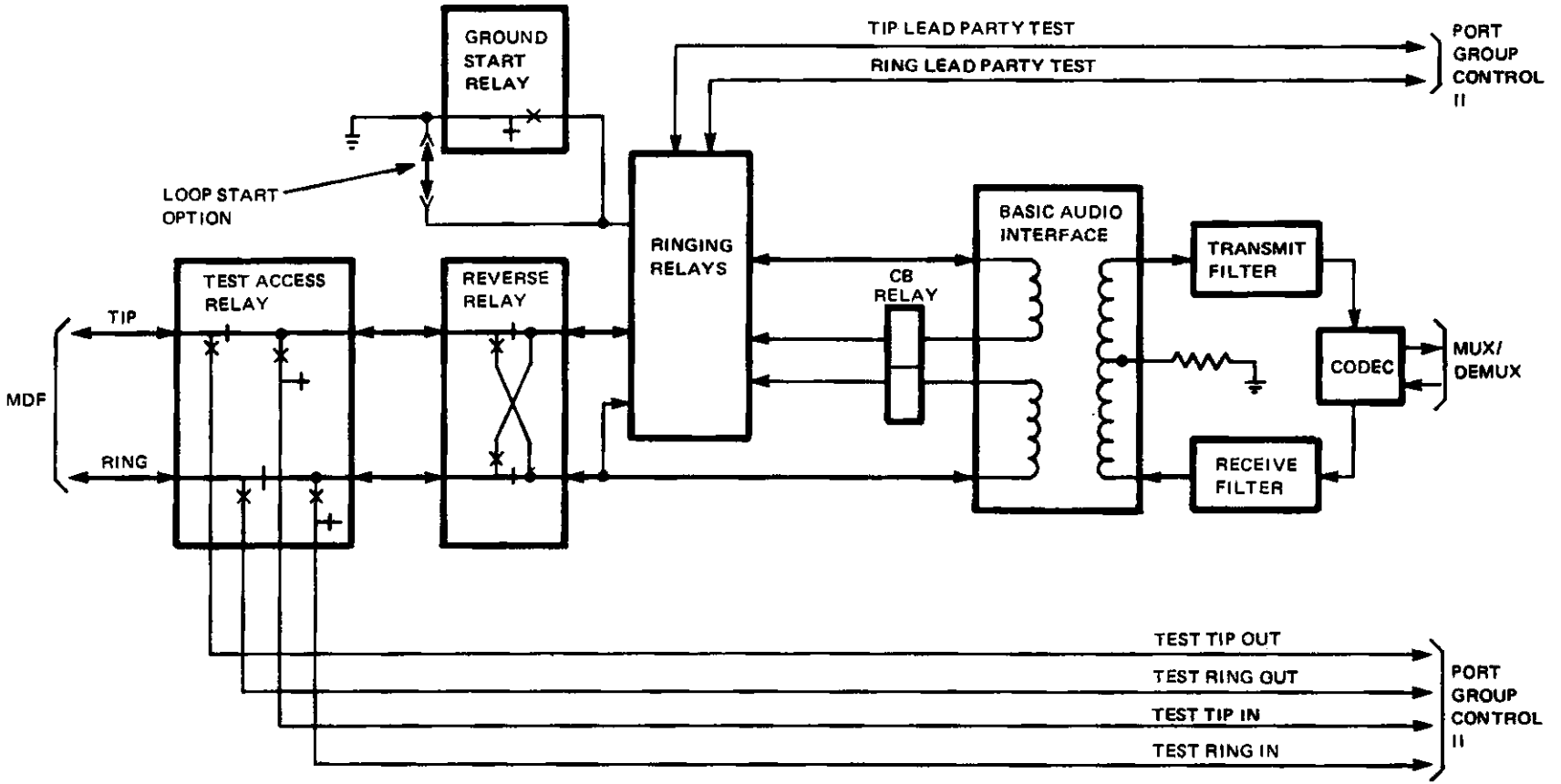

NOTE: Heavy line represents normal analog path.

CP 7698

Figure 2. Line Circuit, Block Diagram

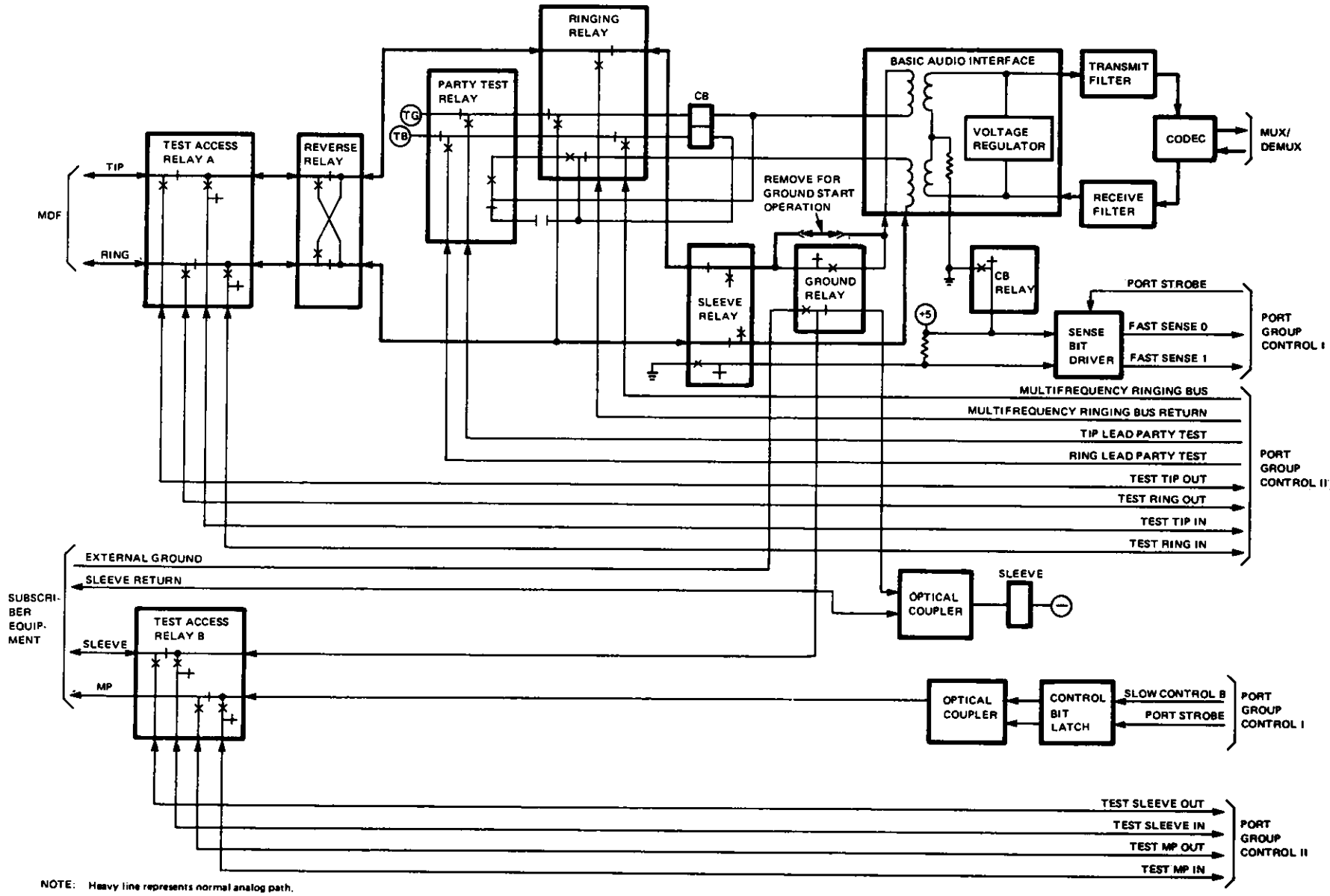

Figure 3. Sleeve Lead Line Circuit, Block Diagram

sleeve, and meter pulse (MP) leads out toward the subscriber equipment and into the DCO.

6. PREPAY PAYSTATION LINE CIRCUIT

6.01 The prepay paystation line circuit provides a controlled interface between the DCO switching system and a prepay or local prepay/toll postpay paystation terminated at the main distributing frame. One paystation line circuit is contained on each paystation line circuit PWBA 814438-026.

6.02 The paystation line circuit provides normal line-circuit functions provided by a regular single-party line circuit as described in paragraph 4. It also provides for special coin-related functions, such as means for coin collecting, coin returning, coin-deposit sensing, and sensing of stuck coins. The line circuit is designed to serve single-slot or multislot prepay paystations, and coin-first or dial-tone-first signaling, using either inband tones or the five-wink method for operator control of coins.

6.03 The voice path is similar to that of a regular line circuit, but it passes through contacts of several additional relays and is arranged to be split off from the paystation line and connected to an inband tone receiver to receive coin-control or rering tone signals from an operator. Coin collect or coin refund at the paystation is done by applying +110 volts or −110 volts respectively, to the paystation line by means of coin collect and coin return relays. The stuck coin relay is used to determine if a coin is stuck in the coin mechanism.

7. FIRE-REPORTING SYSTEM

7.01 The fire-reporting system provides up to 30 line circuits for special signaling and talking features. The system consists of a Tellabs 291 Conference/Alerting System and a line circuit for each firefighter. The line circuit can be a DNI or standard direct port, single-party, bridged-ringing line circuit. This arrangement provides for the return of ringback tone to the calling party when the called party is engaged in a fire conference call.

7.02 When the conference circuit is seized, all free firefighter's lines are disengaged from the DCO switching system and distinctive ringing is applied to their lines. Busy firefighter's lines can either have warning tone applied to the connection or the existing conversation can be immediately cut off. The choice is an on-site system option. If alerting tone is chosen, the firefighter need only depress the hookswitch long enough to break down the existing connection to be automatically routed to the conference circuit. The basic system provides siren control activated by pushbutton from any or selected firefighter's lines. Once activated, the siren sounds until the conference circuit is released.

7.03 Several options available with the Tellabs system are:

a. Automatic Conference Activation.

1. This is the same as most existing fire alarm systems in use today. A caller dials a fire-reporting number that automatically initiates a fire conference.

2. The automatic conference activation equipment can be furnished either as a single unit or with redundancy.

3. One line circuit, single-party, bridged, is required for the fire-reporting line.

b. Manual Conference Activation.

1. In this mode, a caller dialing the fire-reporting number is connected to a telephone located in the fire company's dispatch office. When the dispatcher has ascertained the caller's needs, the dispatcher can activate the fire conference from a second telephone directly connected to the fire system.

2. Manual activation equipment can be furnished either as a single unit or with redundancy.

3. In this mode, one single-party line circuit is required for the fire-reporting line. In addition, the telephone company must supply two dial-less telephones at the dispatch office; one connected to the DCO switching system line circuit, and one to the Tellabs unit.

8. DNI PORT CIRCUIT

8.01 The Distributed Network Interface (DNI) port circuit is the common port that connects DNI subscribers to the DCO. Because several different types of lines may be connected to the 100-line DNI network

associated with each DNI port, the ports are designed to provide the features and functions required by the various lines. The ports serve both incoming and outgoing calls and provide talking battery to DNI lines through the CB relay. Two port circuits are provided on each PWBA 814309-026. A detailed description of the DNI is contained in the section titled *Distributed Network Interface, General Description*, referenced in paragraph 2.02.

8.02 The basic circuitry and the normal transmission path through the DNI port circuit are shown in figure 4. The bidirectional tip and ring voice paths from the concentration network are terminated in the basic audio interface. Here the bidirectional paths are converted to unidirectional transmit and receive lines that carry analog signals to or from the CODEC. The CODEC converts the analog signals received from DNI subscribers to digital data for transmission through the DCO. For transmission to the DNI subscribers, the CODEC converts digital data bits to analog signals.

8.03 The DNI port control (fig. 4) receives control bits from both ports on the PWBA by way of the PGC I circuit. The DNI port control outputs provide control of cutthrough, ringing, tip and ring reversal, ANI access, test access, and sleeve ground.

8.04 Relays in the DNI port circuit, controlled by the DNI port control and the call processor, determine the operating mode of the port. In addition to providing a path through the port for normal call data, the relays perform various signaling and test-related functions.

a. The cutthrough relay is operated by the DNI port control after a path has been marked through the concentration network and held by sleeve ground. The cutthrough relay applies transmission battery and ground to the subscriber loop through the coils of the CB relay and the basic audio interface, operating the CB relay. The cutthrough relay also works in conjunction with the ringing relay in making ANI party tests.

b. The CB relay monitors the loop status and repeats dial pulses on the loop by operating and releasing as the loop is closed and opened. Contacts of the relay provide sense inputs of either +5 volts or ground to the DNI port control, depending on loop status. The DNI port control reacts by sending appropriate signals to the other relays, PGC I, or the concentration network.

c. The ringing relay is controlled by a control bit from PGC I by way of the DNI port control. This relay is used to apply ringing to the line and, in conjunction with the cutthrough relay, to make ANI party tests.

d. The reverse relay is activated by a control bit from PGC I by way of the DNI port control. The reverse relay is used to reverse the tip and ring leads of the DNI subscriber line. This feature is required to provide answer supervision on calls to a DNI subscriber and also to apply ringing to the tip lead, when required, for divided-ringing party lines.

e. The test access relay also operates under control of PGC I by way of the DNI port control. Operation of the relay permits test access out toward the subscriber and inward through the DCO.

9. E & M TRUNK CIRCUITS

9.01 Two-to-Four-Wire Circuit .

a. This E & M trunk circuit provides a controlled interface between the DCO switching system and interoffice trunk facilities that enter the office and are terminated at the MDF. Each trunk circuit is arranged for a 2-to-4-wire mode of transmission with two wires connected to the external trunk (at the CDF) and four wires to the switching system. Two E & M trunk circuits and associated CODEC circuits are contained on one E & M trunk PWBA 814293-026. Each trunk circuit can have either Type I or Type II E & M signaling leads through a strapping arrangement. Another strapping arrangement allows for 600- or 900-ohm termination.

b. Two-way analog signals on the tip and ring leads are converted to two 1-way (send and receive) analog signals. These signals are converted to/from PCM digital bit streams in the CODEC circuit before/after processing by the switching system. See figure 5.

c. Under direction of the PGC circuit, the E & M trunk circuit allows test access of the tip, ring, and E & M leads. Control from the PGC can also generate outgoing signals on the M lead.

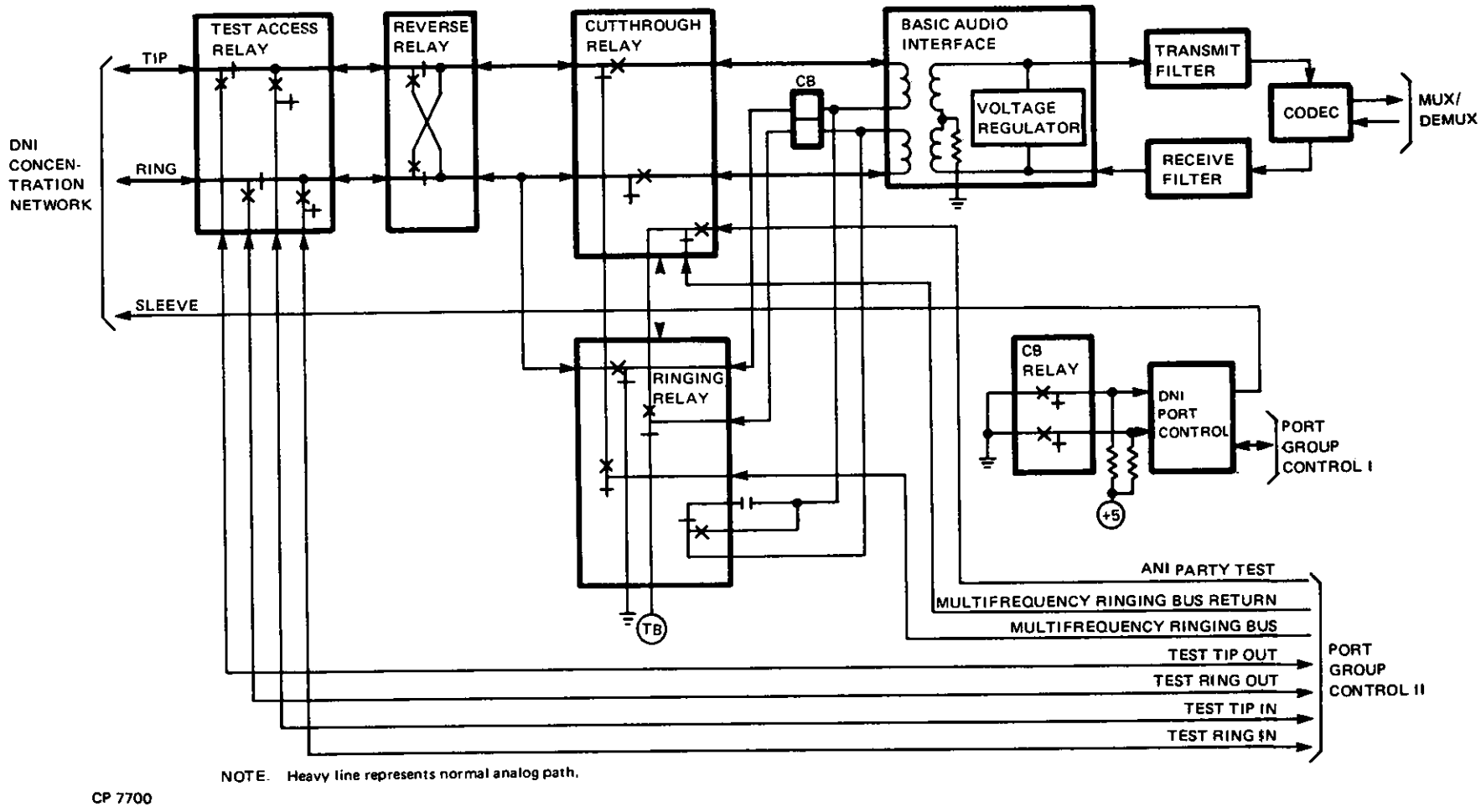

Figure 4. DNI Port Circuit, Block Diagram

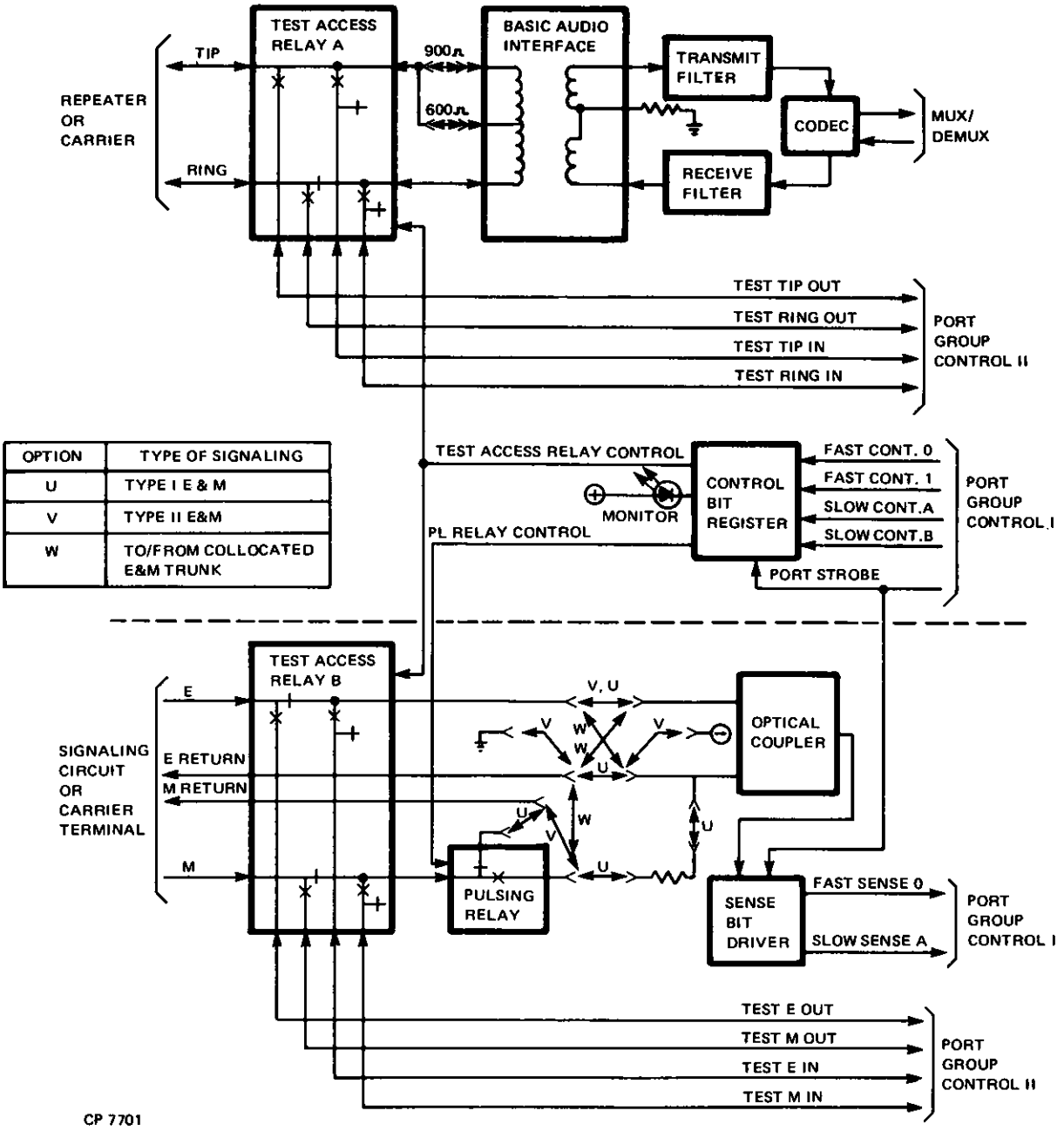

Figure 5. Two-to-Four Wire E & M Trunk Circuit, Block Diagram

d. Figure 5 shows the voice, signaling, and test paths through the trunk circuit. Relays in each trunk circuit are operated by supervisory control bits from the port control system (PCS). The pulsing relay is used in interoffice signaling on the signaling leads. The test access A relay provides test access to the tip and ring leads. Similarly, the test access B relay provides test access to the signaling leads.

e. Analog voice signals received from a local or distant office on the tip and ring leads of the E & M trunk circuit are terminated in a basic audio interface. This circuit transfers the signals on the bidirectional tip and ring leads to unidirectional transmit and receive lines to and from the CODEC circuit.

f. Signaling from the trunk circuit to another office is done using the pulsing relay. When operated, this relay switches from ground to –48V on the M lead in a Type I interface. In a Type II interface, the relay closes the loop formed by the M and M-return leads. Return signaling is detected on the E lead in a Type I interface and on the loop formed by the E and E-return leads in a Type II interface. In either type of

circuit, detection of return signaling generates fast sense bit 0 that is sent to the PGC I circuit when a port strobe is addressed to the trunk circuit. Slow sense bit A is sent to the PGC I as an indication that the trunk circuit is installed in the system.

g. Test access relays A and B provide test access to the voice path and to the signaling path, respectively. The test access A relay breaks the tip and ring leads just outside the basic audio interface. It then switches the line side of tip and ring to the test-tip-out and test-ring-out leads, respectively. It connects the equipment side of tip and ring to the test-tip-in and test-ring-in leads, respectively. These connections allow the line side and the equipment side to be tested independently.

h. The test access B relay breaks the E lead and switches the line side to the test-E-out lead and the equipment side to the test-E-in lead. At the same time, the relay breaks the M lead and switches the line side to the test-M-out lead and the equipment side to the test-M-in lead. Thus, the line side and the equipment side of each signaling lead can be tested independently.

i. A failure of any component on the PWBA normally affects only the single associated trunk circuit. A component failure can affect incoming supervision and signaling, outgoing supervision and signaling, transmission, testing, and/or miscellaneous metering. Normally, a failure of one or two trunk circuits is considered to be a minor failure.

9.02 Four-Wire Circuit.

a. This E & M trunk curcuit is used to interface a collocated four-wire carrier channel or a collocated single-frequency signaling system to the DCO switching system. Two trunk circuits and associated CODEC circuits are contained on one four-wire E & M trunk PWBA 814525-026. Each circuit can be strapped for either Type I or Type II E & M signaling.

b. Two-way analog signals on the tip and ring transmit and receive leads are converted to two 1-way (send and receive) analog signals. These signals are converted to/from digital bit streams in the CODEC circuit before/after processing by the switching system. See figure 6.

c. Under direction of the PGC circuit, the E & M trunk circuit allows test access of the tip, ring, and E & M leads. Control from the PGC can also generate outgoing signals on the M lead.

d. Figure 6 shows the voice, signaling, and test paths through the trunk circuit.

e. Analog voice signals received from signaling or carrier equipment on the tip and ring transmit (TT and RT) leads are transferred through the transmit repeat coil, attenuator, and filter to the CODEC circuit. The attenuator is used to meet the level requirements of the filter and CODEC circuits.

f. The digital signals from the mux/demux are converted to analog form by the CODEC. The analog signal is filtered and then transferred through the attenuator and repeat coil to the tip and ring receive (TR and RR) leads. The receive attenuator is used to meet the level requirements of the four-wire trunk.

g. Signaling from the trunk circuit to the carrier or signaling equipment is done using the pulsing relay. When operated, this relay switches from ground to −48V on the M lead in a Type I interface. In a Type II interface, the relay closes the loop formed by the M and M-return leads. Return signaling is detected on the E lead in a Type I interface and on the loop formed by the E and E-return leads in a Type II interface. In either type of circuit, detection of return signaling generates fast sense bit 0 that is sent to the PGC I circuit when a port strobe is addressed to the trunk circuit. Slow sense bit A is sent to the PGC I circuit as an indication that the trunk circuit is installed in the system.

h. Test access relays provide test access to both the voice and signaling paths. Test access relay A breaks the E lead and switches the port side to the test-E-in (TEI) lead and the equipment side to the test-E-out (TEO) lead. At the same time, the relay breaks the M lead and switches the port side to the test-M-in (TMI) lead and the equipment side to the test-M-out (TMO) lead. Thus, the port side and the equipment side of each signaling lead can be tested independently.

i. Test access relay B breaks the TR and RR leads and switches the test-transmit-in (TTI) lead to the port side of lead TR and the test-receive-in (TRI) lead

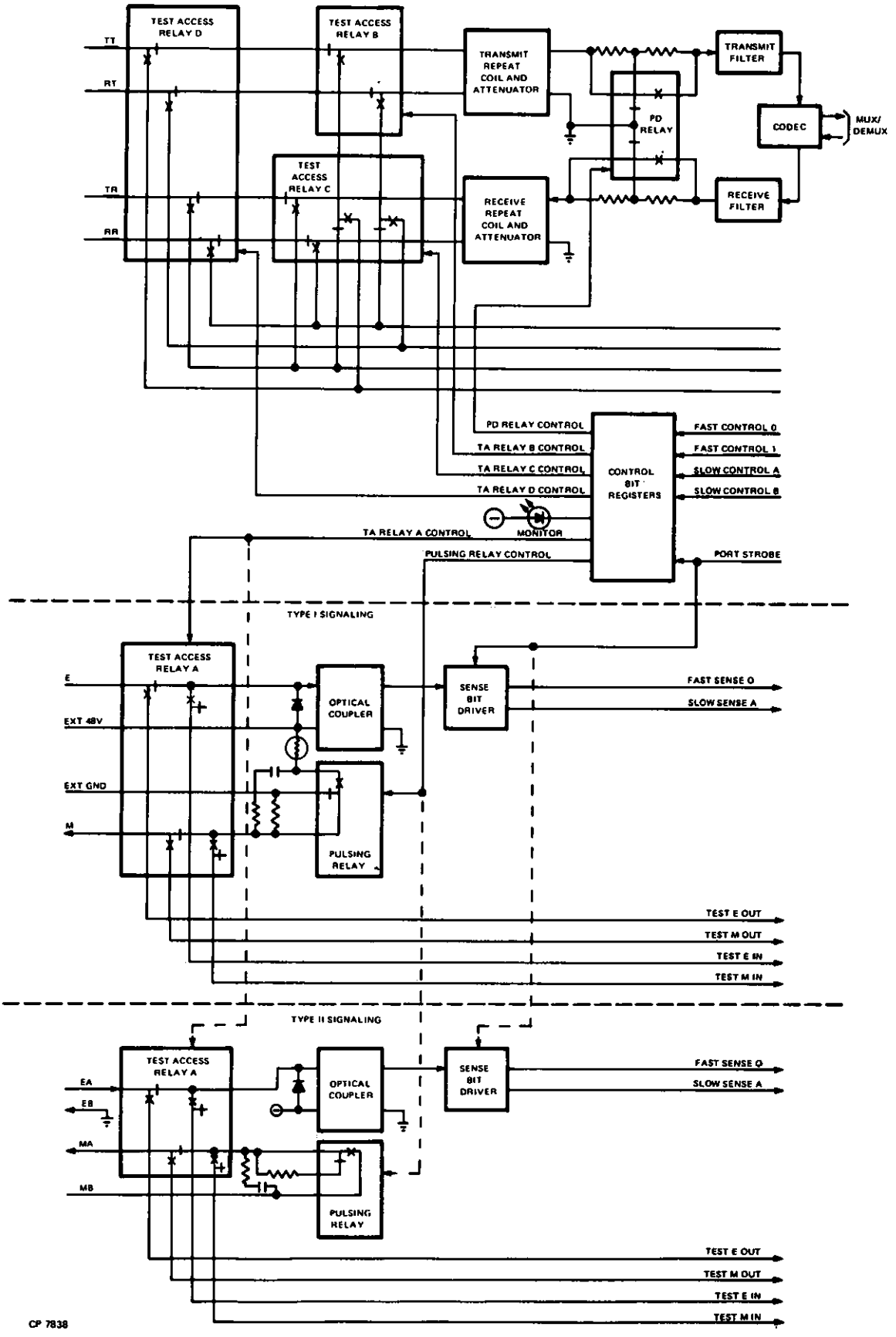

Figure 6. Four-Wire E & M Trunk Circuit, Block Diagram

to the port side of lead RR. This allows leads TTI and TRI to access the receive path only.

j. Test access relay C breaks the TT and RT leads and switches lead TTI to the port side of lead TT and lead TRI to the port side of lead RT. This allows leads TTI and TRI to access the transmit path only.

k. Relay TD breaks leads TR, RR, TT, and RT and switches leads TTO, TRO, TTI, and TRI to the equipment side of leads TR, RR, TT, and RT, respectively.

l. A failure of any component on the PWBA normally affects only the single associated trunk circuit. A component failure can affect incoming supervision and signaling, outgoing supervision and signaling, transmission, testing, and/or miscellaneous metering. Normally, a failure of one or two trunk circuits is considered a minor failure.

10. LOOP REVERSE-BATTERY TRUNK CIRCUIT

10.01 The loop reverse-battery trunk circuit serves as a controlled interface for two-way communications between the DCO switching system and a loop reverse-battery trunk from another office. Each trunk circuit is arranged for a 2/4-wire mode of transmission with two wires connected to the external trunk (at the MDF) and four wires to the switching system. One trunk circuit is provided on each loop reverse-battery trunk circuit PWBA 814294-026.

10.02 The basic circuitry and the normal data path through this circuit are shown in the general block diagram provided in figure 7. The bidirectional tip and ring voice path is terminated in the basic audio interface circuit. Here, the bidirectional paths are converted to unidirectional transmit and receive lines that carry analog data to or from the CODEC circuit on the trunk PWBA. The CODEC converts the analog data being sent from the trunk to digital data for transmission through the TSI. For data transfers from the TSI to the trunk, the CODEC converts digital data bits to analog signals.

10.03 Software-controlled relays determine the operating mode of the loop reverse-battery trunk circuit. The relays shown in the block diagram are standard in each loop reverse-battery trunk circuit. In addition to providing a path through the trunk circuit for normal call data, the relays in the circuit do various signaling and test-related functions. The reverse relay reverses the polarity of the tip and ring leads as a way of signaling the other office. The pulsing relay is used for outpulsing to the other office. The outgoing relay transfers the trunk from incoming call service to outgoing call service; it disconnects battery and ground from the loop and switches the pulsing relay into the loop to make pulsing possible. The shunt relay allows the overall inductance in the loop to be reduced during outpulsing to ensure accurate signals at the receiving end. The CB relay is the detector of incoming off-hook signals on the loop. For testing purposes, the test access relay is the device for splitting the incoming and outgoing tip and ring leads and for monitoring or inserting test signals.

10.04 A failure of any component on the PWBA affects only the trunk circuit. A component failure can affect incoming supervision and signaling, outgoing supervision and signaling, transmission, testing, and/or miscellaneous metering. Normally, a failure of a trunk is considered to be a minor failure.

11. BATTERY- AND GROUND-PULSING LOOP TRUNK CIRCUIT

11.01 This trunk is similar to the loop reverse-battery trunk previously described, except that during outpulsing it pulses resistance battery and resistance ground to the T and R leads, respectively, of the distant office, to enable operation over longer loops (up to 2000 ohms) than with loop pulsing. One trunk circuit is provided on each PWBA 814295-026.

11.02 The basic circuitry and the normal data path through it are shown in the block diagram in figure 8. Software-controlled relays determine the operating mode of the trunk circuit. The six relays shown in the block diagram are standard in each trunk circuit. In addition to providing a path through the trunk circuit for normal call data, the relays in the circuit do various signaling and test-related functions. The reverse relay reverses the polarity of the tip and ring leads as a way of signaling the other office. The pulsing relay is used for outpulsing to the other office. The outgoing relay transfers the trunk from incoming call service to outgoing call service; it disconnects battery and ground from the loop and prepares the pulsing relay contacts for pulsing. On outgoing calls, the shunt relay (by way of contacts of the pulsing relay) switches resistance battery and resistance ground to the T and R leads, respectively, to the

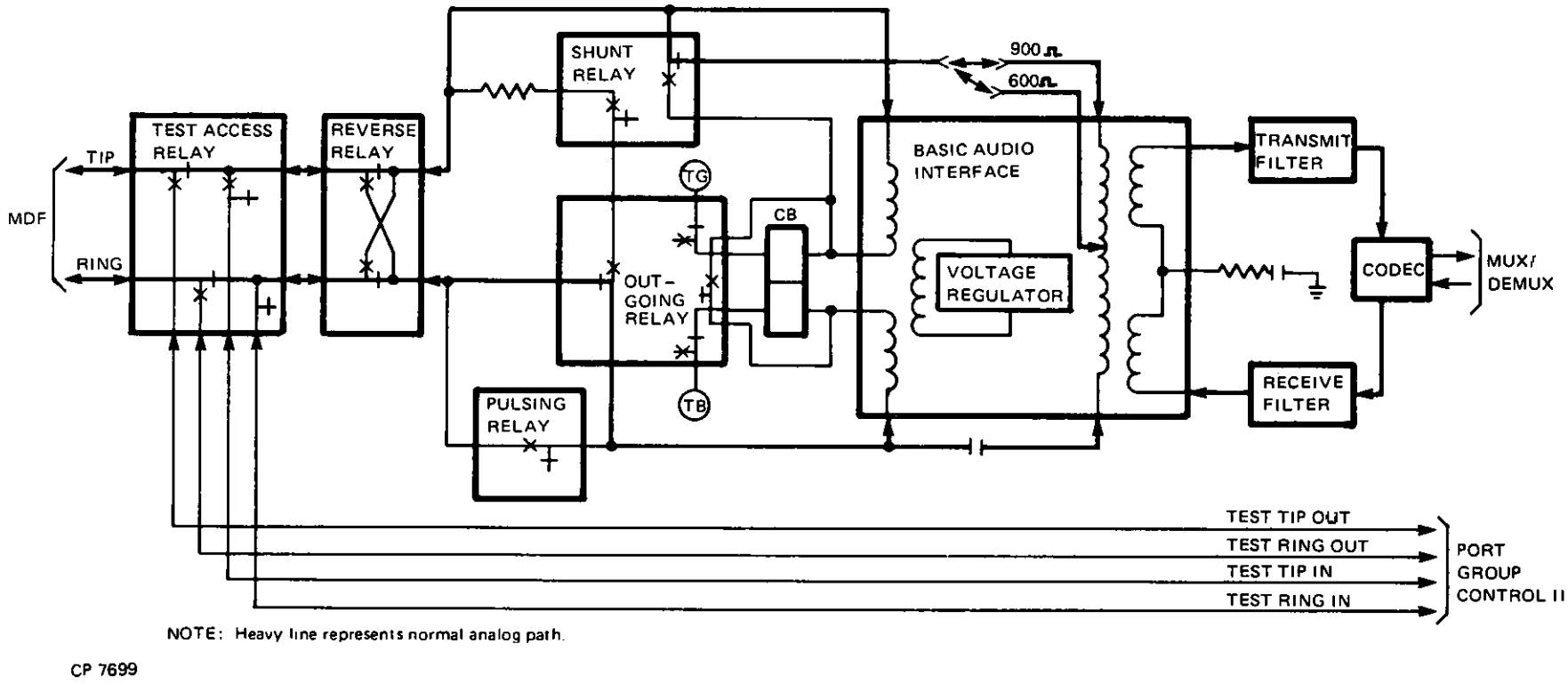

Figure 7. Loop Reverse-Battery Trunk, Block Diagram

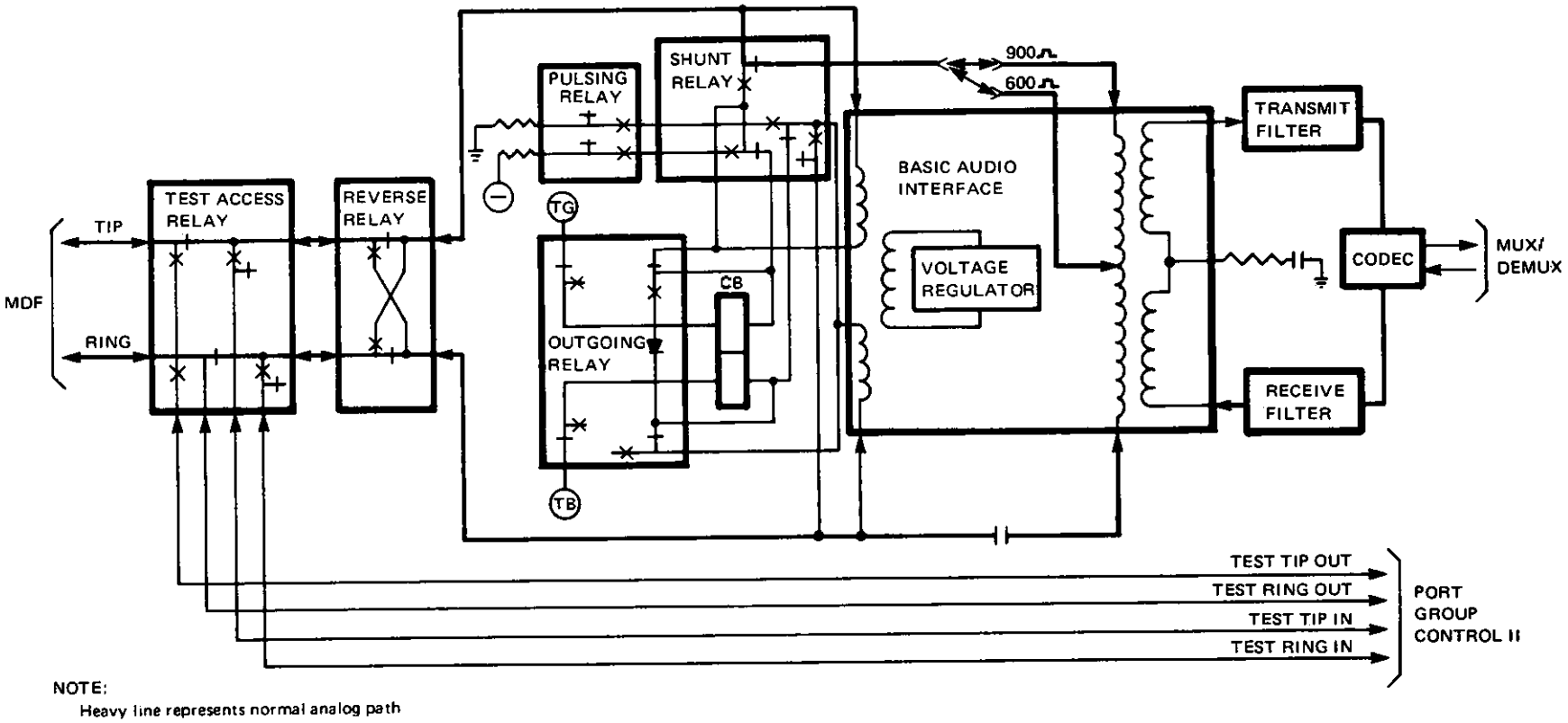

Figure 8. Battery- and Ground-Pulsing, Loop Trunk, Block Diagram

distant office. On incoming calls, it allows the overall inductance in the loop to be reduced during outpulsing to ensure crisper signals at the receiving end. The CB relay is the detector of incoming off-hook signals on the loop. The test access relay provides for splitting the incoming and outgoing tip and ring leads and monitoring or inserting test signals.

11.03 The bidirectional tip and ring voice path is terminated in the basic audio interface circuit. Here the bidirectional paths are converted to unidirectional transmit and receive lines that carry analog data to or from the CODEC circuit. The CODEC converts the analog data being sent from the trunk to digital data for transmission through the TSI. For data transfer from the TSI to the trunk, the CODEC converts digital data bits to analog signals.

12. STEP-BY-STEP INCOMING TRUNK CIRCUIT

12.01 The step-by-step (S x S) incoming trunk serves as an interface between S x S analog switching equipment and a DCO digital switching system, both located in the same office. The trunk provides only one-way incoming service since the loop can be seized only by S x S equipment for incoming calls. One trunk circuit is provided on each S x S trunk circuit PWBA 814296-026.

12.02 Four leads are provided to the S x S equipment by each trunk circuit. In addition to the tip and ring leads for handling voice and pulsing, the circuit provides a sleeve (S) lead and a helping sleeve (HS) lead. The S lead is a holding circuit for the S x S switching mechanism. The HS lead carries supervisory signals for those S x S installations requiring more than reverse-battery supervision. As shown in the general block diagram in figure 9, the tip, ring, S, and HS leads are terminated at relays in the trunk circuit. The tip and ring leads are terminated in the CB relay by way of contacts of the RV relay. The S and HS leads are terminated in contacts of the RD relay and the RV relay, respectively.

12.03 The test access relay allows for testing of the tip, ring, S, and HS leads. The RV relay reverses battery and ground between the tip and ring leads for those S x S installations that recognize loop supervision. For other types of S x S equipment requiring a separate line for supervision, the RV relay is used for signaling by way of the HS lead. The CB relay detects off-hook conditions originating in the S x S equipment.

12.04 The analog signal from the S x S equipment is switched through the RV relay and then transferred from the bidirectional tip and ring leads to the unidirectional transmit line in the basic audio interface circuit. The CODEC converts the analog signal to digital form for transfer through the PGC to the TSI. During voice transfers in the opposite direction, digital data bits are converted to an analog signal by the CODEC. The analog signal on the unidirectional receive line is transferred to the bidirectional tip and ring leads by the basic audio interface circuit. Tip and ring are then switched through RV relay contacts and out to the S x S equipment.

13. STEP-BY-STEP OUTGOING TRUNK CIRCUIT

13.01 The S x S outgoing trunk serves as an interface between S x S analog switching equipment and a DCO digital switching system, which are located in the same office. The trunk provides only one-way outgoing service because it interconnects with either an incoming selector or preselector of the S x S trunk. One trunk circuit is provided on each S x S trunk circuit PWBA 814297-026.

13.02 Four leads are provided to the S x S equipment by each trunk circuit. In addition to the tip and ring leads for handling voice and pulsing, the circuit provides an S and an HS lead. The DCO uses the S lead to seize the S x S equipment by way of the SS relay. The S x S equipment grounds the S lead when seized or when its incoming selector or preselector is out of service. The HS lead is used when the S x S equipment provides resistance battery answer supervision on the HS lead. As shown in the general block diagram in figure 10, the tip and ring leads are terminated in relay SR and the S and HS leads are terminated in optical couplers, which provide supervisory sense bits.

13.03 The test access relays allow for testing of the tip, ring, sleeve and helping sleeve leads, both out to the S x S equipment and in toward the DCO. The pulsing relay is used for outpulsing to the S x S equipment. The shunt relay reduces the overall inductance in the loop during outpulsing to ensure accurate signals at the S x S equipment. If reverse-battery answer supervision is provided by the S x S equipment, relay SR operates to generate a supervisory sense bit.

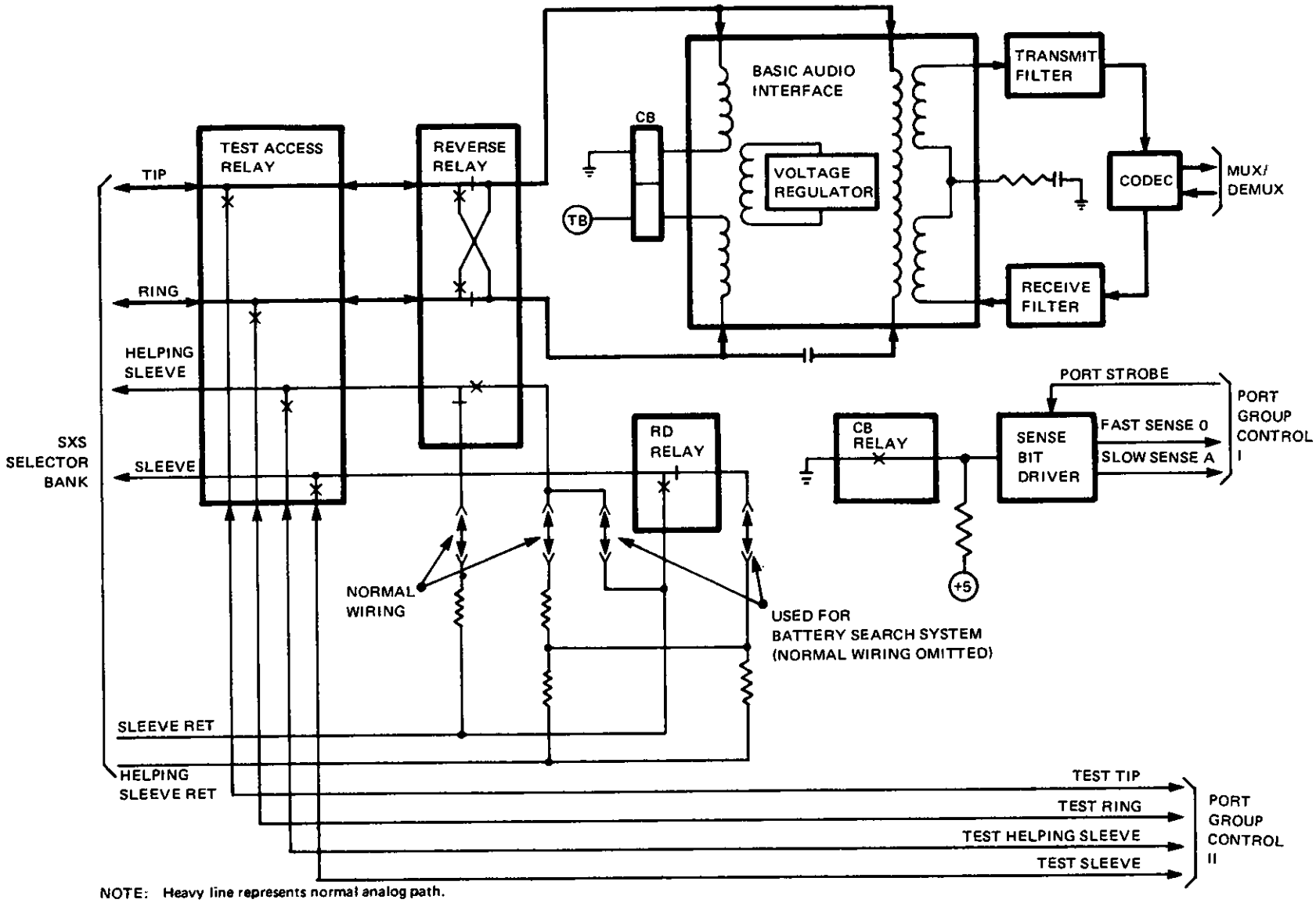

Figure 9. Step-by-Step Incoming Trunk, Block Diagram

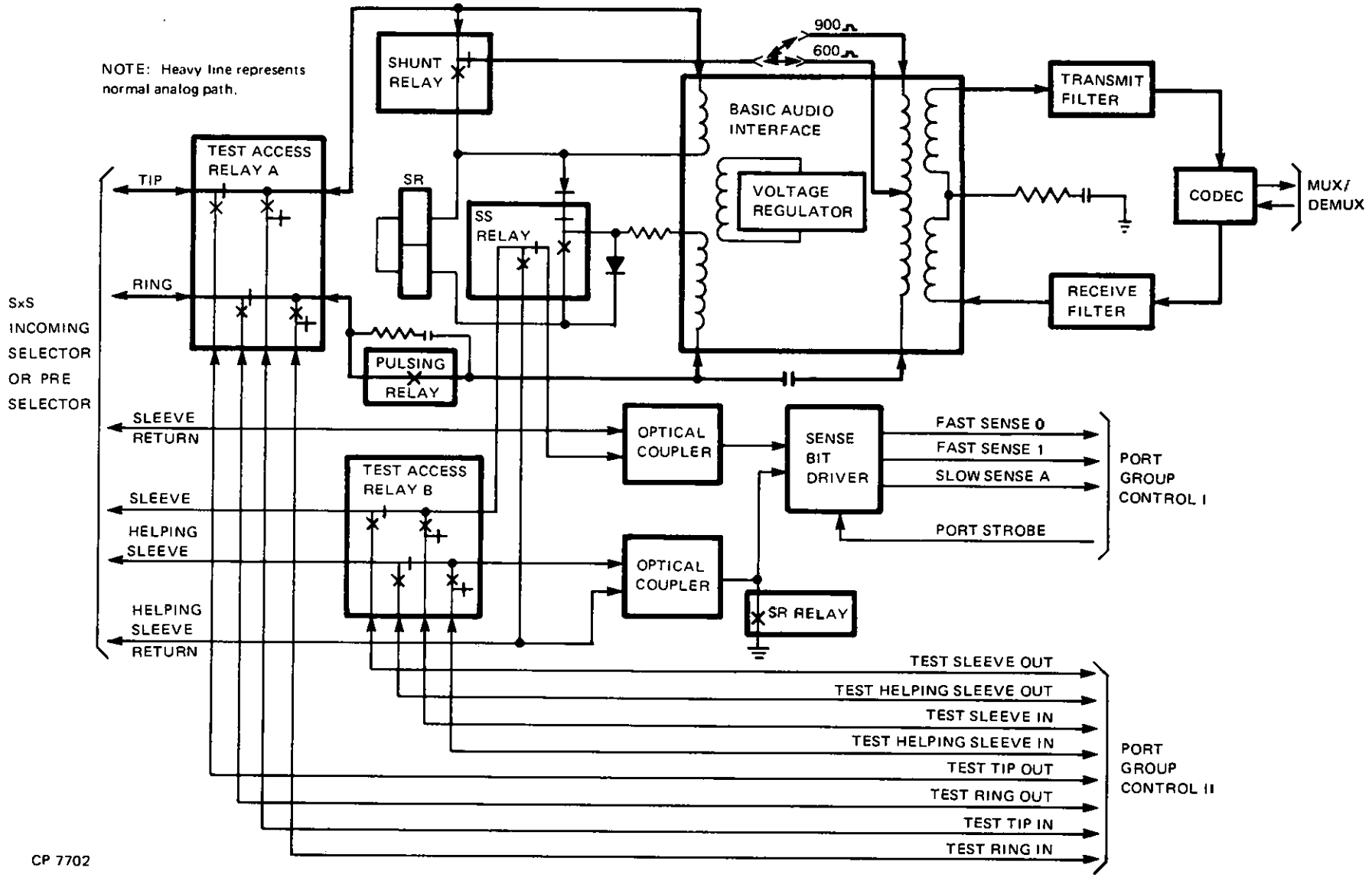

Figure 10. Step-by-Step Outgoing Trunk, Block Diagram

13.04 The analog signal from the S x S equipment is switched through test access relay A and then transferred from the bidirectional tip and ring leads to the unidirectional transmit line in the basic audio interface circuit. The CODEC converts the analog signal to digital form for transfer through the PGC to the TSI. During voice transfers in the opposite direction, digital data bits are converted to an analog signal by the CODEC. The analog signal on the unidirectional receive line is transferred to the bidirectional tip and ring leads by the basic audio interface circuit. Tip and ring are then switched through RV relay contacts and out to the S x S equipment.

14. DIGITAL TRUNK INTERFACE

14.01 General.

a. The Digital Trunk Interface (DTI) provides the means for the internal digital network of the DCO to directly interface with a T-1 carrier span on a digital basis. Direct connection to the T-1 span line eliminates the need for PCM carrier channel banks and analog trunk circuits.

b. The DTI can be used to interface the DCO to trunks from any distant analog central office that is equipped with D2/D3 channel banks, or from any distant DCO that contains a D2/D3-compatible direct T-1 interface. If the distant central office is part of a synchronous digital network, a synchronous network clock must be installed with the DCO common equipment. The clock ensures that all timing signals within the digital network occur at the correct rate.

c. The basic function of the DTI is to provide data rate and data format conversions for the digital signals that are sent between the DCO and the T-1 carrier system. Pulse-code modulated signals that are transmitted over T-1 span lines are in bipolar form at a 1.544 megabit-per-second (Mb/s) rate. The DCO, however, uses a 2.048 Mb/s rate in non-return-to-zero (NRZ) form. The DTI transforms the rate and format of the received T-1 data to that used by the DCO, and, for transmission in the opposite direction, converts the digital signals from the DCO to the rate and format required by the T-1 carrier span.

d. Each DTI cell in a DCO line/trunk frame serves one 24-channel, T-1 span line. Four PWBAs make up one DTI, as described in paragraphs 14.02 through 14.05. See figure 11.

14.02 DTI Interface.

The DTI interface PWBA 814503-526 provides transformer isolation of the T-1 span and functions as a buffer between the DTI and the port group highway (PGH) of the DCO. The circuit converts outgoing data from NRZ to bipolar form, converts incoming data from bipolar to NRZ form, and regenerates the incoming T-1 clock signal. A red light-emitting diode (LED) on the PWBA lights if the received clock signal is not synchronized with the PGH clock. Another red LED lights when the DTI is in the loop-back mode, which is used for testing.

14.03 T-1 Receiver.

The T-1 receiver PWBA 814504-526 transposes the received data to a rate and format that are compatible with the DCO port group highway. A frame synchronizer circuit on the PWBA locks the receiver onto the received data format. A red LED lights when the receiver is not synchronized with the received data. A phase detector is used to compensate for phase errors between the T-1 frame and the PGH frame. The incoming voice signals require attenuation on a per-channel basis as a function of call routing. Digital pads, under control of the DCO call processor, provide the required attenuation.

14.04 T-1 Transmitter.

The T-1 transmitter PWBA 814505-526 transposes data from the PGH to a rate and format that are compatible with the T-1 span. A bits/frame counter and sync generator are used to generate the correct sync bit pattern for transmission. Data from the PGH, after conversion, goes to a data multiplexer and the output is determined by an output decoder. To prevent transmission of all zeros, the data multiplexer output passes through a zero suppressor before being sent to the DTI interface PWBA. An additional function of the T-1 transmitter is to store the attenuation pad values for use by the receiver.

14.05 DTI Diagnostics.

The DTI diagnostics PWBA 814506-526 provides alarm and test capabilities for the DTI. Information received from common equipment alarm indicators is used to initiate diagnostic testing. The diagnostics PWBA contains a data pattern generator for testing the data path of each DTI port. Circuits are also provided to initiate span switching and to do loop-back and frame synchronization tests.

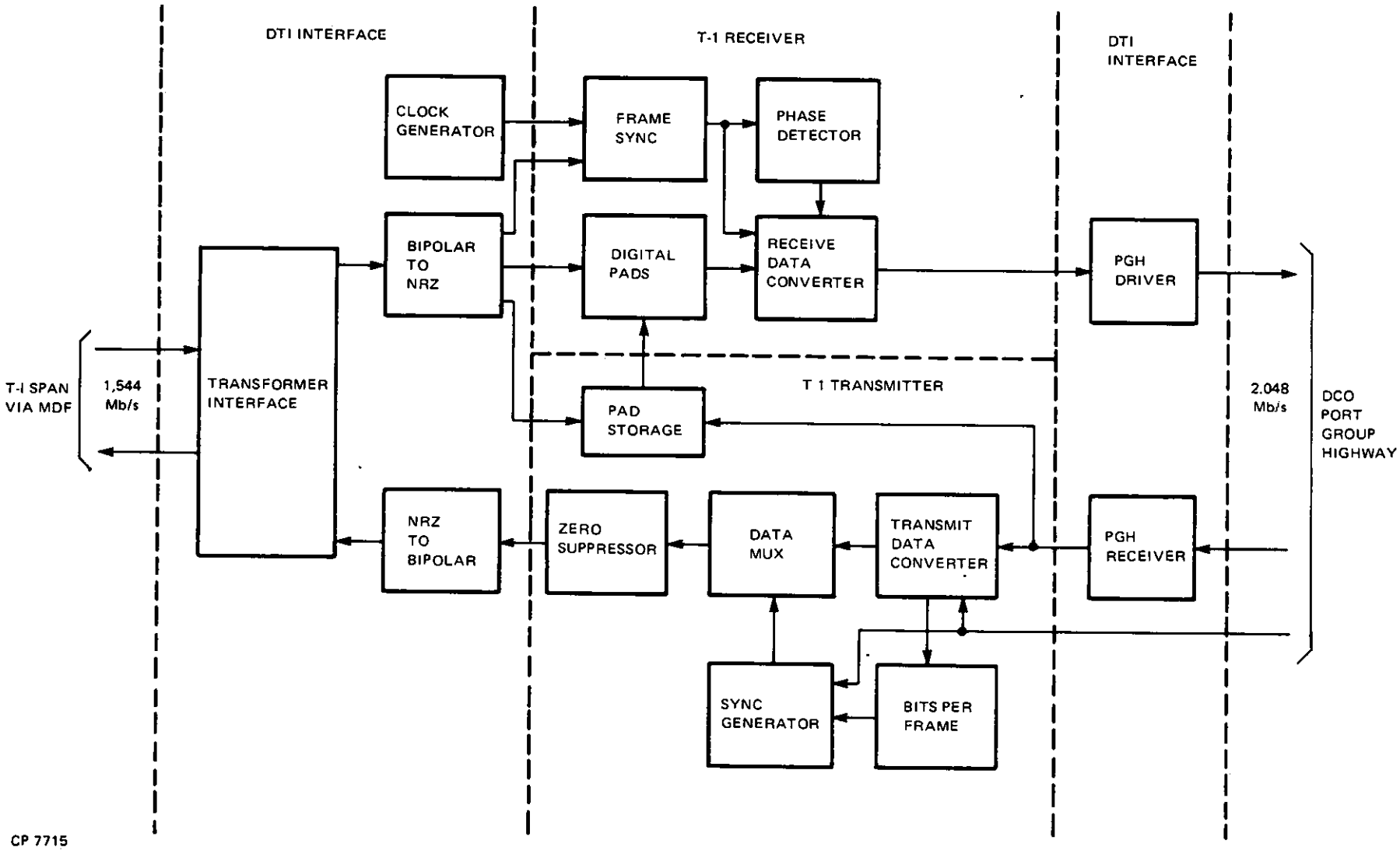

Figure 11. Digital Trunk Interface, Basic Block Diagram

15. BUSY VERIFICATION CIRCUIT

15.01 Busy verification circuits allow an operator to bridge the path between two connected ports, to verify that either or both are busy, and to speak to parties using the monitored ports (3-way conference). These circuits are considered to be service port circuits. One complete busy verification circuit consists of two PWBAs: 814434-026 and 814434-046. Figure 12 shows the difference between a normal call connection and a busy verification connection as well as showing the interconnection of circuits associated with a busy verification call.

15.02 The busy verification circuit consists of three operational amplifiers and three sets of XMT OUT and RCV IN leads. See figure 13. The inputs to each amplifier are the RCV IN signals from the two sets of leads not associated with that amplifier. Each RCV IN signal is the output of one of three CODECs on PWBA 814434-026. The output of each amplifier is an XMT OUT signal, which is the input to one of three CODECs. With this arrangement, two of the sets of busy verification circuit leads are switched into the two conversation paths that provide two-way communication between the two ports to be monitored. Signals on both paths then are fed into the amplifier associated with the third set of leads. This third set of leads is switched to the port that serves the monitoring operator. Thus, the XMT OUT lead from the third set carries voice signals from both monitored ports for transfer to the operator. The RCV IN lead of the third set carries the operators message to the parties on both monitored ports.

15.03 Each of the operational amplifiers has unity gain. A coupling capacitor and voltage divider on the RCV IN analog input provides the proper frequency response and signal level for the amplifier inputs.

15.04 The busy verification circuit is an optional and nonredundant portion of line and/or line and service group cells, using three port positions per cell. A component failure on this circuit never affects service to more than three ports and, therefore, is considered to be a minor failure. A component failure can cause loss of busy verification monitoring and/or loss of voice transmission through up to three ports.

16. TAPE ANNOUNCER CONTROL CIRCUIT

16.01 The functions of a tape announcer control circuit are provided by E & M trunk circuit PWBA 814293-026. The tape announcer control is an interface for termination of calls routed to a tape announcer. It provides start/stop operation of the tape drive and indicates the start of a recorded message to the DCO common control. Calling lines routed to the tape announcer are connected to ringback tone until the message starts. Because the DCO timeslot interchange can connect a single source to any number of ports, the tape announcer control circuit (E & M trunk) is designed so that one tape announcer can serve the entire office (broadcast method). Two identical tape announcer control circuits are provided by each E & M trunk PWBA used for this purpose; each circuit is used for control of a separate tape announcer.

16.02 The voice path (fig. 5) is coupled from the low-impedance output of the tape announcer on the tip and ring leads by test access relay A and the basic audio interface to the CODEC. The 900-ohm wiring option is used to match the impedance of the tape announcer.

16.03 The tape announcer is started by a ground on its START lead, which is connected to the M lead of the E & M trunk. The ground is applied by operating the pulsing relay under control of fast control bit 0 and the port strobe from PGC I. The ground comes from the M RETURN lead by way of wiring option V, which is used when the E & M trunk functions as a tape announcer control.

16.04 With the broadcast method, each calling line routed to the tape announcer is first connected to ringback tone. When the message is about to begin, the tape announcer grounds its PU or SR lead (E & M trunk E lead) to indicate the start of the message. The signal is isolated and coupled by the optical coupler and then makes fast sense bit 0 low when the port strobe pulse is applied. The low sense bit causes the DCO common control to switch all calling lines that are awaiting the start of the message from ringback tone to the message. All calling lines are disconnected at the end of the message.

16.05 While the PWBA is plugged in, slow sense bit A goes low during the port timeslot of each tape announcer control circuit. Removal of the PWBA allows this bit to go high, indicating to the common control that the circuit is out of service.

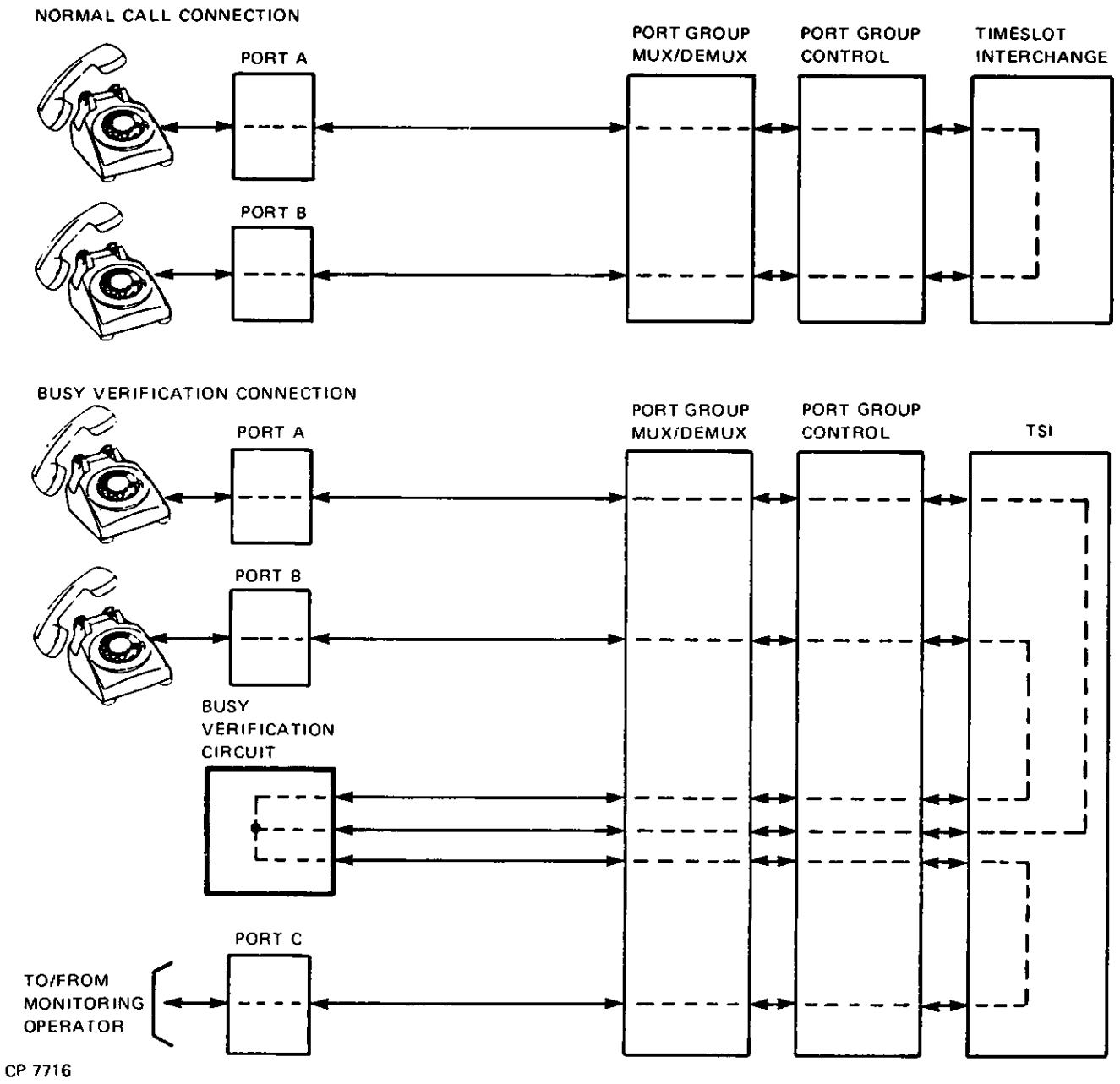

Figure 12. Normal Call Connection Versus Busy Verification Connection

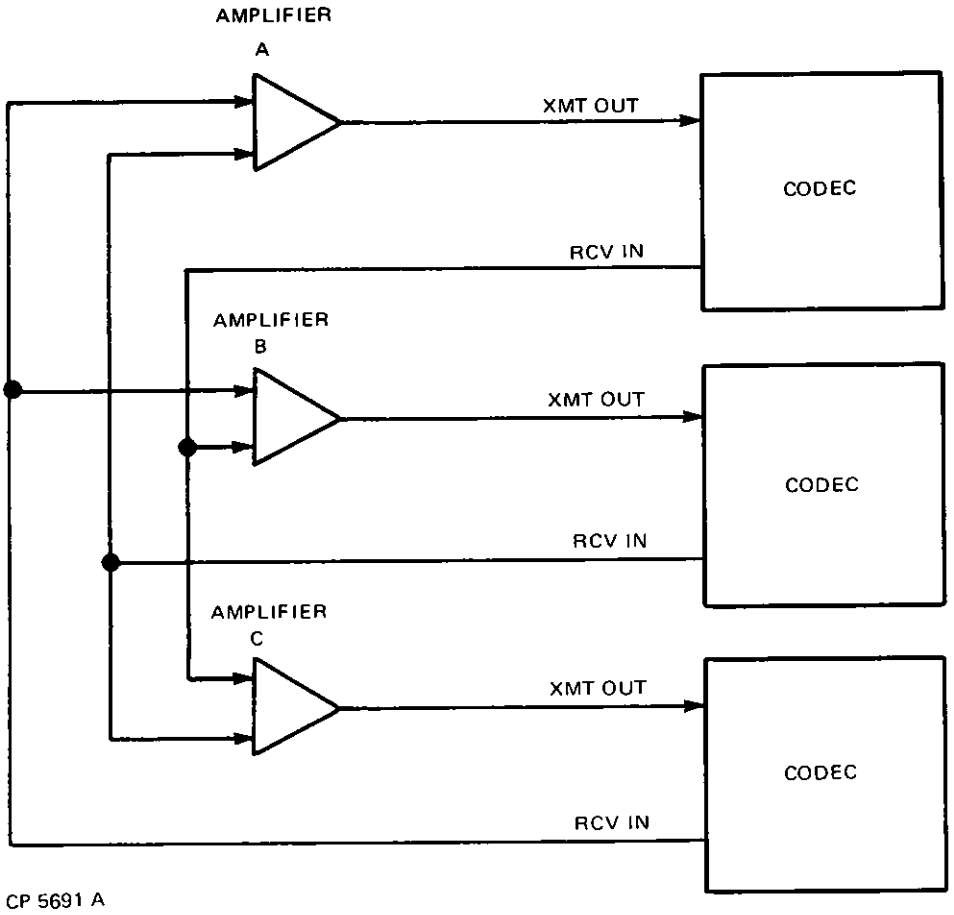

Figure 13. Busy Verification Circuit, Block Diagram

16.06 The tape announcer control (E & M trunk) PWBA is mounted in a trunk group cell in a line/trunk frame; it is nonredundant. A component failure in either circuit on this PWBA normally affects only the associated circuit. Even if both circuits are affected, a circuit failure does not prevent normal telephone operation by the subscriber. Failure of a circuit prevents receipt of the recorded announcement from the associated port.

17. OPERATING LIMITS

17.01 Subscriber Lines.

Table 1 defines the minimum dc insulation resistance and the ringer load for various loop resistance ranges applicable to line circuits used in SYSTEM CENTURY offices; the loop resistance includes the telephone instruments. The dc insulation resistance refers to the minimum resistance between line conductors or between either or both conductors and ground without any line attachments. The ringer load assumes high-impedance ringers and a load that provides adequate loudness of all signals at maximum loop resistance without premature ring trip at minimum loop resistance.

17.02 Party Identification.

A party test, for two- and four-party ANI, can be made successfully through a total path resistance of up to 4100 ohms in the presence of a 5-volt rms ground potential.

17.03 Interoffice Trunks.

a. Trunk Loop Resistance.

The pulse repeater operates over a 2000-ohm loop for loop pulsing and over a 3000-ohm loop for battery and ground pulsing.

b. Trunk/Line Insulation Resistance.

The dc insulation resistance between conductors or between either or both conductors and ground is a minimum of 50,000 ohms.

c. Trunk Release Time.

To guard against reseizure before release, the trunk release time is programable.

Table 1. Subscriber Line Operating Limits

LOOP RESISTANCE	*DC VOLTAGE*	*MINIMUM INSULATION RESISTANCE*	*RINGER LOAD*
0-1500 ohms	44 to 54 volts	15,000 ohms	17 ringers or one 3-line common audible
0-1900 ohms	51.6 to 54 volts	25,000 ohms	10 ringers or one 3-line common audible
1900-4500 ohms	51.6 to 54 volts with loop range extender	100,000 ohms	6 ringers or one 3-line common audible

d. Working Impedance.

With the exception of E & M trunks, the trunk circuits are designed for 900-ohm impedance. E & M trunks are strapable for either 600 or 900 ohms. The four-wire E & M trunk is designed for 600 ohms, only.

17.04 Pulsing Limits.

a. Rotary-Dial Operation.

The equipment operates satisfactorily with subscriber instruments having an operational speed of between 8 and 12 pulses per second and a break period of 55 to 67 percent of the total pulse period.

b. DTMF Operation.

The frequency pairs used for DTMF signaling are shown, with allowable variation in frequency of ±1.5 percent, in table 2.

17.05 On-Hook, Off-Hook Recognition Limits.

a. An on-hook (disconnect) signal of 150 ms or less is not recognized. The standard duration is 180 ms when a hookswitch flash detector is not provided and 2.2 seconds minimum when provided.

b. The off-hook (connect) signal recognition time is 180 ms minimum.

c. The hookswitch flash recognition signal is 200 ms minimum and 2.0 seconds maximum.

18. EQUIPMENT LOCATION

18.01 Port and service port circuits are mounted on PWBAs that are 7.15 inches (18.2 cm) high and 15 inches (38.1 cm) deep. These PWBAs mount in equipment cells that are 24 inches (61 cm) wide, 8.75 inches (22.2 cm) high, and 16 inches (40.6 cm) deep. Cells, in turn, are mounted in equipment frames that are 8 feet (244 cm) high, 31.5 inches (80 cm) wide, and 22 inches (56 cm) deep.

18.02 The locations of all port and service port circuits are provided in the section titled *Equipment Location*, referenced in paragraph 2.02. The following details are applicable to individual cells:

a. The line group cell accepts up to 15 line circuit PWBAs for a maximum of 30 line circuits.

b. The line and service group cell accepts up to 10 line circuit or DCO-DSU line interface PWBAs for a maximum of 20 circuits, and either 4 toll MF sender PWBAs for a maximum of 8 toll MF sender circuits or 4 MFSD interface PWBAs for a maximum of 8 MFSD interface circuits.

c. The trunk group cell accepts up to 15 trunk PWBAs for a maximum of 30 trunk circuits.

d. The paystation line cell accepts up to 15 PWBAs for a maximum of 15 prepay paystation line circuits.

e. The volunteer-fire-alarm cell accepts 1 fire-reporting port circuit, 1 conference circuit, and up to 10 firefighter line circuit PWBAs for a maximum of 20 line circuits.

f. The DNI port cell accepts up to 15 DNI port PWBAs for a maximum of 30 DNI ports.

Table 2. Frequency Pairs Used for DTMF Signaling

LOW FREQUENCY (Hz)	*HIGH FREQUENCY (Hz)*		
	1209	*1336*	*1477*
697	1	2	3
770	4	5	6
852	7	8	9
941	*	0	#

NOTE. Valid tone pulses are present for at least 40 milliseconds, and levels of two tones do not differ by more than 18 dB. Interdigital time intervals are not less than 50 milliseconds.

Cut along Line

READERS COMMENT FORM

Publication No. _____ Issue No. _____ Addendum _____

Title _____

How did you use this publication?

- ☐ Product familiarization
- ☐ Training
- ☐ Installation
- ☐ Maintenance

Other _____

Please check specific criticism(s), give page number(s), and explain below:

- ☐ Clarification on page(s) _____
- ☐ Error on page(s) _____
- ☐ Addition on page(s) _____
- ☐ Deletion on page(s) _____

Comments: _____

Thank you for your cooperation. If a reply is required, please check: ☐

Name _____ Date _____

Your Function _____ Tel. No. _____

Company _____

Address _____

City, State _____ Zip _____

Cut Along Line

Please Tape — Do Not Staple

"Communications for the Information Century"

Cut Along Line

Fold

NO POSTAGE
NECESSARY
IF MAILED
IN THE
UNITED STATES

BUSINESS REPLY MAIL
FIRST CLASS PERMIT NO. 7 SANFORD, FL 32771

POSTAGE WILL BE PAID BY ADDRESSEE

Stromberg-Carlson
400 Rinehart Road
Lake Mary, Florida 32746

Attention: Marketing Communications

Fold

UNITED TECHNOLOGIES STROMBERG-CARLSON

255 S. Orange Avenue, Suite 900
Orlando, Florida 32802

INFORMATION SERVICE BUREAU
Toll Free (1-800) 327-2217

Cut Along Line

Please Tape — Do Not Staple