CONNECTING
DRESSING

CONTENTS

1. INDEX
2. GENERAL
   2.1 Scope
3. INSTALLING EQUIPMENT
4. REQUIREMENTS AND METHODS
   4.1 Dress of Leads

1. INDEX

Subject	Figure	Paragraph
Dress of Leads	1-32	
Battery Distributing Fuse Board	25,27	
Capacitors	1	
Choke Coils, Large	25	
Contactors	2,4	
Fuse Bases	6	
Fuse Blocks - 18A Type	34	
Fuse Blocks - KS-14169	33	
Fuse Blocks - KS-14473, KS-16364 and similar	37	
Fuse Cutouts	5	
Fuse Studs and Panels	7,19,25,27	
Inductors	17	
Information		
Instruments	9,10,39	
Interrupters - Mercury Type	8	
Interrupters - Open Contact	19	
Relays	4,11,12	
Repeating Coils	13,14	
Resistors	15,16	
Rheostats	18,20	
Ringing Machine KS-15532	35	
Ringing Machines (Large)	32	
Shunts - Ammeter	10,21	
Step-By-Step	19	4.15
Switches	22-24,26,28,36	
Terminal Blocks	3,31,40	
Transformers	20,29,38	

2. GENERAL

2.1 Scope

2.11 This section covers the dress and the arrangement for connecting small gauge power wires to various apparatus.

3. INSTALLING EQUIPMENT

3.1 The required tools and supplies are shown in Section 7A.

4. REQUIREMENTS AND METHODS

4.1 Dress of Leads

4.11 The dress of the leads to power boards, ringing power boards, motor-generator sets, unit type power plants, frame lineups, etc. is usually covered by standard equipment drawings for the particular application. Typical drawings showing the dress of leads to crossbar frame lineups, and the arrangement of feeders to the frame fuse panels are:

#1 Crossbar ED-25346-14 & -15.
#4 & #4A Crossbar ED-68066-01.
#5 Crossbar ED-26026-10 & -11.

4.12 If the dress is not covered by standard drawings which have been specified in the job information arrange and dress leads in accordance with Figures 1 to 40. While the arrangements of the various equipment will vary somewhat from the typical illustrations the leads shall, in general, be dressed in a manner consistent with the standard of workmanship applied in these cases, and so that there will be minimum interference with the maintenance of the power equipment. Supplementary information on such items as: design of cable forms, forming, fanning, sewing and skinning, connecting and soldering, placing and supporting cable forms,

This section includes material from BSP AA618.201 and AA612.021
Copyright 1953 & 1954 and 1959 by American Telephone and Telegraph Company
Printed in U.S.A.

protecting cable forms and skinners, splicing, strapping and dressing will be found in other sections of this handbook and in the Wiring and Connecting Handbook.

4.13 The dress of skinners to any particular piece of apparatus not illustrated herein shall agree as nearly as possible with the dress shown on the illustrations of apparatus, the connections of which are most closely resembled.

4.14 Dress wires so they do not interfere with covers, doors or other enclosing devices.

4.15 Tie unused branch leads of switch frame feeder assemblies for step-by-step panels to the No. 6 drop leads below their associated KS-5537 parallel connectors except the bottom leads at the No. 1 position. The No. 1 leads shall be brought upwards and tied above the connector. Tie these branch leads with two strands of No. 6 twine or nylon twine. Use a starting stitch and end with a square knot.

→ Arrowed lines indicate new or changed information.

Vertical lines at side of paragraphs indicates requirements.

R. W. HILLEGAS

Engineer of Installation

ATTACHMENT

Figures 1 to 40 on Pages 3 to 15.

Reason for Reissue:

(1) To add vertically mounted arrangement for 5 and 6 type fuse posts in Figure 7.
(2) To show new dress for 18 and 19 type resistors in Figure 15.
(3) To add Figures 33 thru 40.

Replaces Section 7B dated 11-20-58.

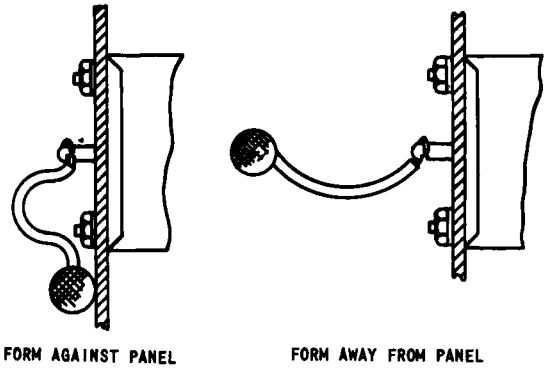

FIG. 1 CAPACITORS - KS-8025 AND SIMILAR SMALL ELECTROLYTIC - NO. 14 AND SMALLER WIRE

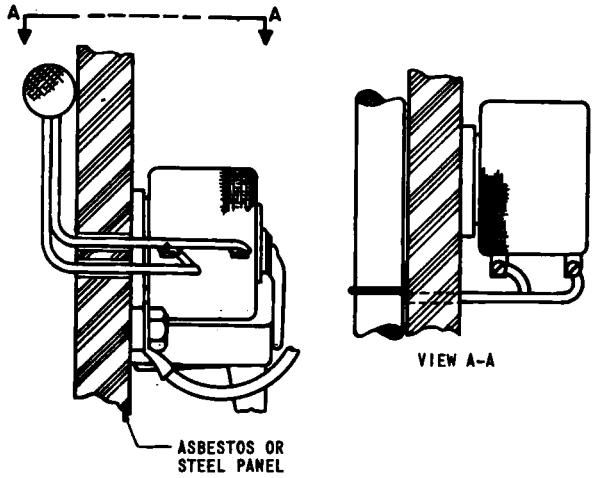

FIG. 2 CONTACTORS - KS-5323-01 AND SIMILAR TYPES WIRING OF FRONT MOUNTED, REAR WIRED POTENTIAL COILS - NO. 14 AND SMALLER WIRE

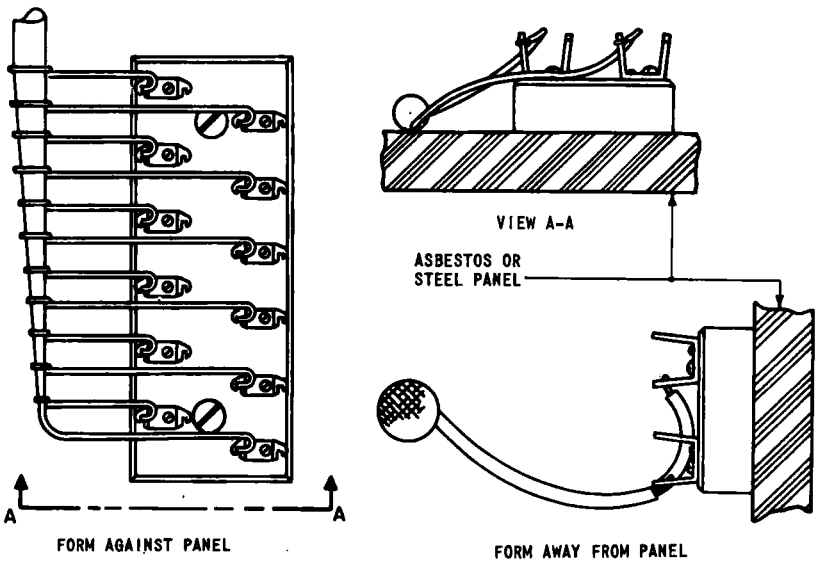

FIG. 3 CONNECTING BLOCKS - ED-80504-01 AND SIMILAR TYPES - NO. 14 AND SMALLER WIRE

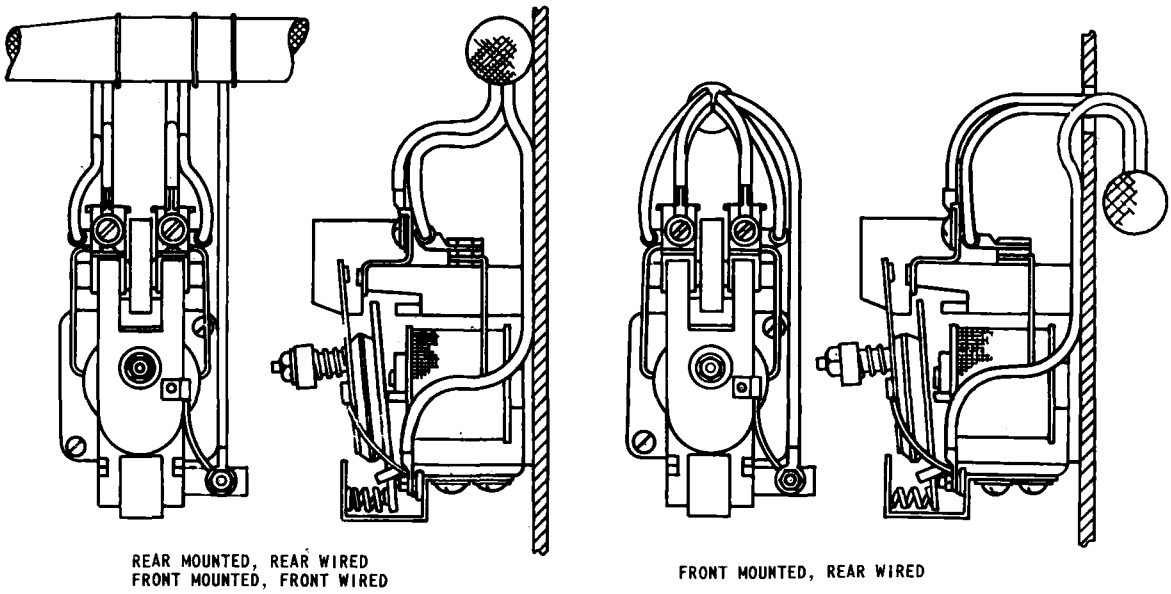

FIG. 4 CONTACTORS AND RELAYS - SMALL CONTROL - NO. 14 AND SMALLER WIRE

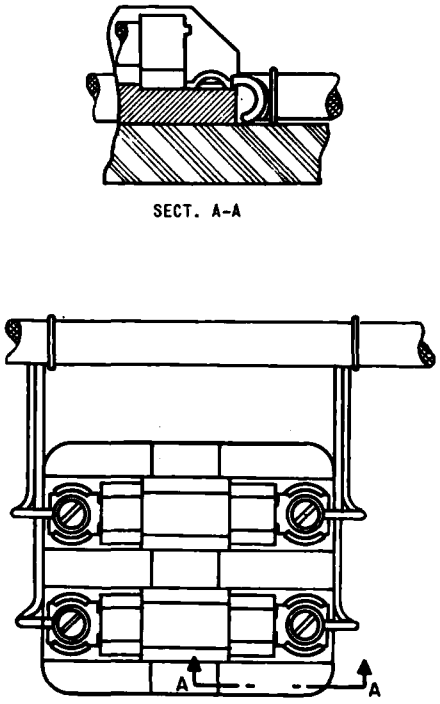

FIG. 5 FUSE CUTOUTS - NO. 14 AND SMALLER WIRE

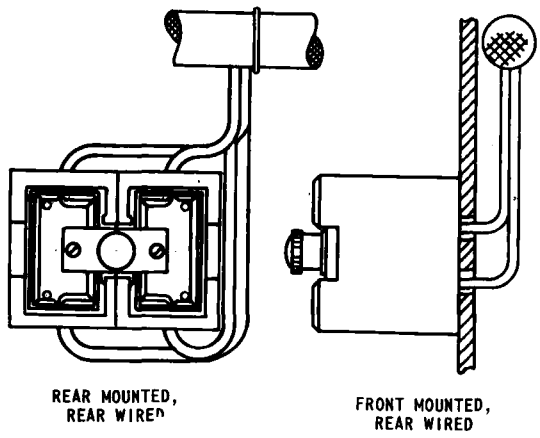

FIG. 6 FUSE BASES - SAFTOFUSE FLAT BASE UNITS - ALL SIZES OF WIRE

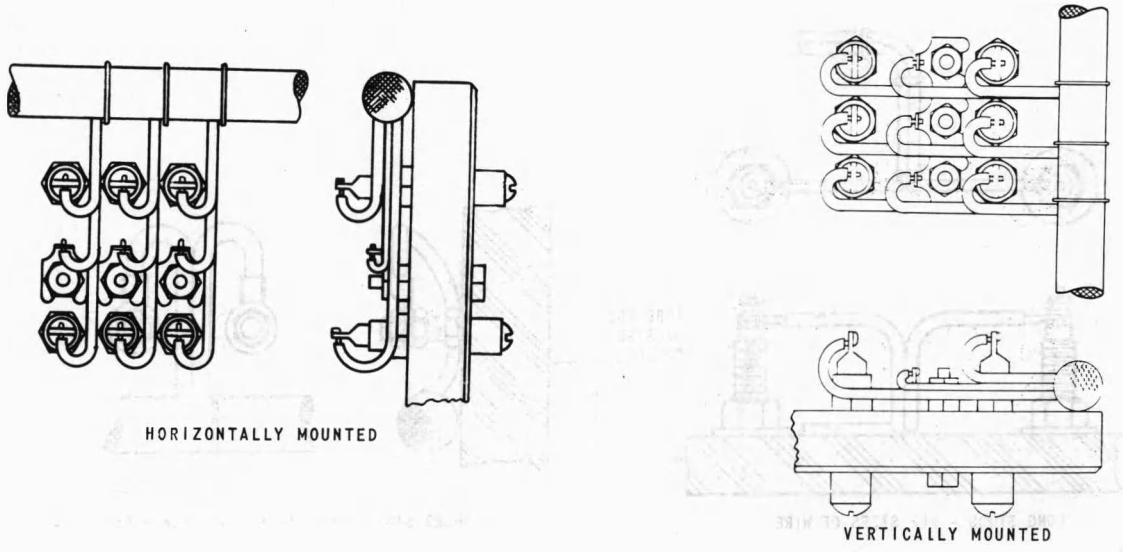

FIG. 7 FUSE POSTS - W.E. CODED TYPE - NO. 14 AND SMALLER WIRE

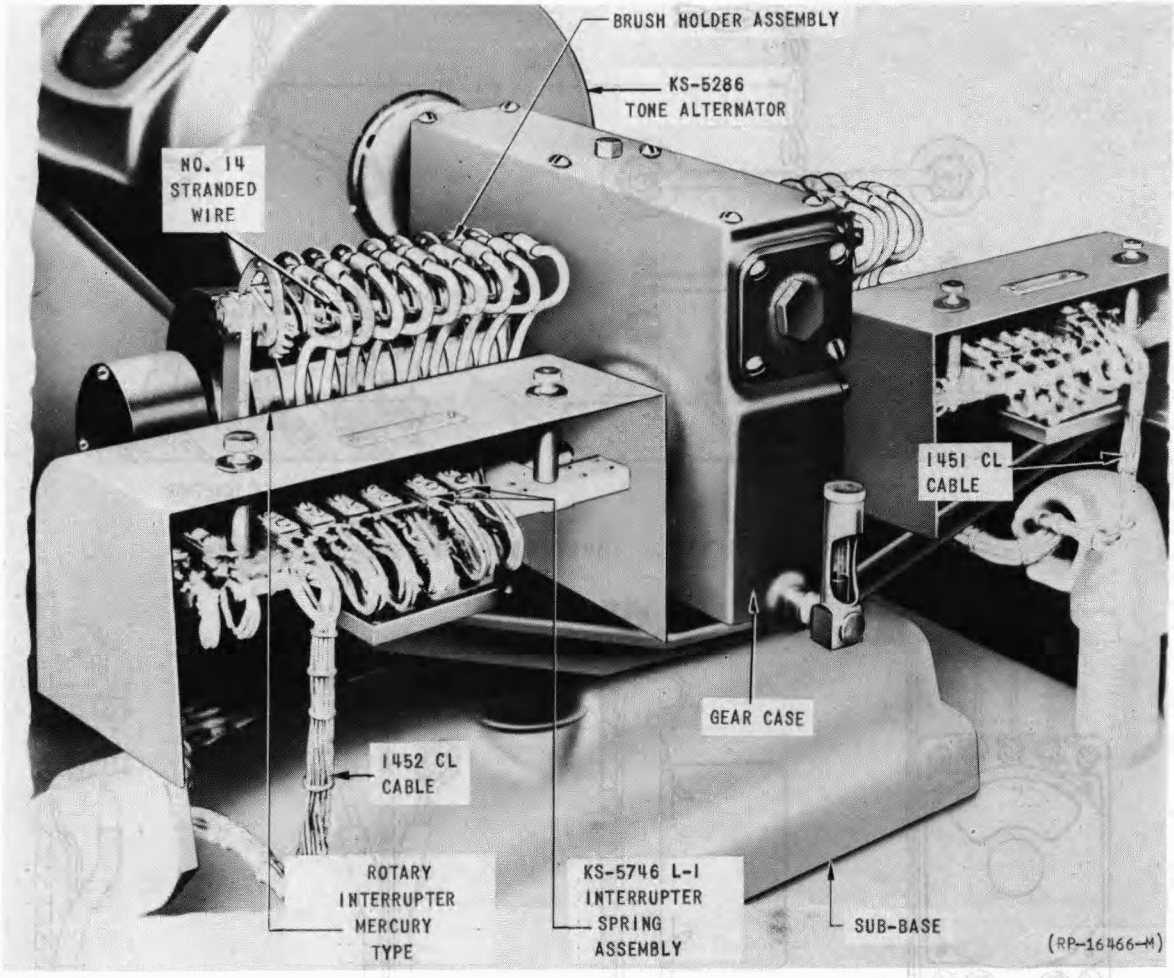

FIG. 8 DRESS OF LEADS TO MERCURY TYPE AND KS-5476 INTERRUPTERS FOR NO. 5 CROSSBAR SYSTEMS

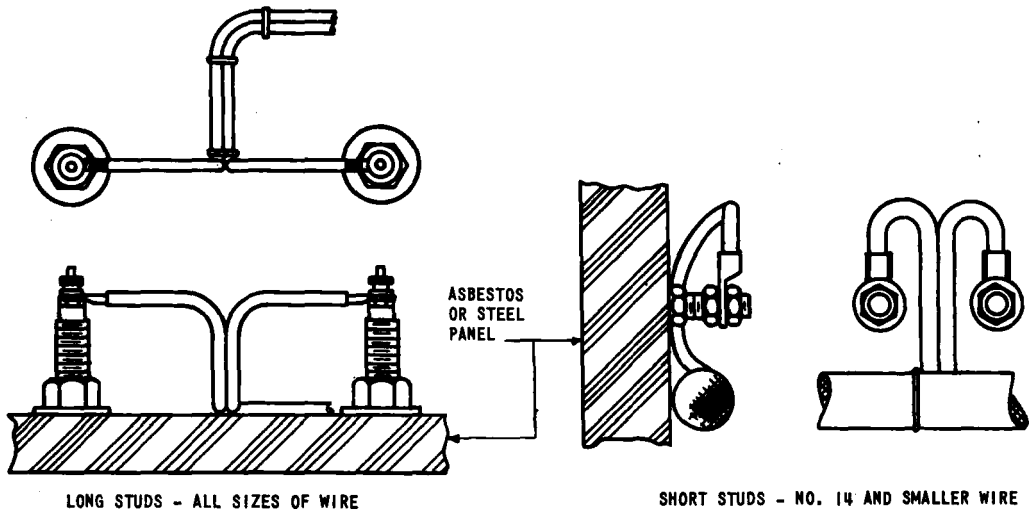

FIG. 9 INSTRUMENTS - EXCEPT EXTERNAL SHUNT AMMETERS

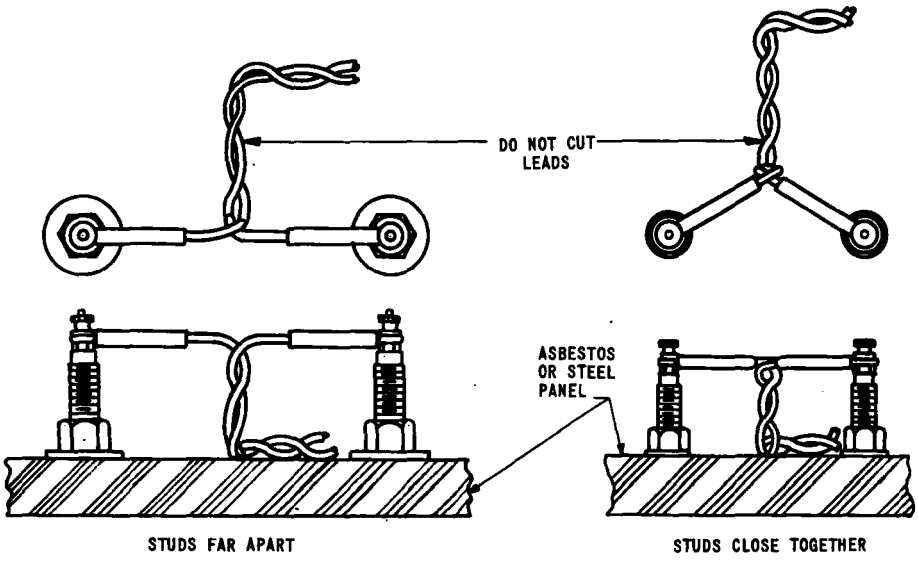

FIG. 10 INSTRUMENTS - AMMETERS WITH EXTERNAL SHUNTS

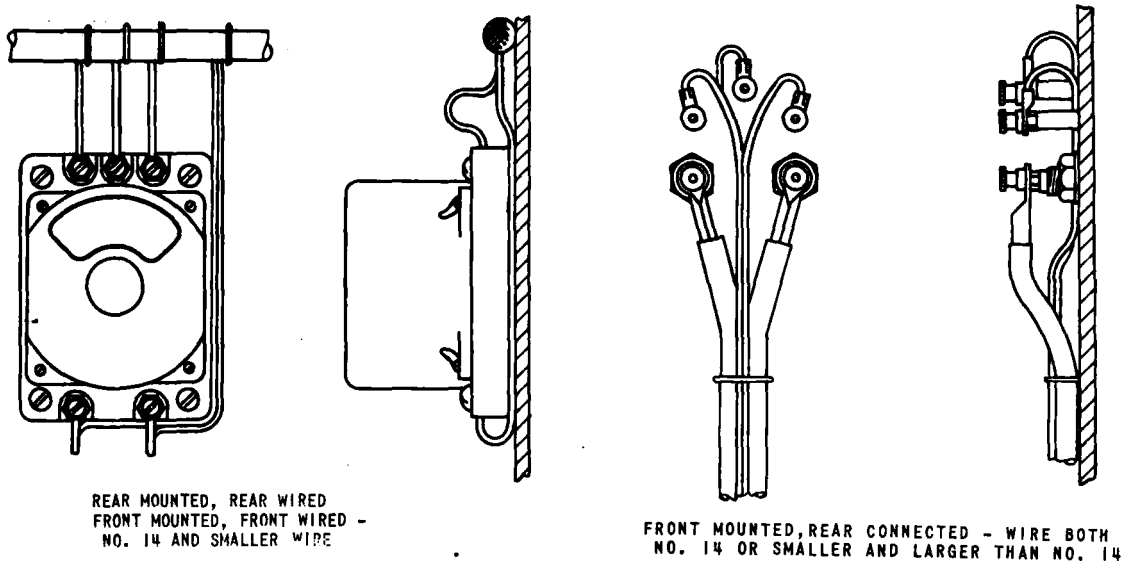

FIG. 11 RELAYS - TIME DELAY AND VOLTAGE

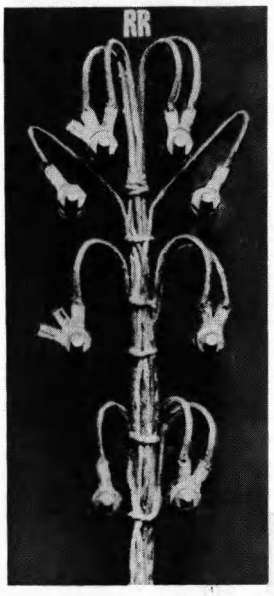

NO. 14 GAUGE AND SMALLER WIRES

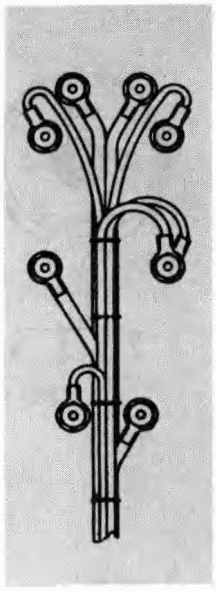

WIRES BOTH NO.14 GAUGE OR SMALLER AND LARGER THAN NO.14 GAUGE

(RP-11754-M)

FIG. 12 RELAYS - KS-5350 AND SIMILAR TYPES - FRONT MOUNTED, REAR CONNECTED

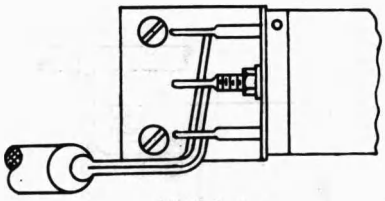

VIEW A-A

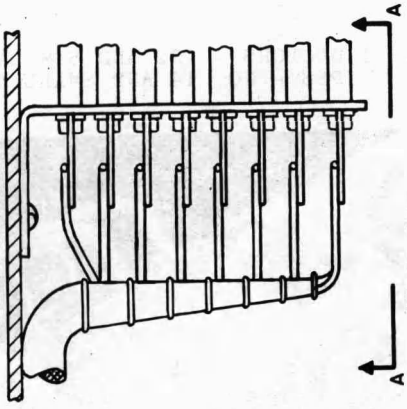

FIG. 15 RESISTORS - 18 AND SIMILAR TYPES ON BRACKETS - NO. 14 AND SMALLER WIRE

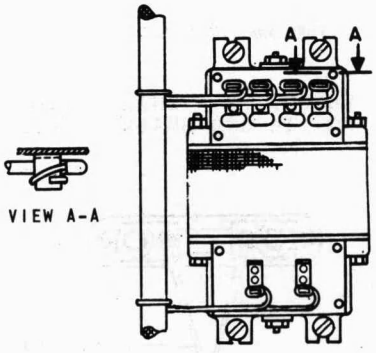

FIG. 13 REPEATING COILS - 113, 114, AND SIMILAR TYPES

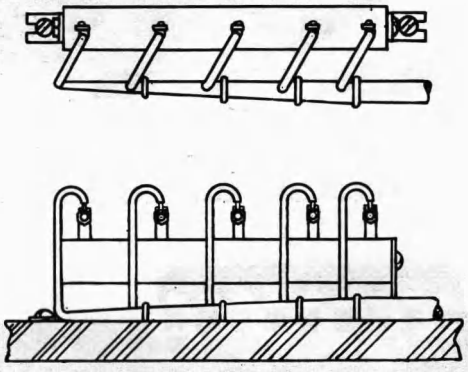

FIG. 16 RESISTORS - TUBE TYPE - BRACKET MOUNTED - CABLE AGAINST PANEL - NO. 14 AND SMALLER WIRE

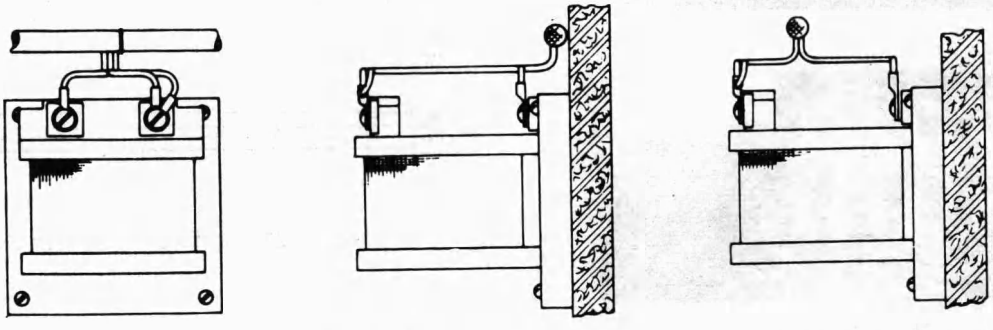

Cable Form Against Panel

Cable Form Away From Panel

(RP-16699)

FIG. 14 REPEATING COILS - 30 AND SIMILAR TYPES - NO. 14 AND SMALLER WIRE

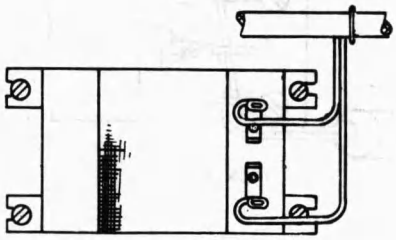

FIG. 17 INDUCTORS - 152 AND SIMILAR TYPES - NO. 14 AND SMALLER WIRE

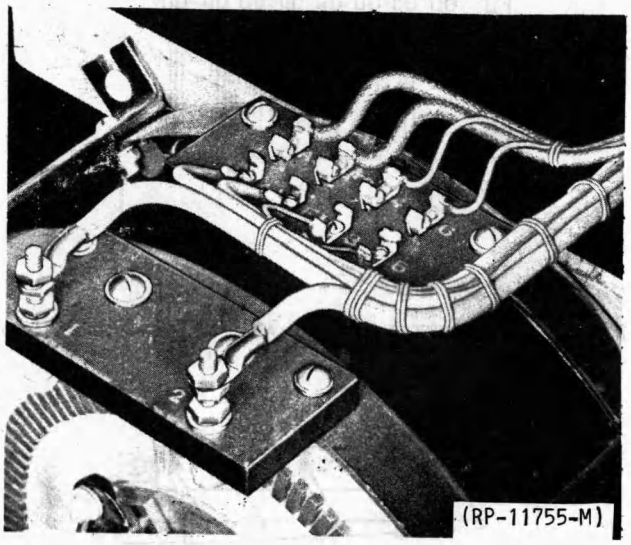

FIG. 18 RHEOSTATS - MOTOR DRIVEN AND LARGE MANUAL - WIRE BOTH NO. 14 OR SMALLER AND LARGER THAN NO. 14

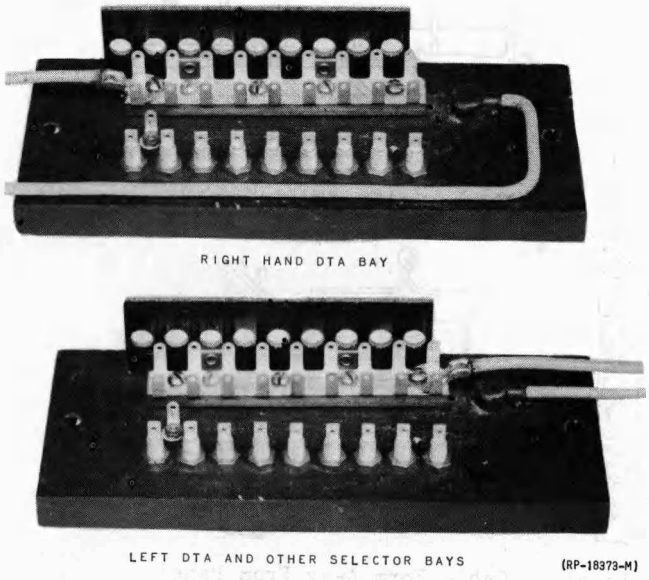

FIG. 19 STEP-BY-STEP SHELF FUSE PANEL

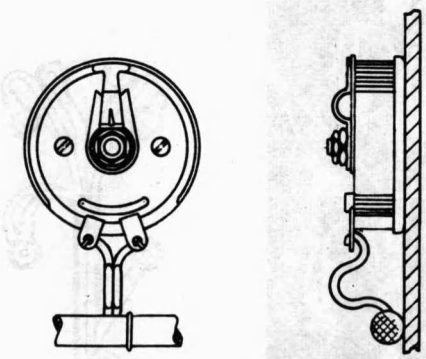

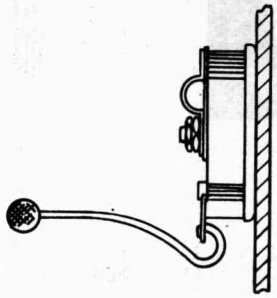

FIG. 20 RHEOSTATS - SMALL RADIO TYPE - NO. 14 AND SMALLER WIRE

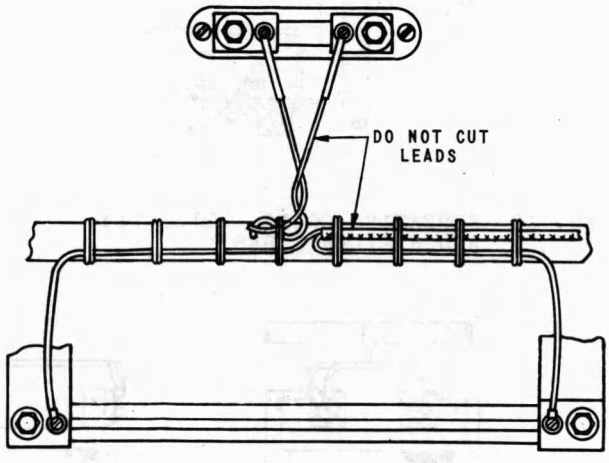

FIG. 21 SHUNTS - AMMETER

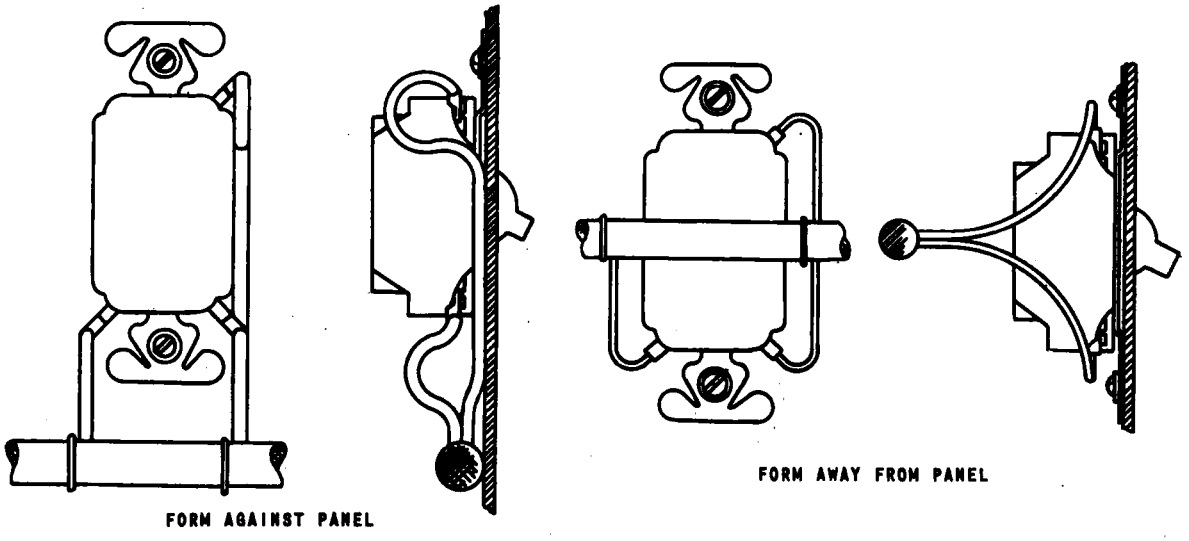

FIG. 22 SWITCHES - TUMBLER, SNAP, TOGGLE, PUSH BUTTON - FRONT OPERATED REAR MOUNTED ON METAL PANELS - NO. 14 AND SMALLER WIRE

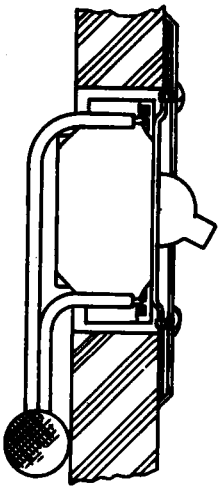

FIG. 23 SWITCHES - TUMBLER, SNAP, TOGGLE, PUSH BUTTON - FRONT OPERATED, REAR MOUNTED ON ASBESTOS PANELS - NO. 14 AND SMALLER WIRE

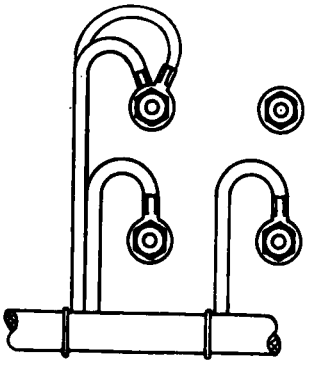

FIG. 24 SWITCHES - TUMBLER, TOGGLE, SNAP - FRONT MOUNTED, REAR CONNECTED - NO. 14 AND SMALLER WIRE

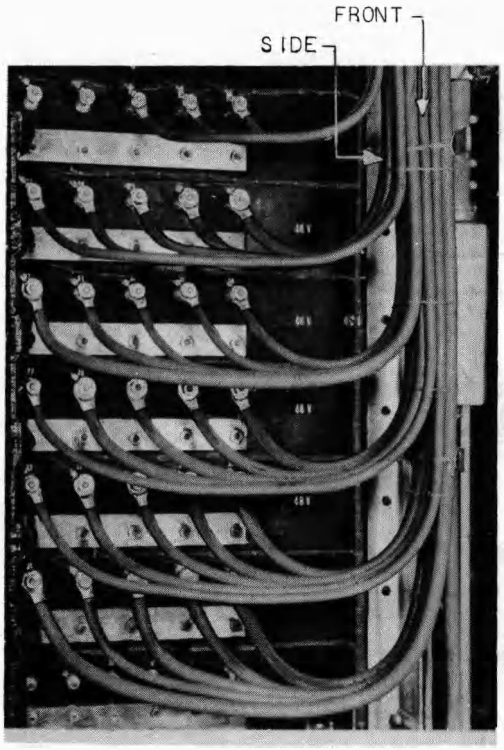

(RP-16721-M)

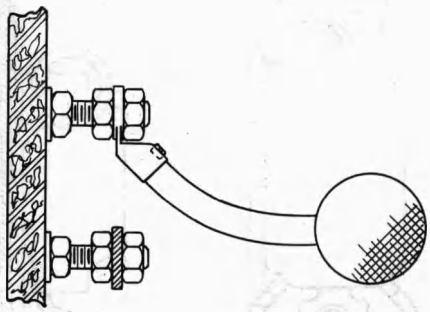

NOTE 1 ALL ALARM LEADS ON THE REAR OF THE BDF PANEL SHOULD BE COMPLETELY WIRED AND CONNECTED AT THE TIME OF THE INITIAL INSTALLATION. MAIN FUSE STUDS FOR UNEQUIPPED CIRCUITS AND ASSOCIATED ALARM FUSE STUDS SHOULD BE PROVIDED WITH DUMMY FUSES.

NOTE 2 CONNECT THE GROUND CABLES, WHICH ARE PAIRED WITH THE BATTERY CABLES TO THE GROUND BAR OF THE BDF BOARD, ARRANGING THEM WITHOUT CROSSES, AND WITHOUT ATTEMPTING TO PLACE INDIVIDUAL CABLES TO ANY PARTICULAR LOCATION ON THE GROUND BAR.

NOTE 3 WHERE LARGE TYPE CHOKE COILS FOR COMMON POWER FILTERS ARE INSTALLED IN THE BATTERY DISTRIBUTION CIRCUIT, BOLT THE SHORT CIRCUITING LINK, WHEN SUPPLIED, IN THE OPEN POSITION AT TURNOVER TO THE TELEPHONE COMPANY. APPLY TWO LAYERS OF RM-591127 FRICTION TAPE. PLACE A COAT OF SHELLAC OVER THE TAPE.

FIG. 25 BATTERY DISTRIBUTING FUSE BOARD - OPEN
SWITCHES - KNIFE OR LEVER)
FUSE POSTS - N.E.C.) 45° LUGS AND WIRE
CONTACTORS - LARGE) LARGER THAN NO. 14
CHOKE COILS - SEE NOTE 3)

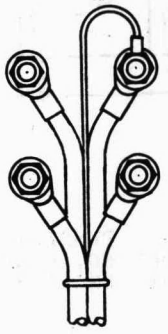

FIG. 26 SWITCHES - KNIFE OR) STRAIGHT LUGS-
LEVER, FUSE POSTS -) WIRE BOTH
N.E.C., CONTACTORS-) NO. 14 OR
LARGE) SMALLER AND
LARGER THAN
NO. 14

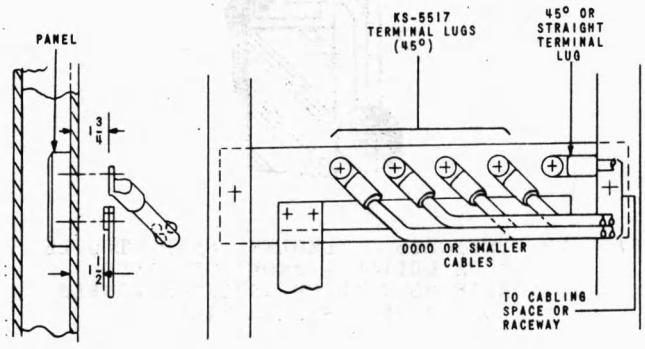

FIG. 27 DRESS OF LEADS AT INDIVIDUAL J86324 BATTERY DISTRIBUTING FUSE PANELS - ENCLOSED

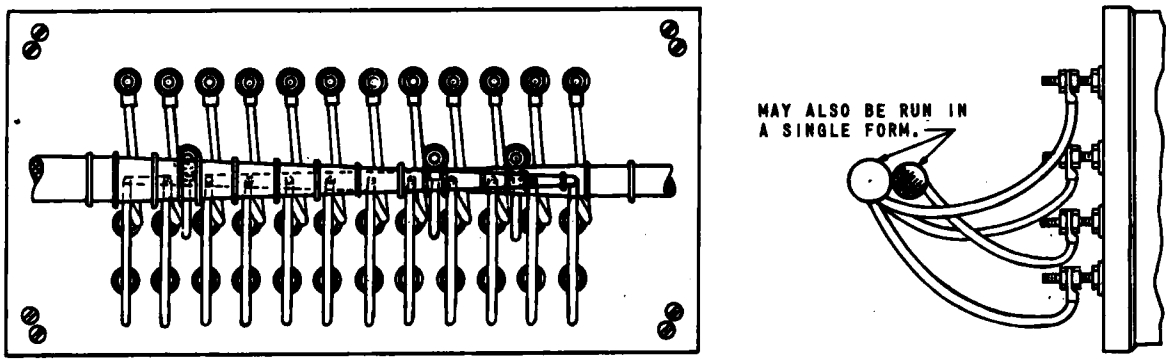

FIG. 28 SWITCHES - MULTIPOLE TRANSFER - NO. 14 AND SMALLER WIRE

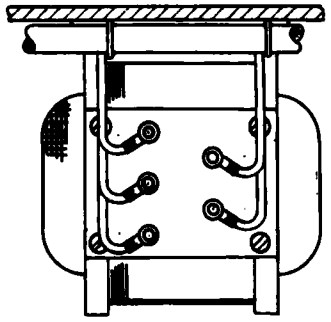

FIG. 29 TRANSFORMERS FOR SMALL RINGING MACHINES SUCH AS KS-5319 - NO. 14 AND SMALLER WIRE

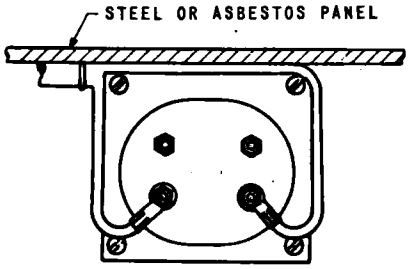

FIG. 30 TRANSFORMERS - SMALL SERVICE - NO. 14 AND SMALLER WIRE

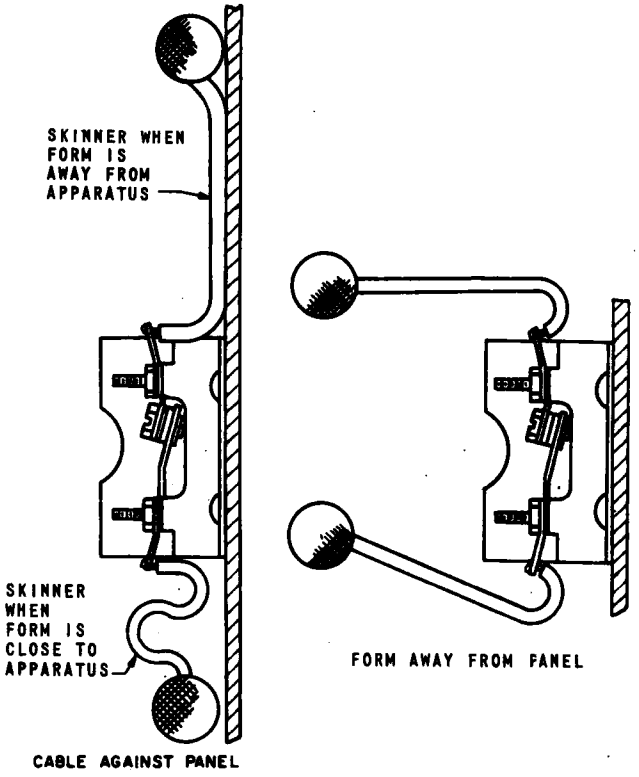

FIG. 31 TERMINAL BLOCKS - STATES CO. - NO. 14 AND SMALLER WIRE

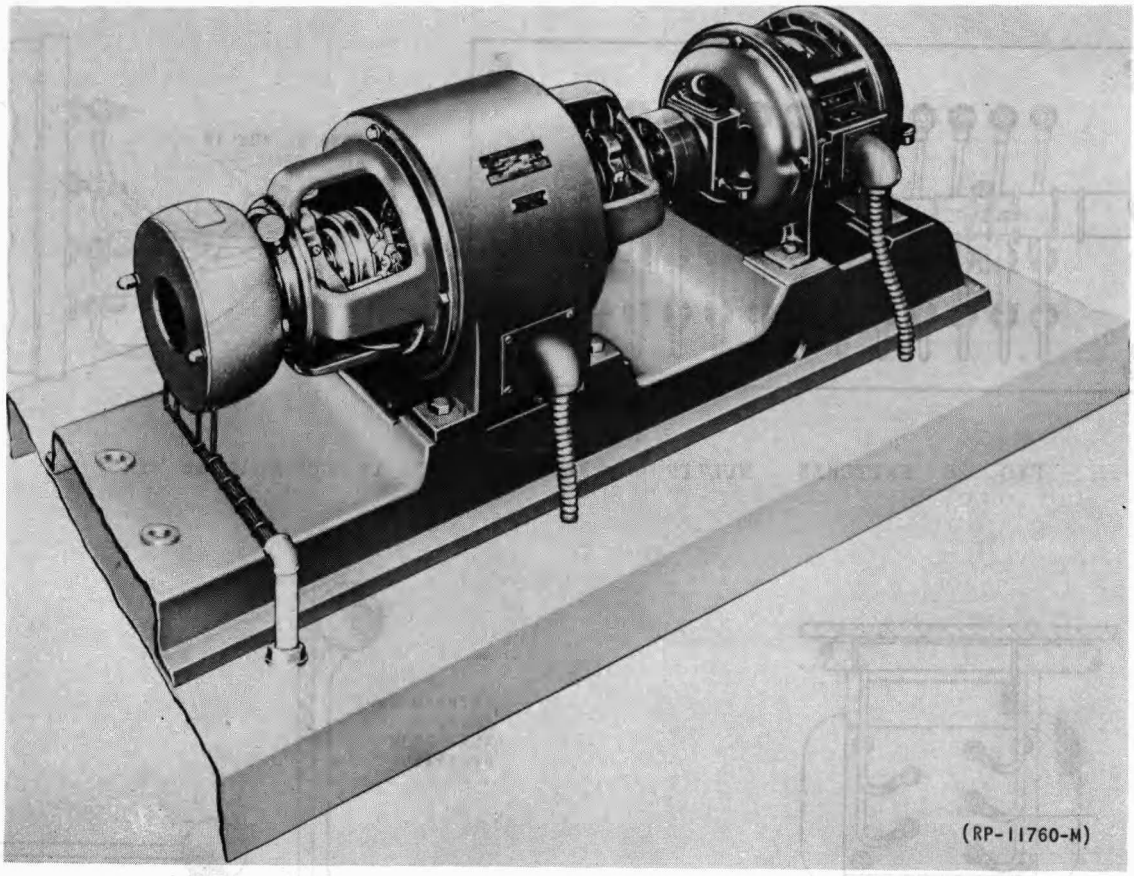

FIG. 32 TONE ALTERNATORS ON LARGE RINGING MACHINE

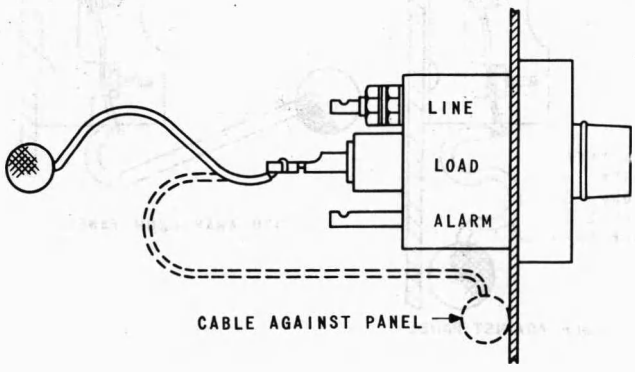

→ FIG. 33 FUSE BLOCKS - KS-14169 AND SIMILAR TYPES - NO. 14 GAUGE AND SMALLER WIRE

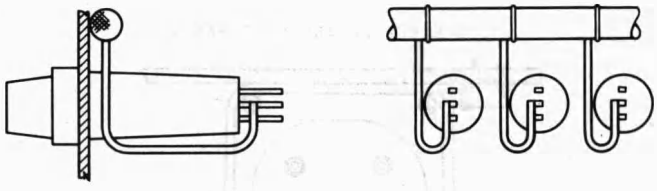

→ FIG. 34 FUSE BLOCKS - 18A AND SIMILAR TYPES - NO. 14 GAUGE AND SMALLER WIRE

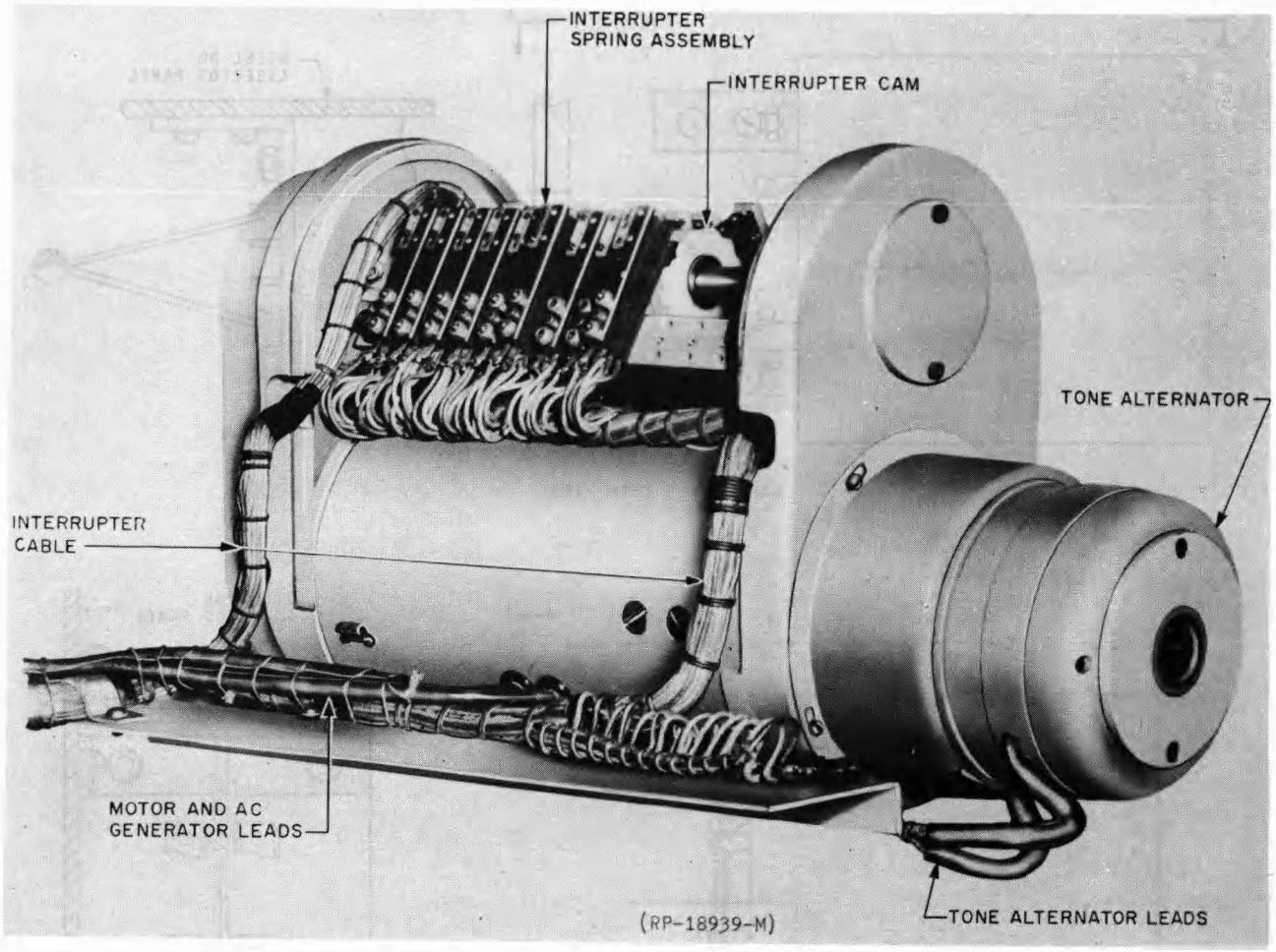

FIG. 35 RINGING MACHINE - KS-15532 - 1 AMPERE TYPE

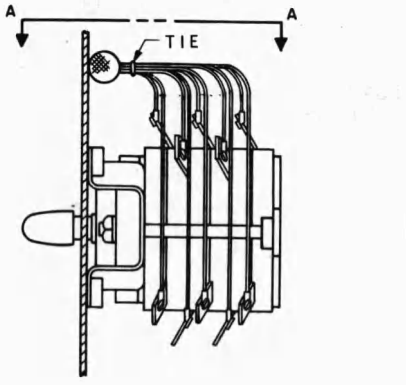

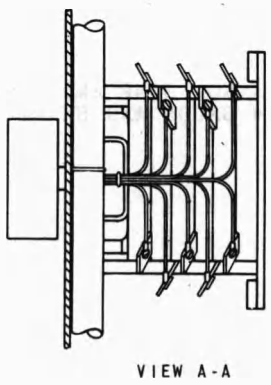

FIG. 36 SWITCHES - KS-5716 ROTARY SNAP TYPE - NO. 14 GAUGE AND SMALLER WIRES

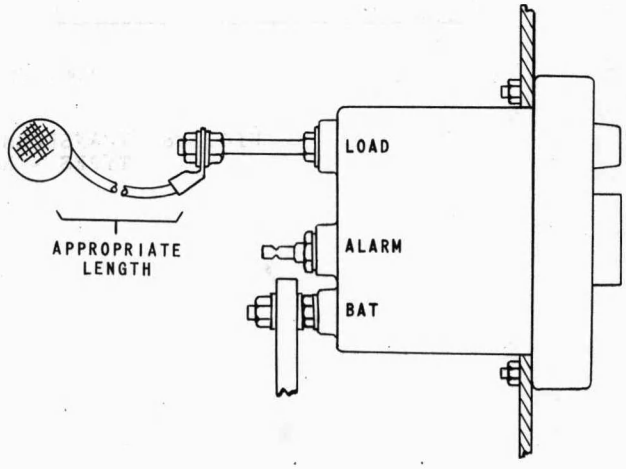

FIG. 37 FUSE BLOCKS - KS-14473, KS-16364 AND SIMILAR TYPES

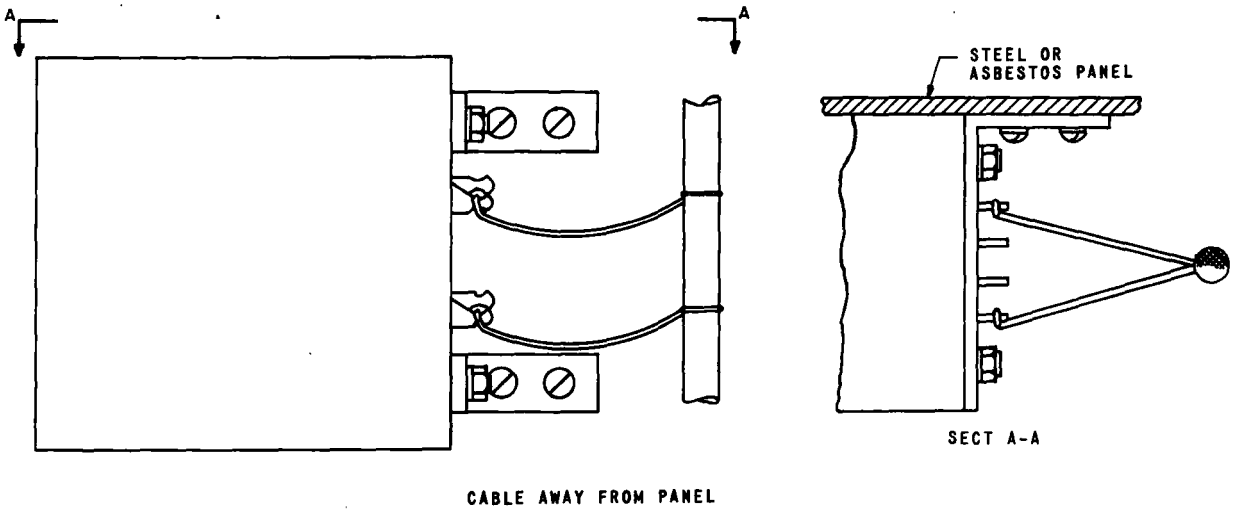

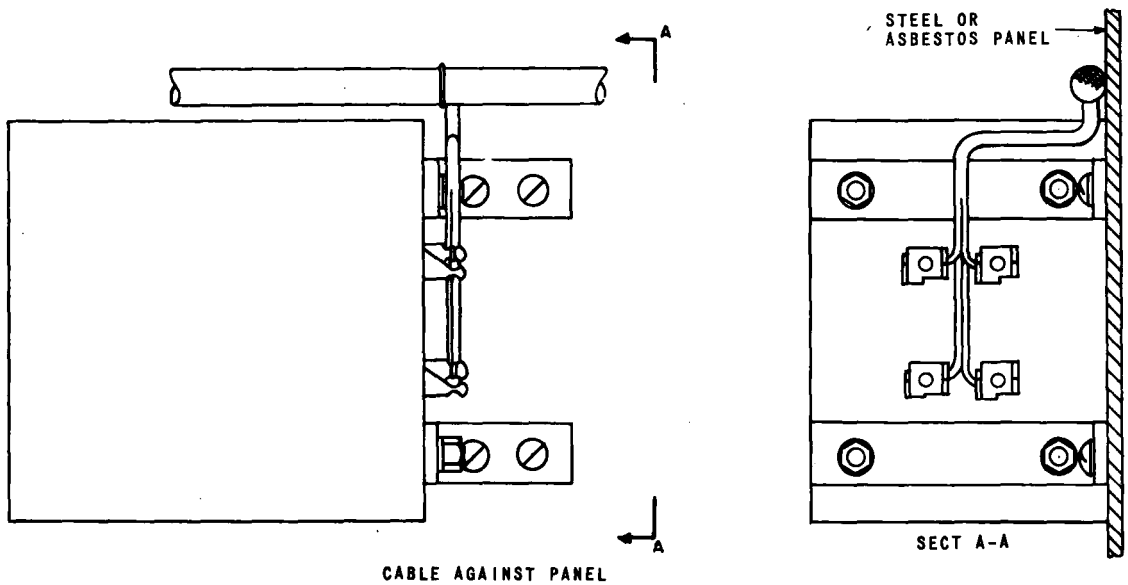

FIG. 38 TRANSFORMERS - NO. 344F AND SIMILAR TYPES - NO. 14 GAUGE AND SMALLER WIRES

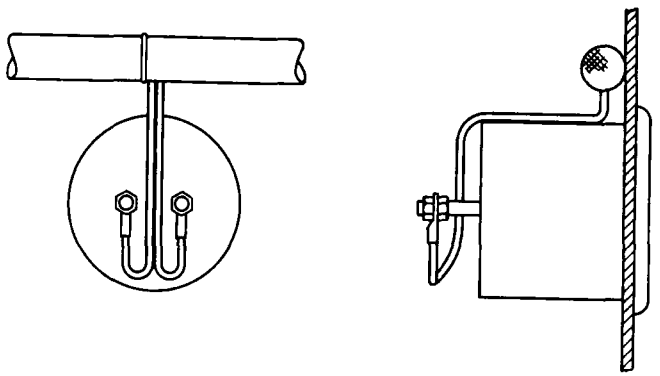

FIG. 39 INSTRUMENTS - AMMETERS - WESTON 301 AND SIMILAR TYPES - NO. 14 GAUGE AND SMALLER WIRES

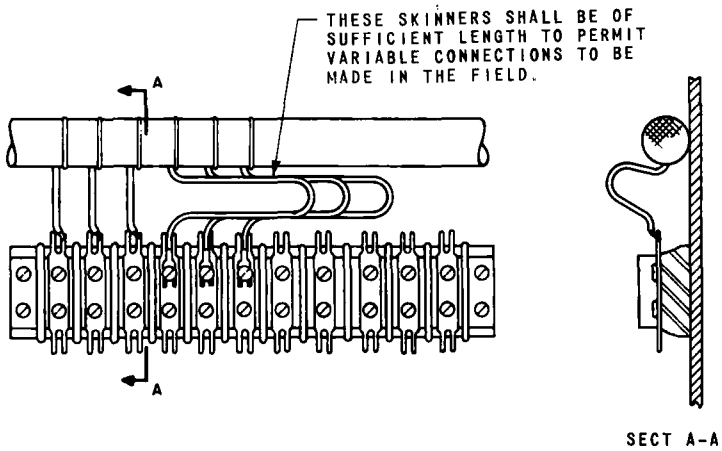

FIG. 40 TERMINAL STRIPS - H.B. JONES CO. TYPE AND SIMILAR - NO. 14 GAUGE AND SMALLER WIRES