April 26, 1960 R. B. TROUSDALE 2,934,606

SELECTOR CIRCUIT

Original Filed Sept. 21, 1950 49 Sheets-Sheet 1

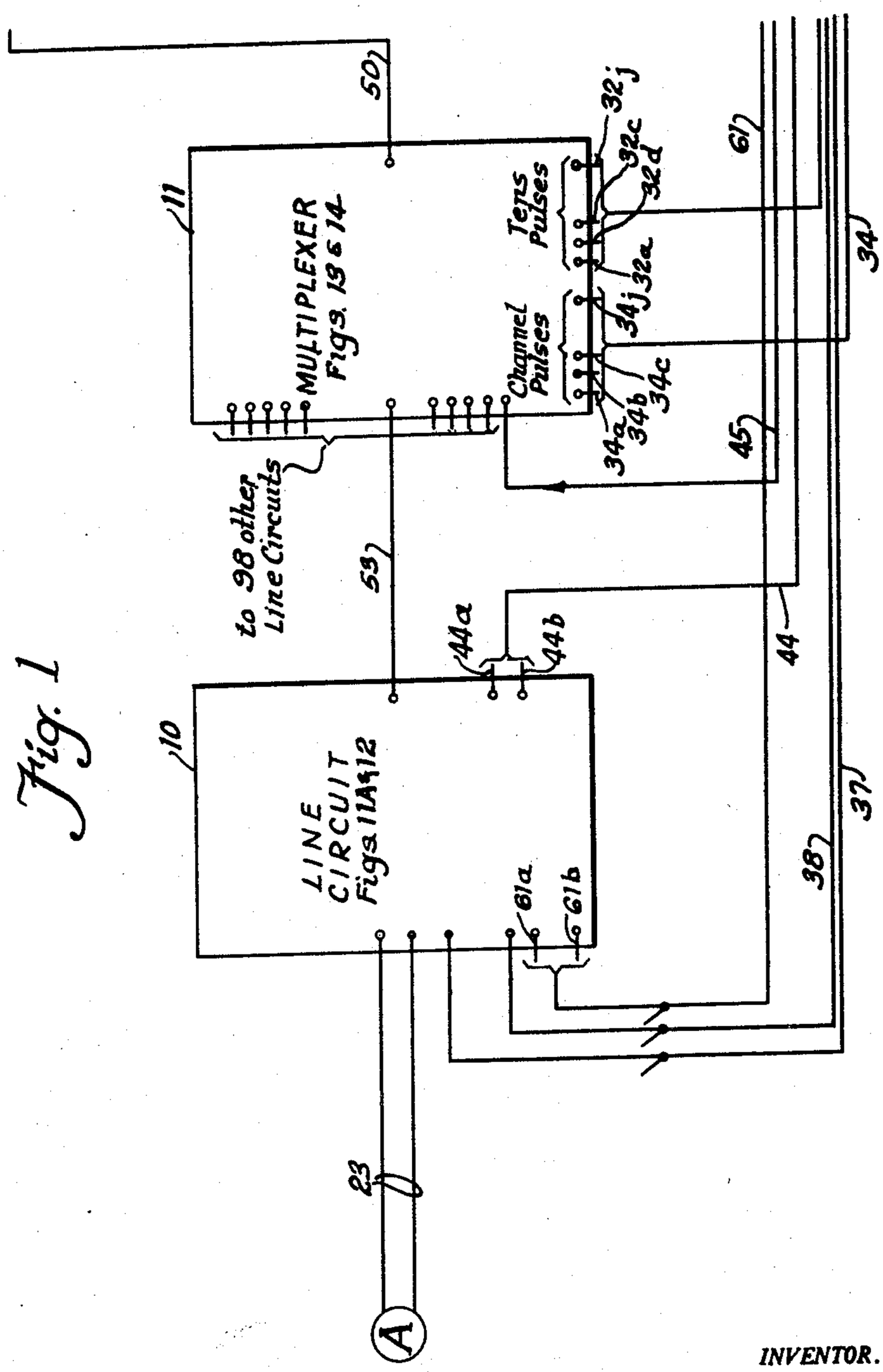

INVENTOR.
ROBERT B. TROUSDALE
BY
J. L. Bonner
Att'y

SELECTOR CIRCUIT

Original Filed Sept. 21, 1950 49 Sheets-Sheet 2

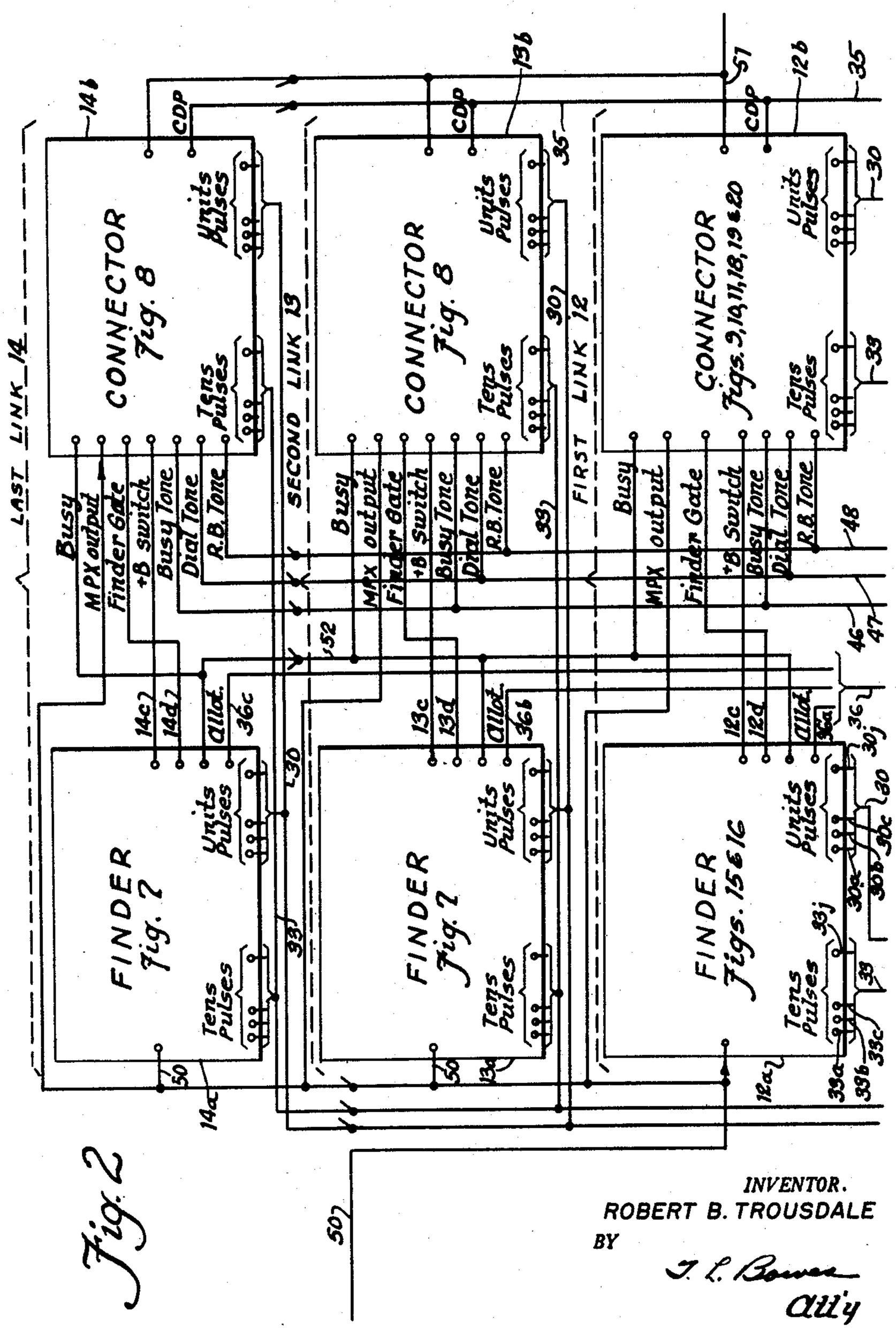

Fig. 2

INVENTOR.
ROBERT B. TROUSDALE
BY
J. L. Bower
Att'y

SELECTOR CIRCUIT

Original Filed Sept. 21, 1950 49 Sheets-Sheet 3

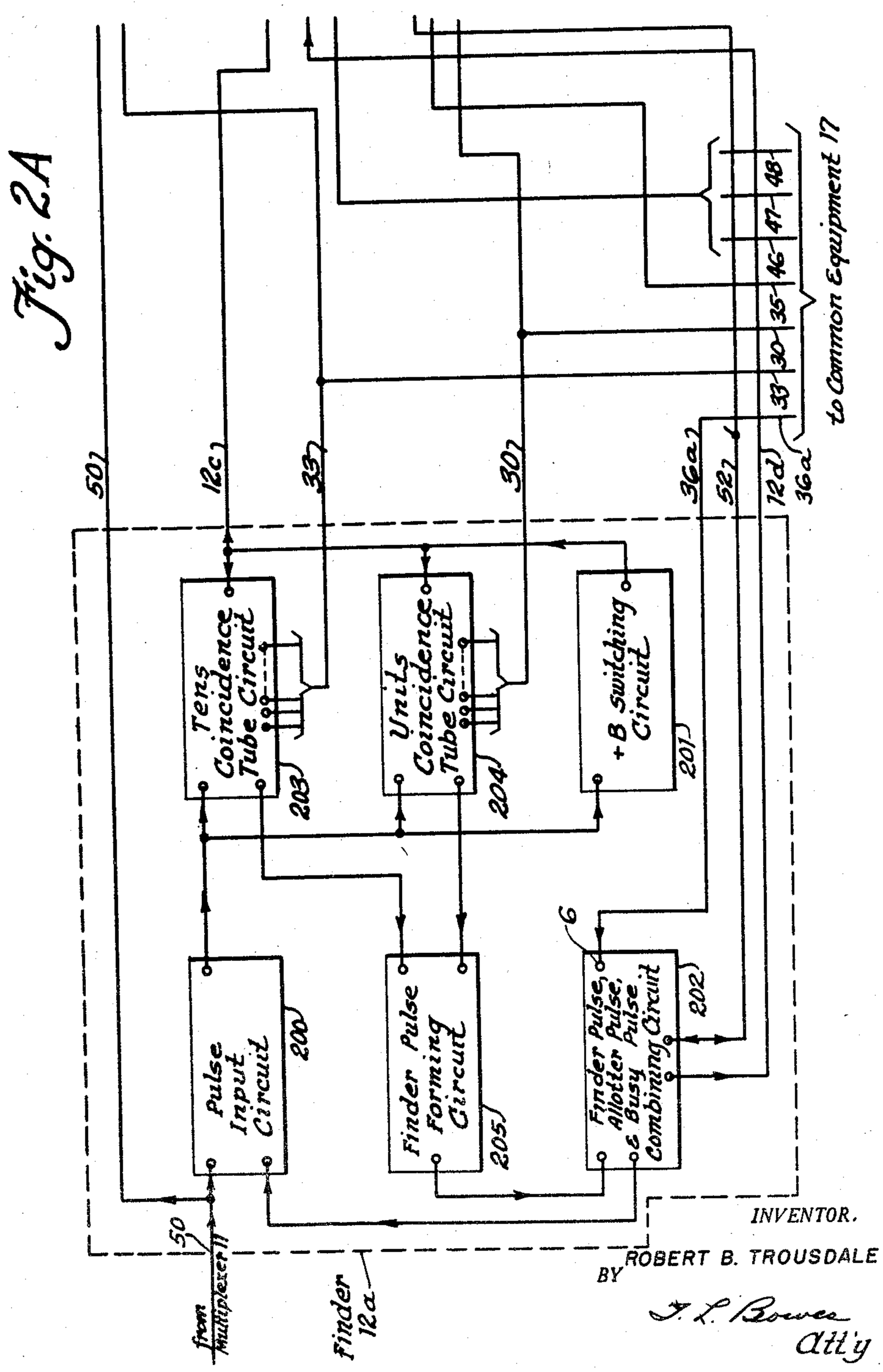

INVENTOR.
ROBERT B. TROUSDALE
BY
T. L. Bowen
Att'y

SELECTOR CIRCUIT

Original Filed Sept. 21, 1950 49 Sheets-Sheet 4

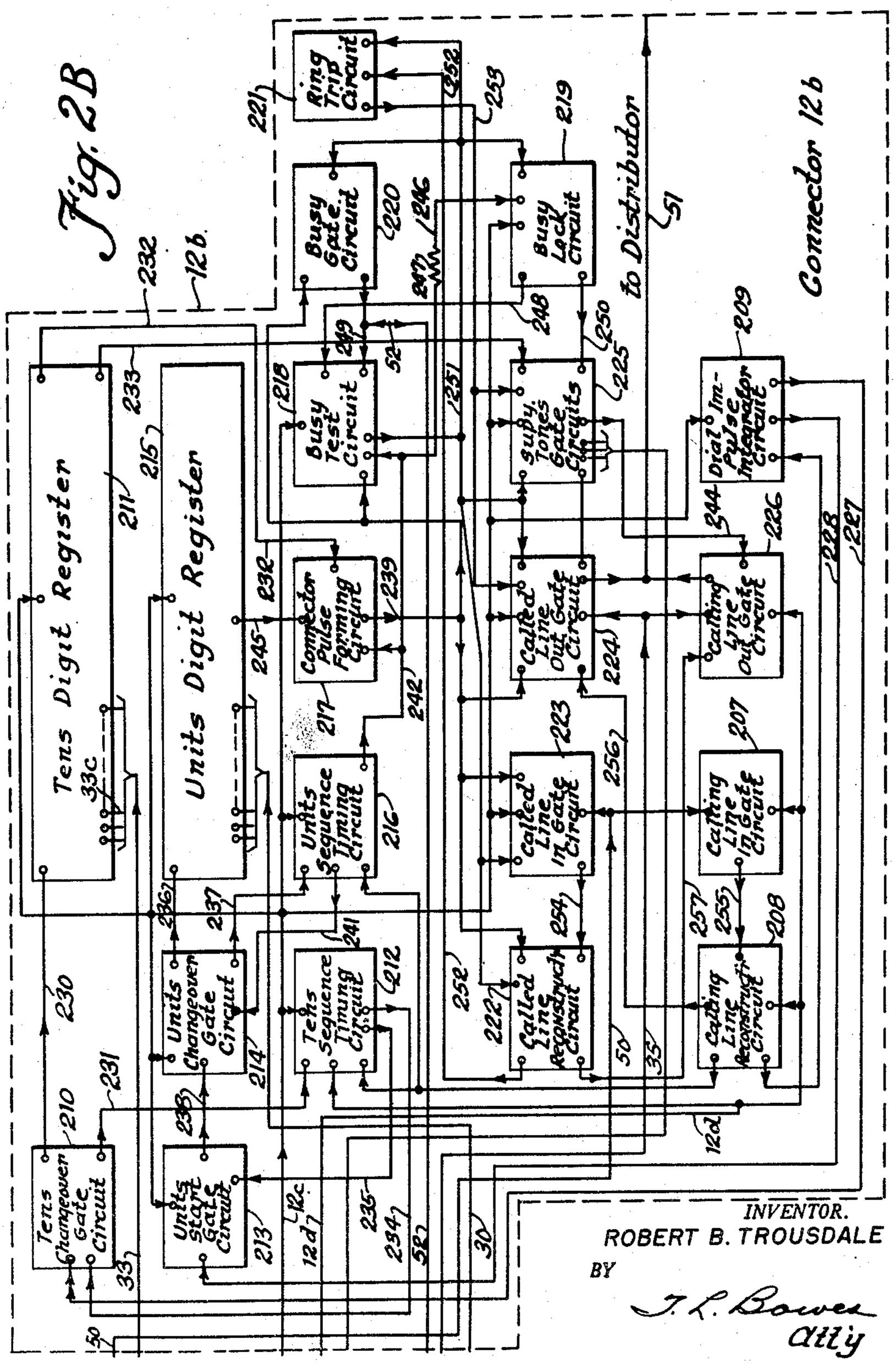

INVENTOR.
ROBERT B. TROUSDALE
BY
J. L. Bowen
Atty

SELECTOR CIRCUIT

Original Filed Sept. 21, 1950 49 Sheets-Sheet 5

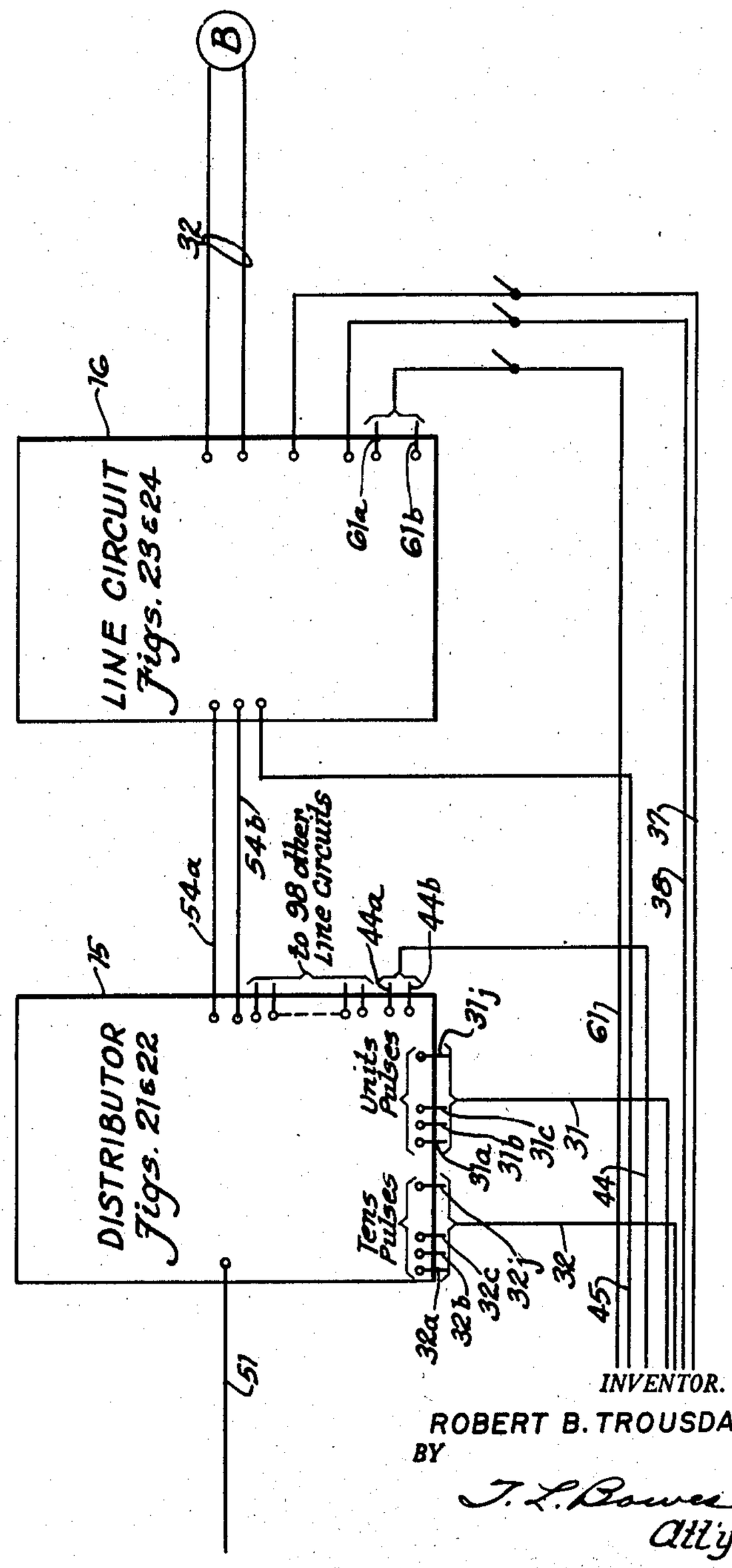

Fig. 3

INVENTOR.
ROBERT B. TROUSDALE
BY
T. L. Bowen
Atty

April 26, 1960 R. B. TROUSDALE 2,934,606

SELECTOR CIRCUIT

Original Filed Sept. 21, 1950 49 Sheets-Sheet 6

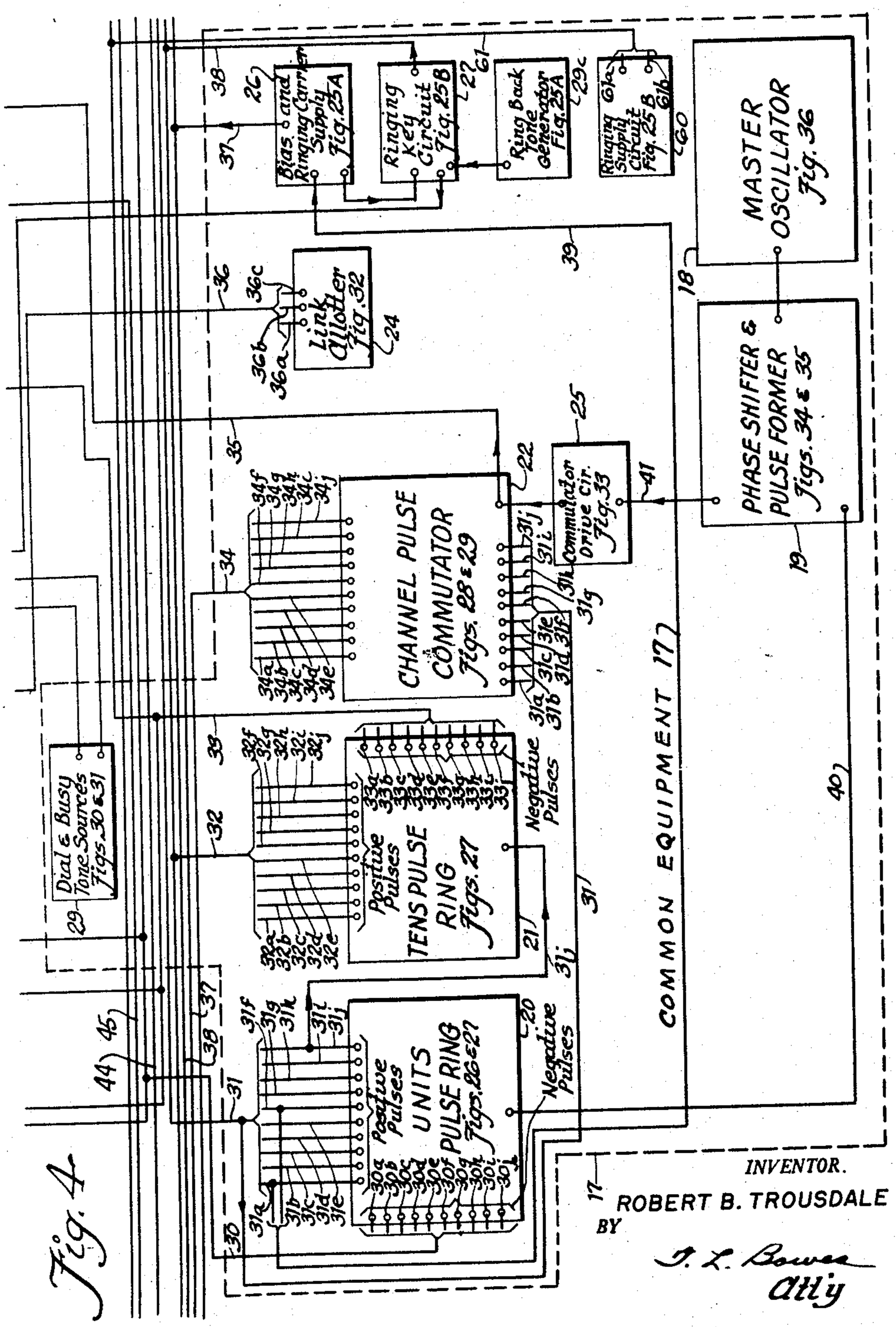

Fig. 4

INVENTOR.
ROBERT B. TROUSDALE
BY
T. L. Bowen
Atty

SELECTOR CIRCUIT

Original Filed Sept. 21, 1950 49 Sheets-Sheet 7

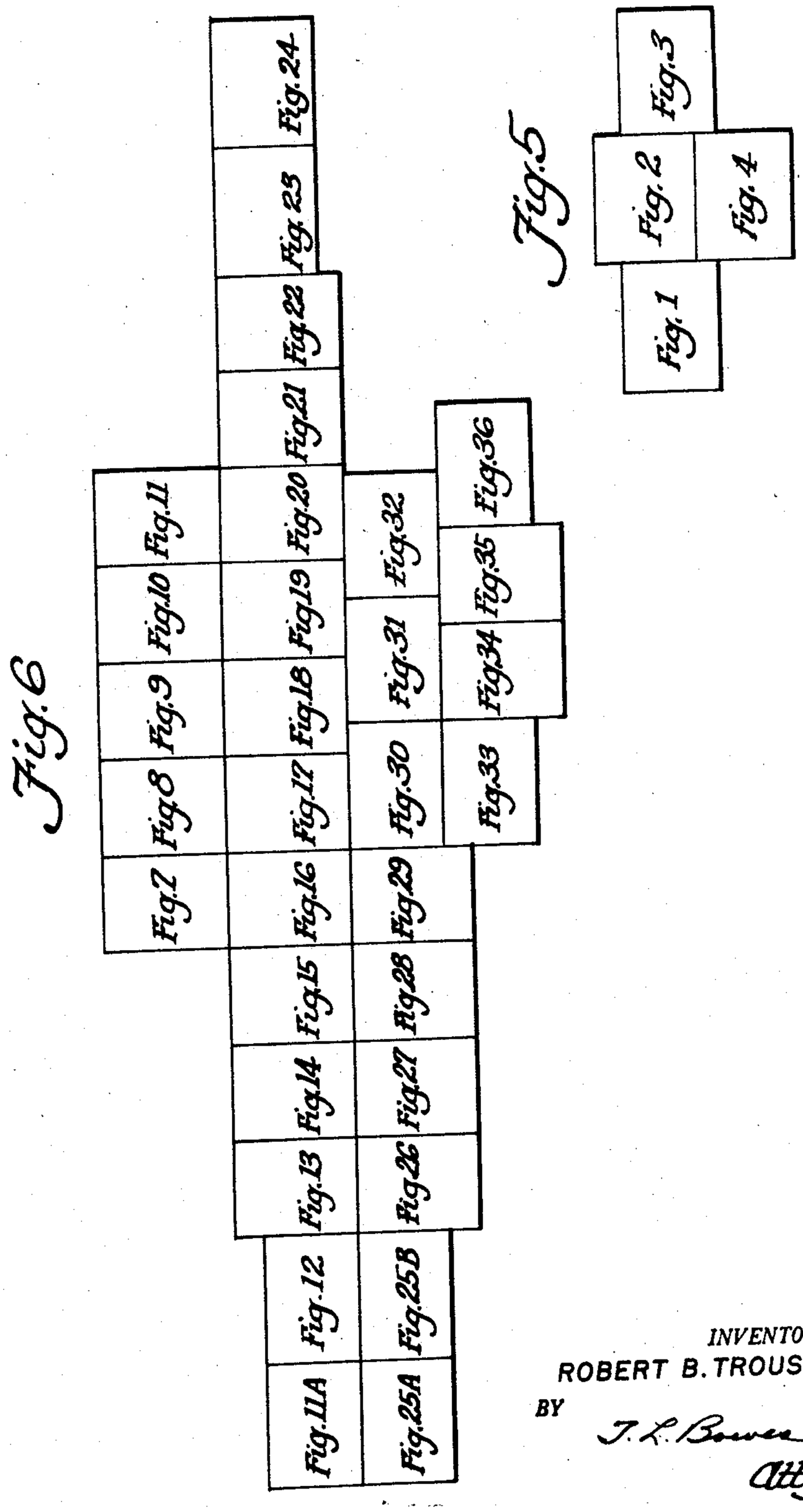

INVENTOR.
ROBERT B. TROUSDALE
BY J. L. Bowen
Att'y

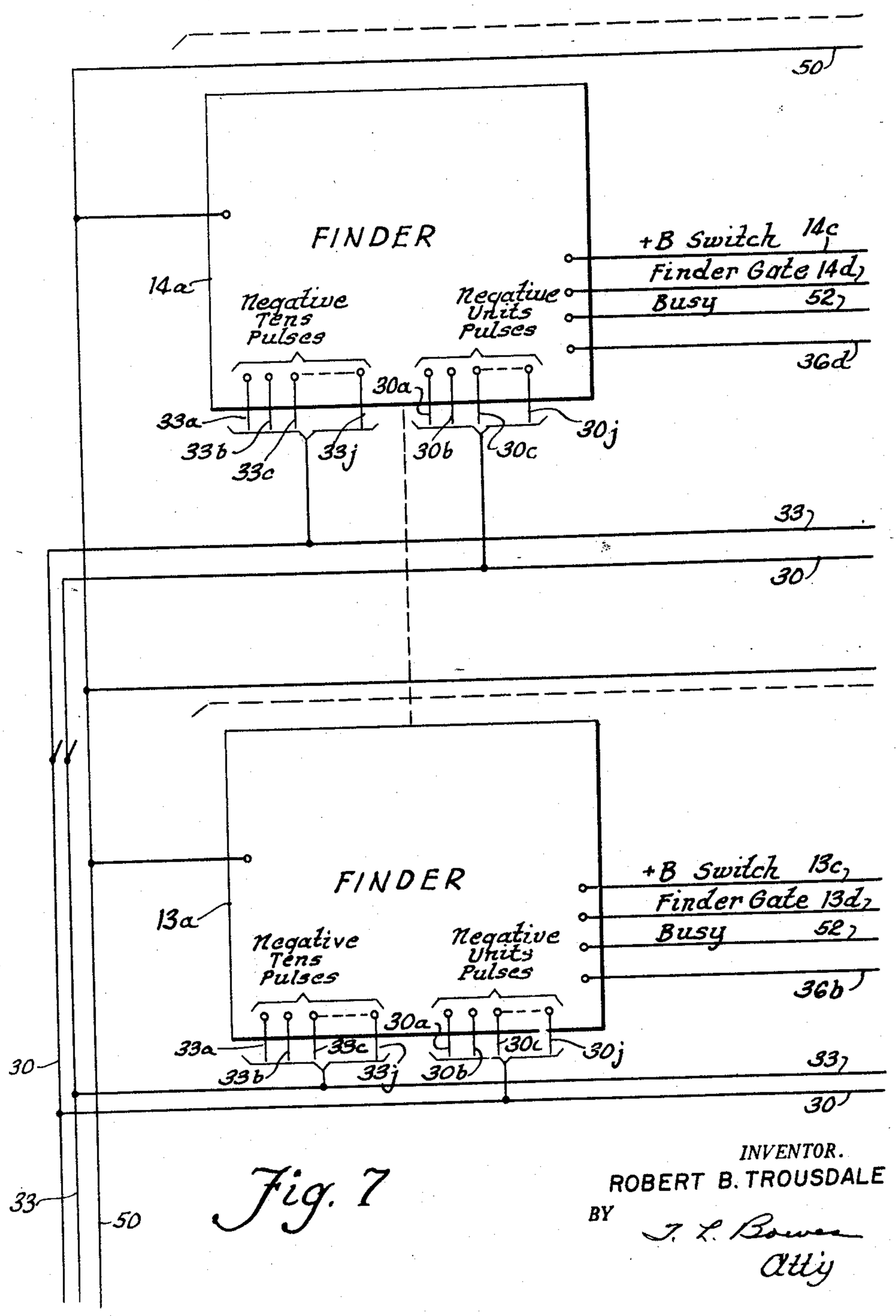

Fig. 7

INVENTOR.
ROBERT B. TROUSDALE
BY T. L. Bowen
Atty

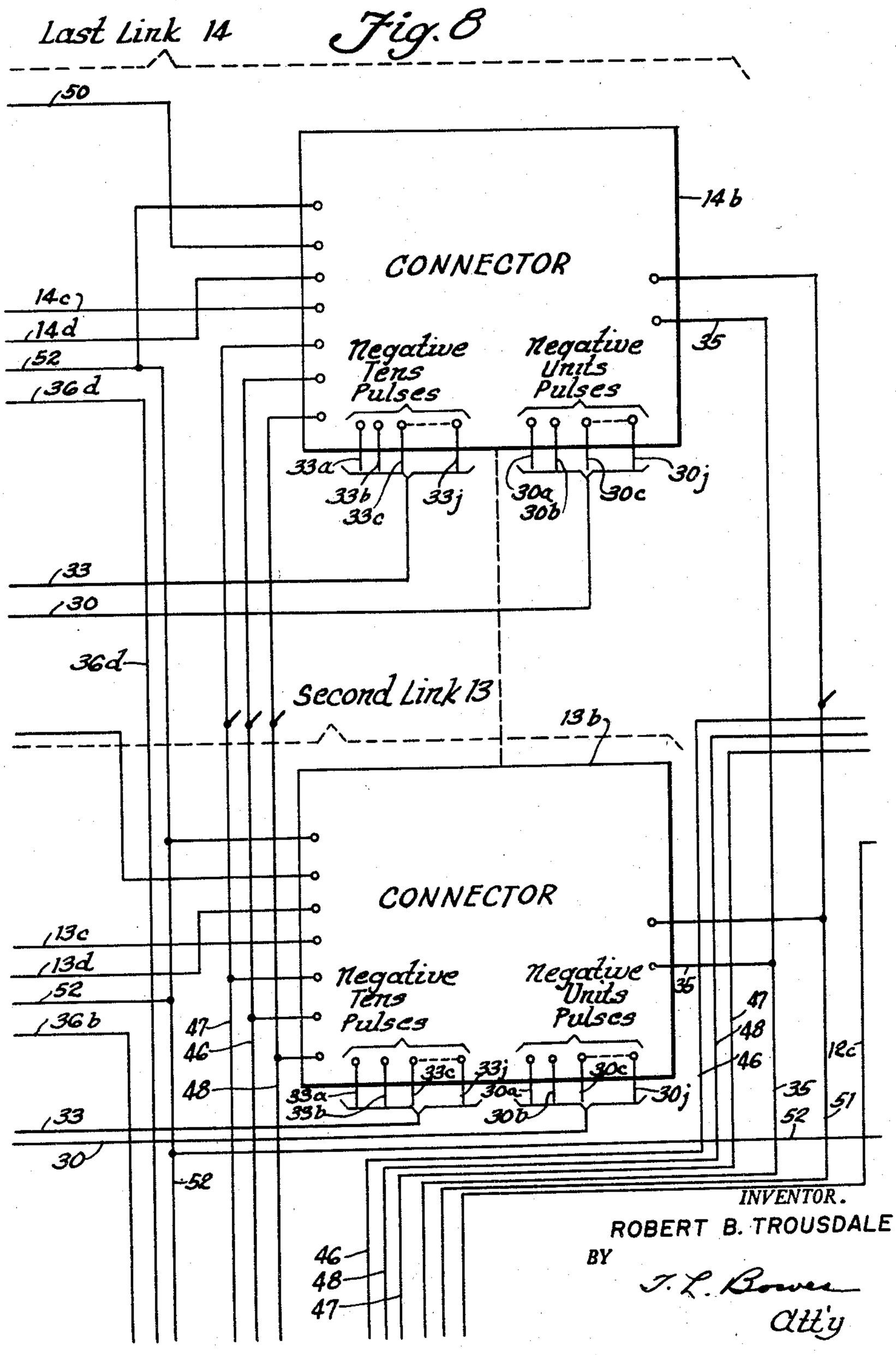

INVENTOR.
ROBERT B. TROUSDALE
BY
T. L. Bowen
Att'y

SELECTOR CIRCUIT

Original Filed Sept. 21, 1950 49 Sheets-Sheet 10

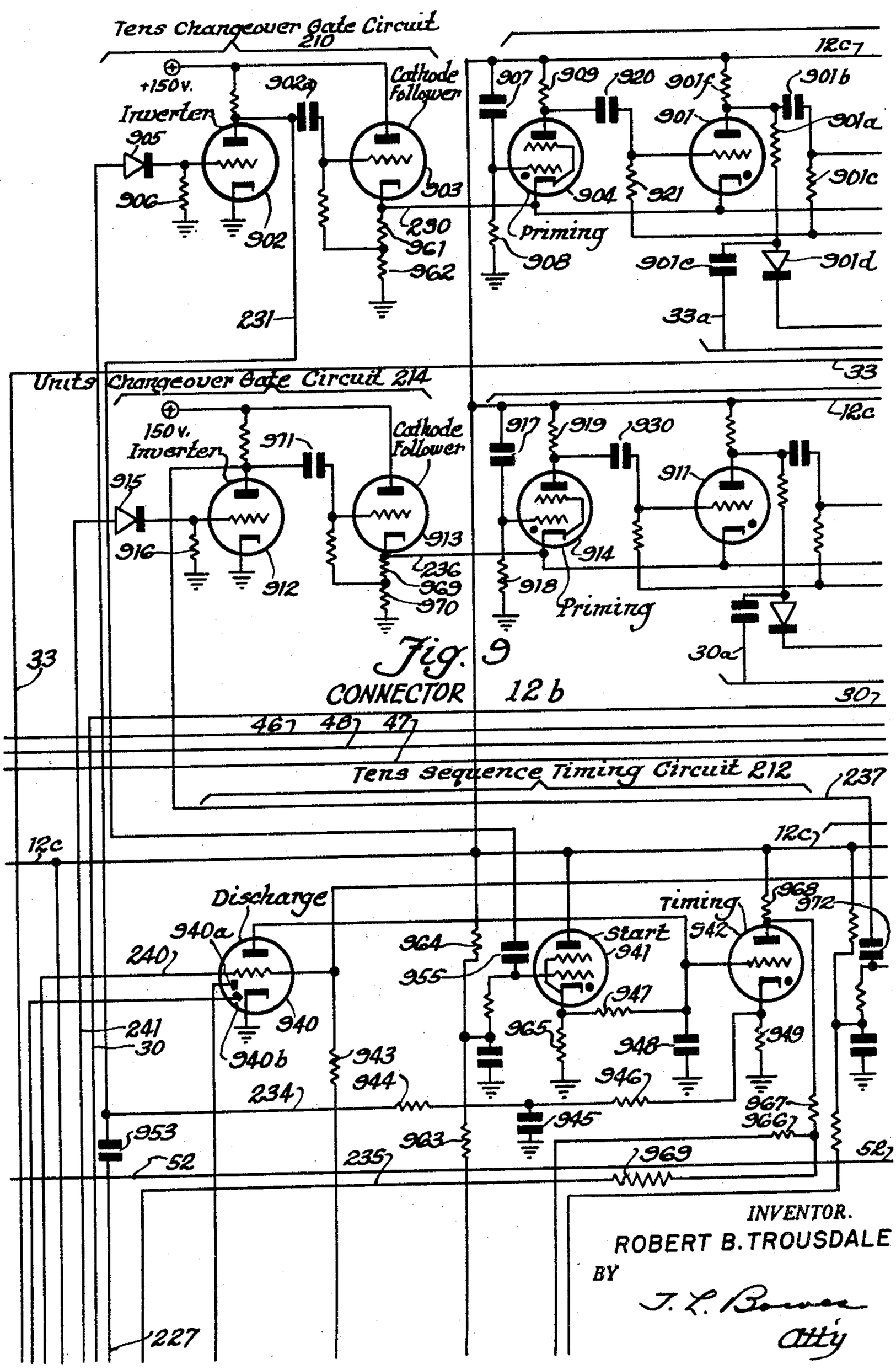

Fig. 9

INVENTOR.
ROBERT B. TROUSDALE
BY
J. L. Bowen
Atty

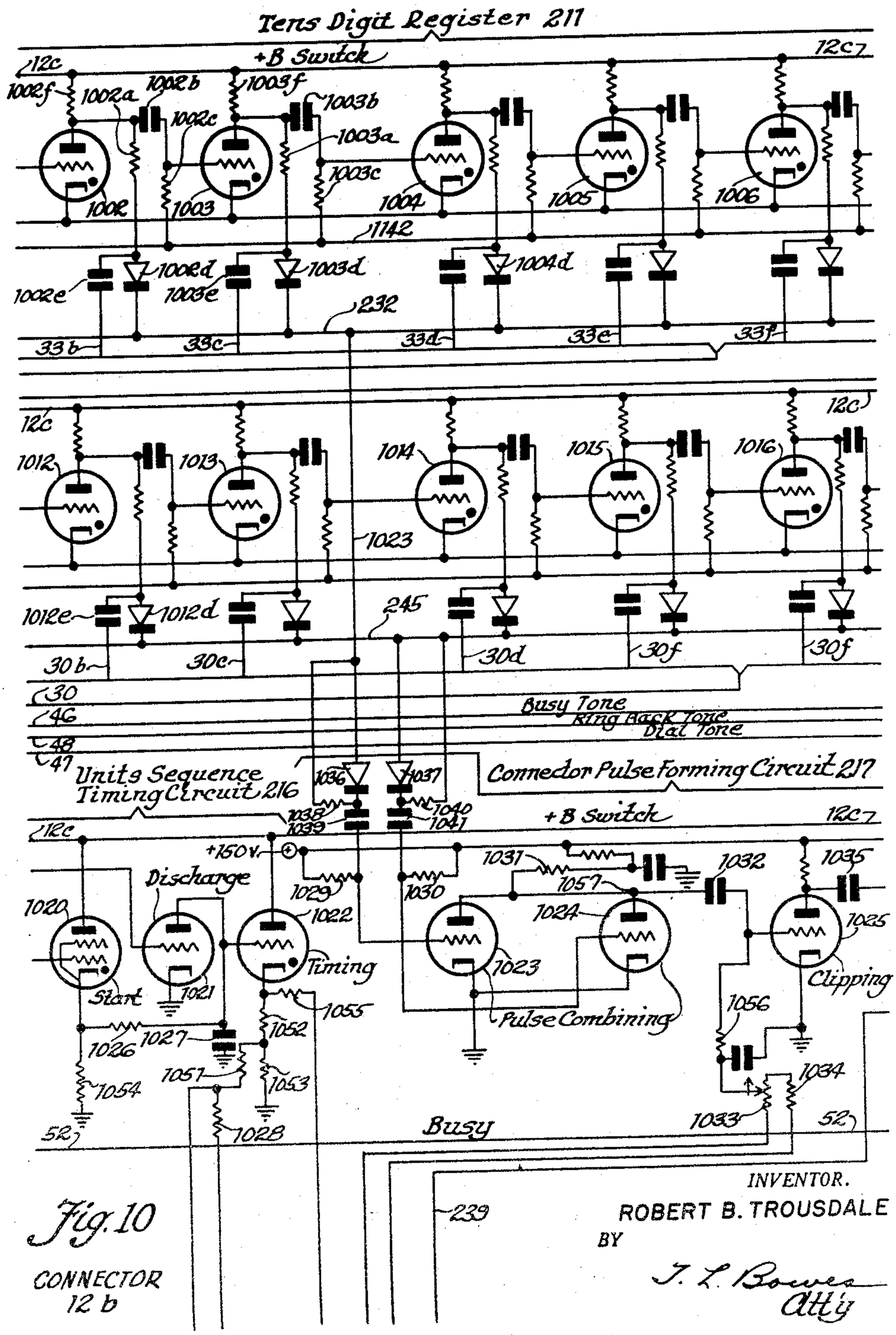

INVENTOR.
ROBERT B. TROUSDALE
BY
J. L. Bowes
Att'y

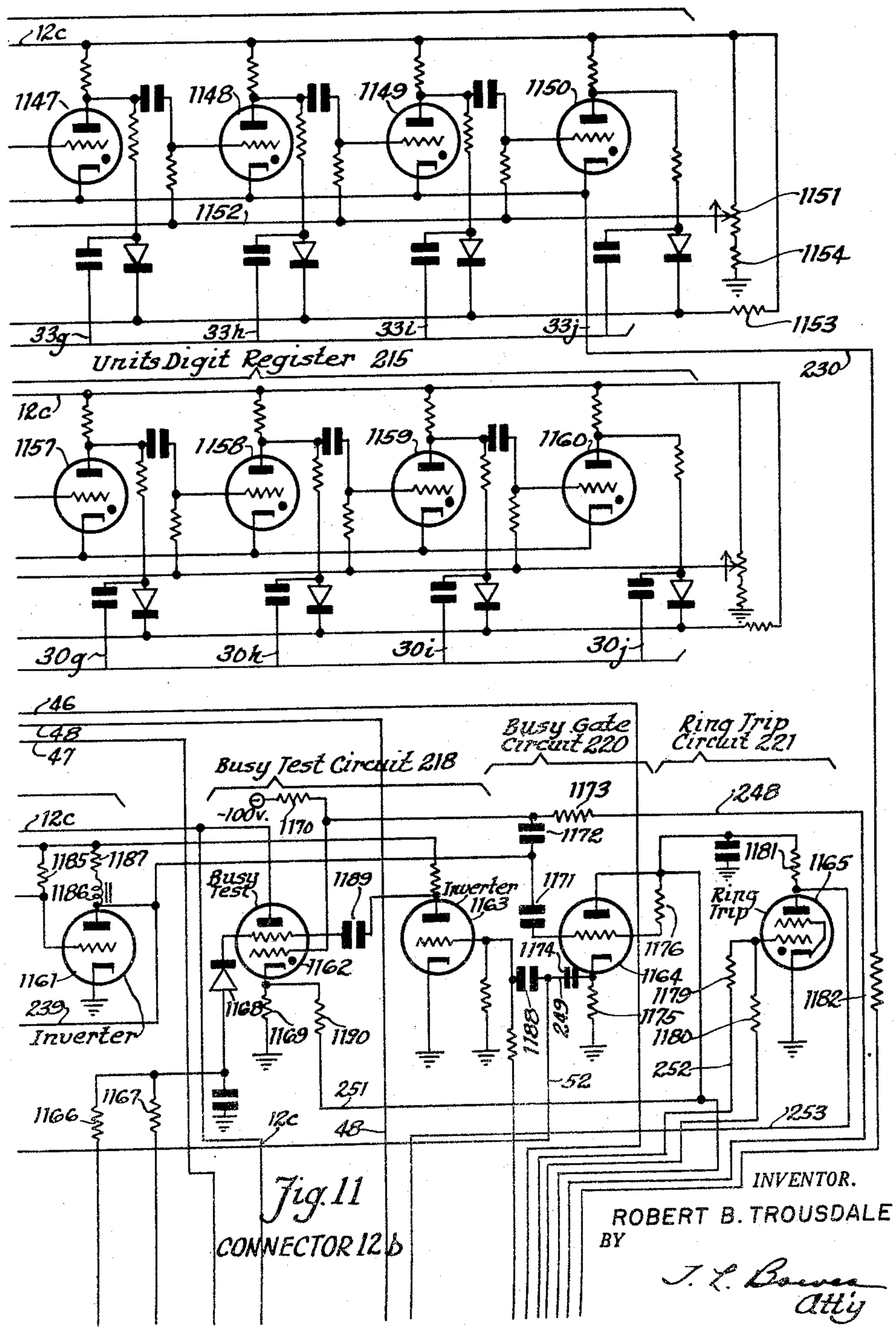

Fig. 11

INVENTOR.
ROBERT B. TROUSDALE
BY
J. L. Bowen
Atty

SELECTOR CIRCUIT

Original Filed Sept. 21, 1950 49 Sheets-Sheet 13

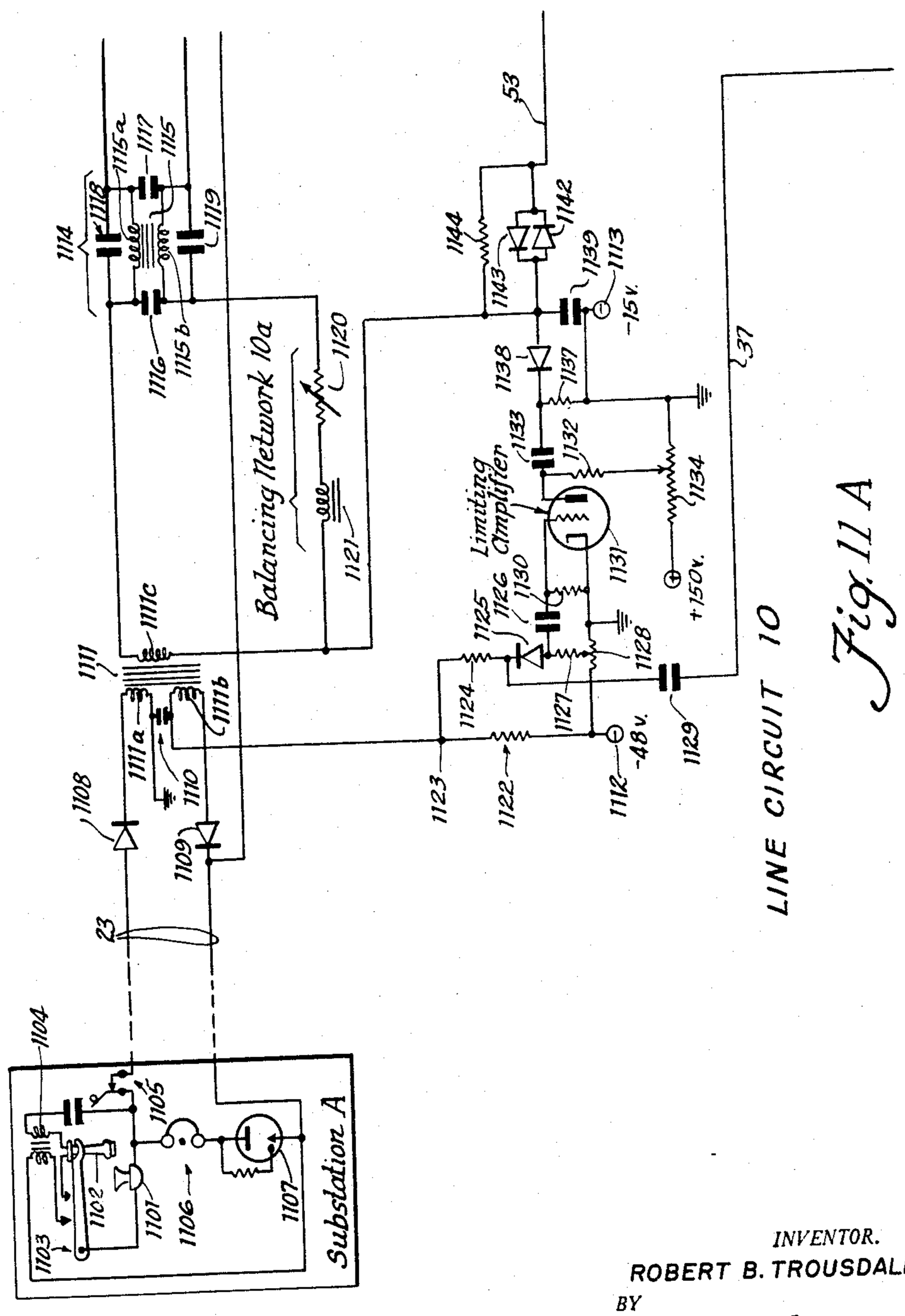

Fig. 11 A

INVENTOR.
ROBERT B. TROUSDALE
BY
J. L. Bowen
Atty

April 26, 1960 R. B. TROUSDALE 2,934,606

SELECTOR CIRCUIT

Original Filed Sept. 21, 1950 49 Sheets-Sheet 14

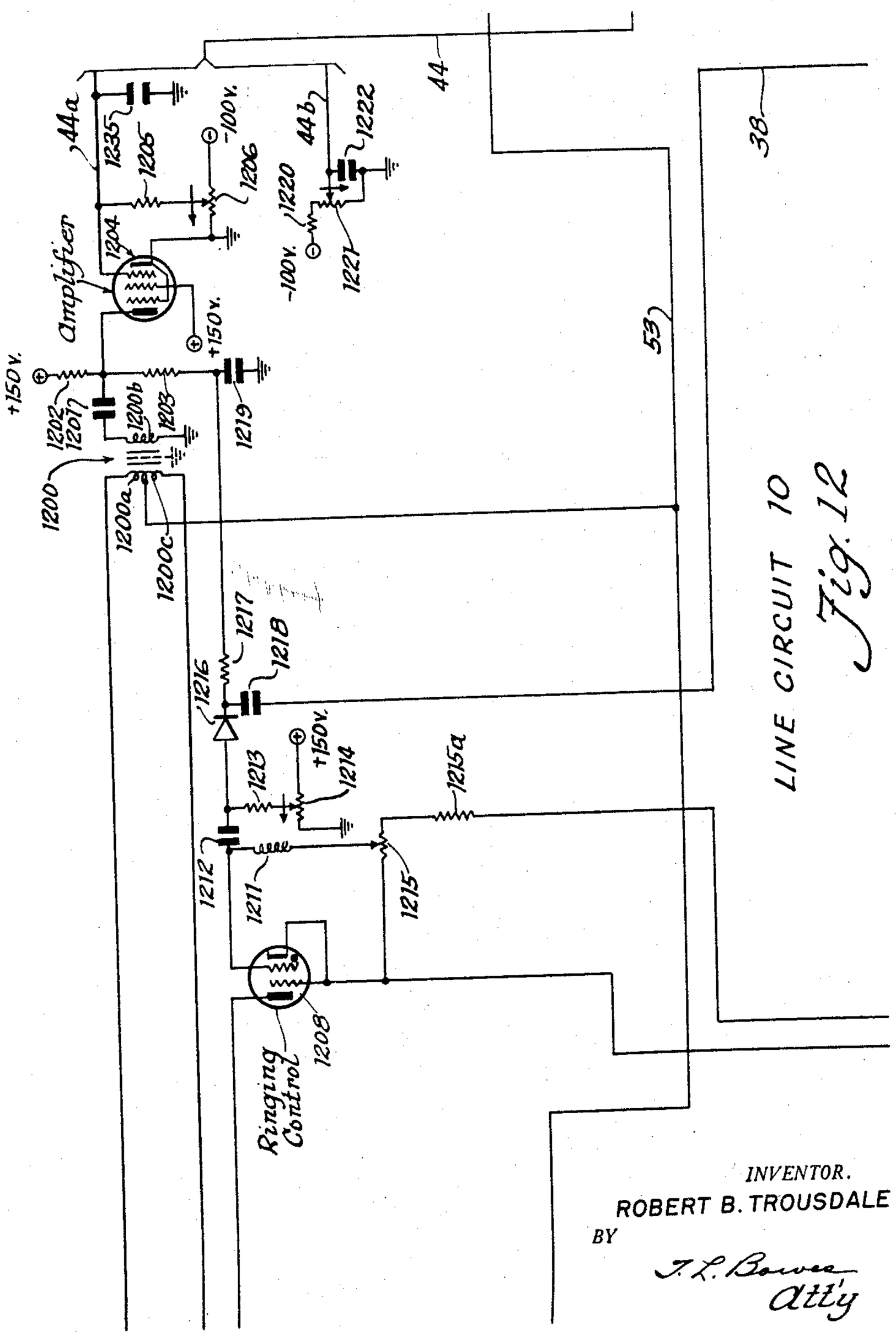

INVENTOR.
ROBERT B. TROUSDALE
BY
T. L. Bowen
Atty

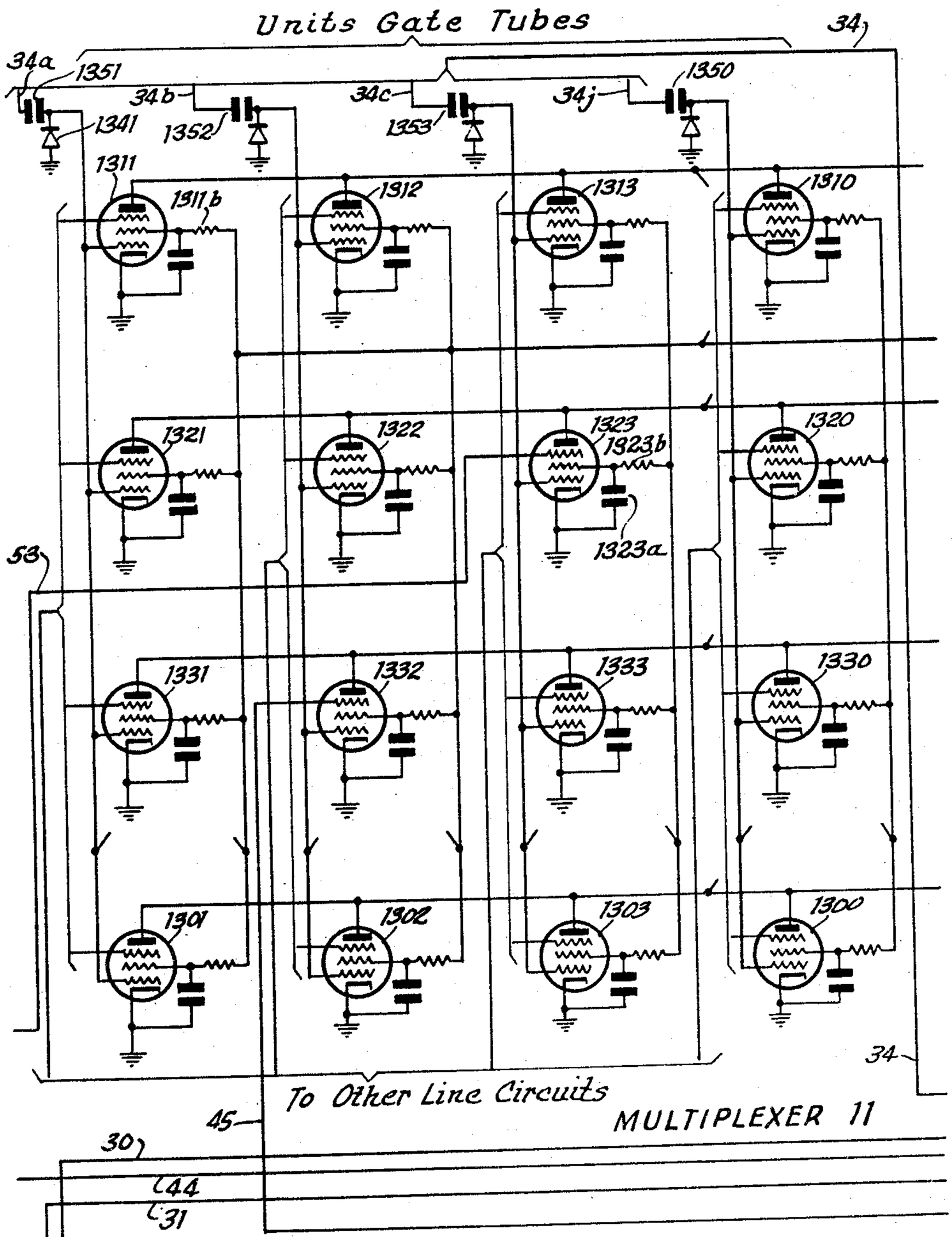

Fig. 13

INVENTOR.
ROBERT B. TROUSDALE
BY
T. L. Bowen
Atty

SELECTOR CIRCUIT

Original Filed Sept. 21, 1950 49 Sheets-Sheet 16

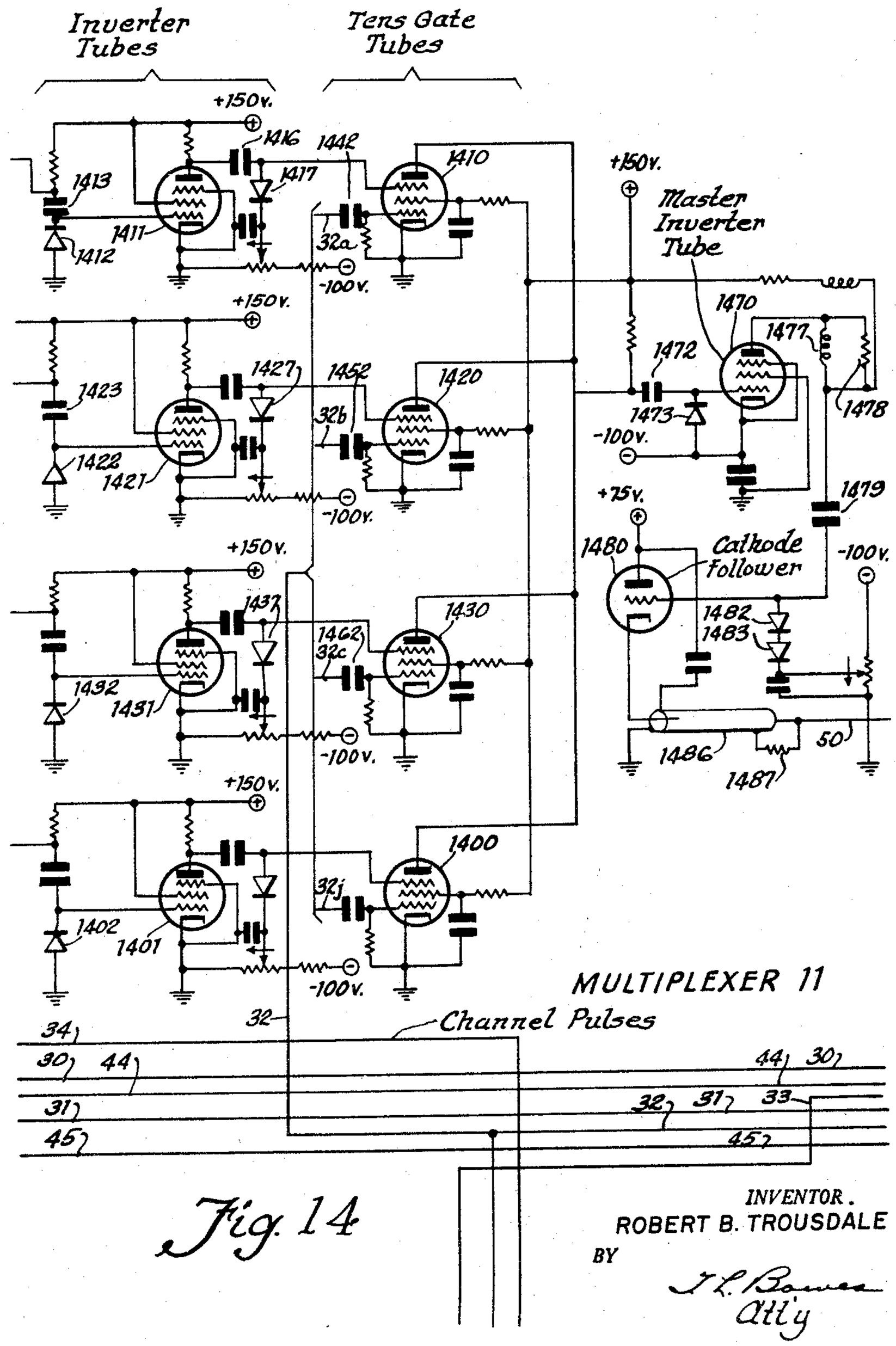

Fig. 14

INVENTOR.
ROBERT B. TROUSDALE
BY
J. L. Bowen
Att'y

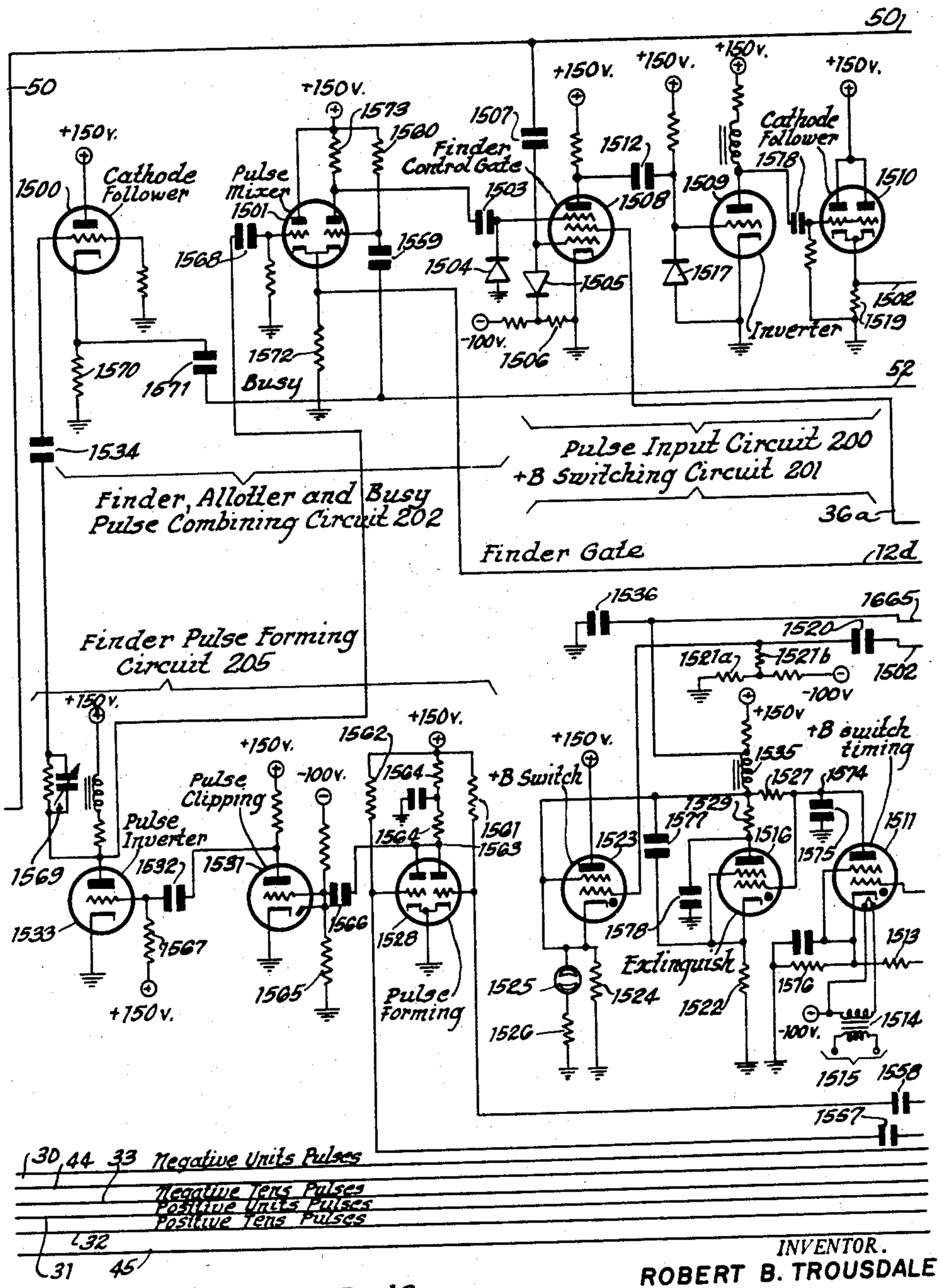

FINDER 12a

Fig. 15

INVENTOR.
ROBERT B. TROUSDALE
BY
J. L. Bowen
Atty

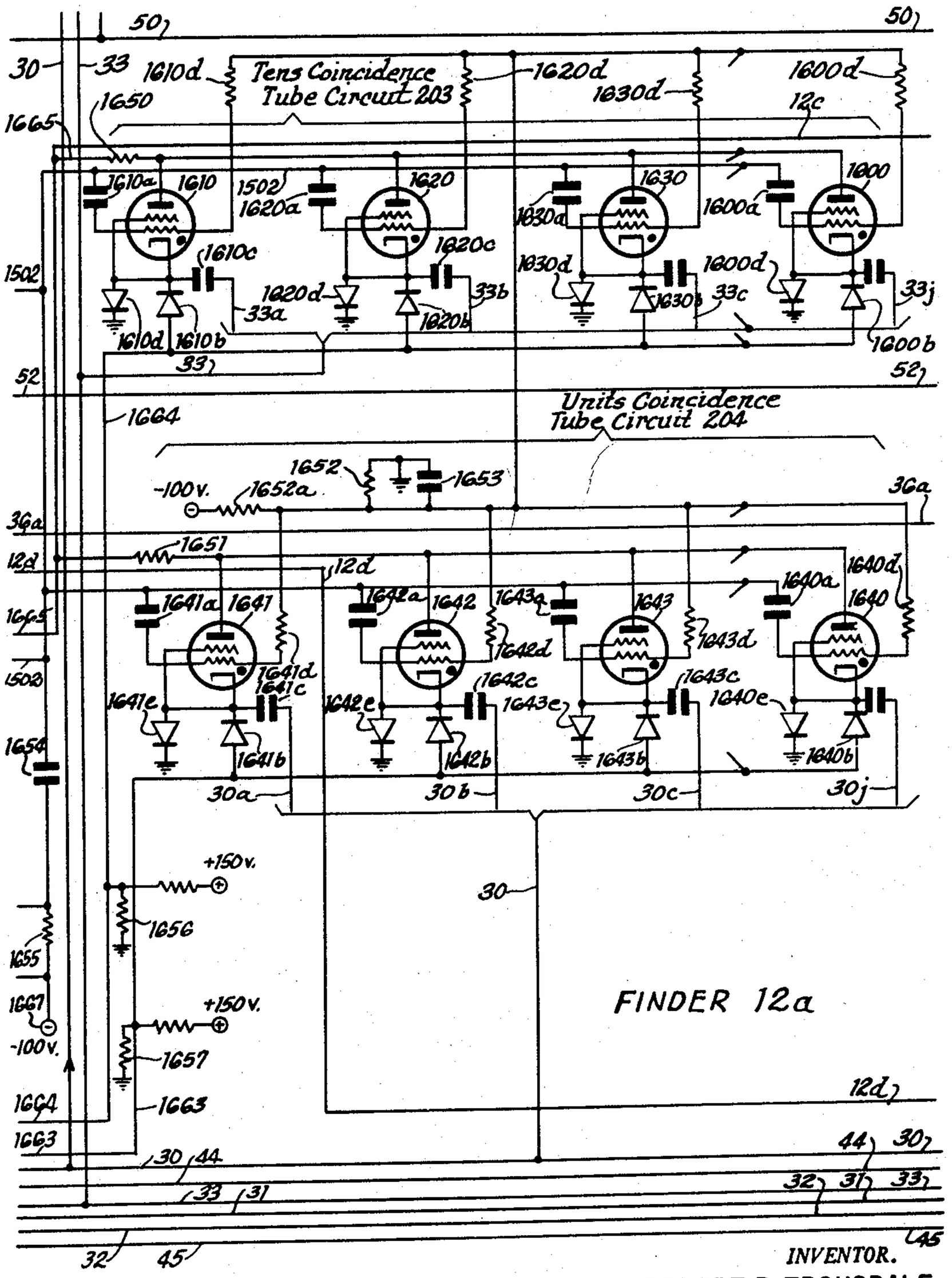

Fig. 16

INVENTOR.
ROBERT B. TROUSDALE
BY J. L. Bowen
Att'y

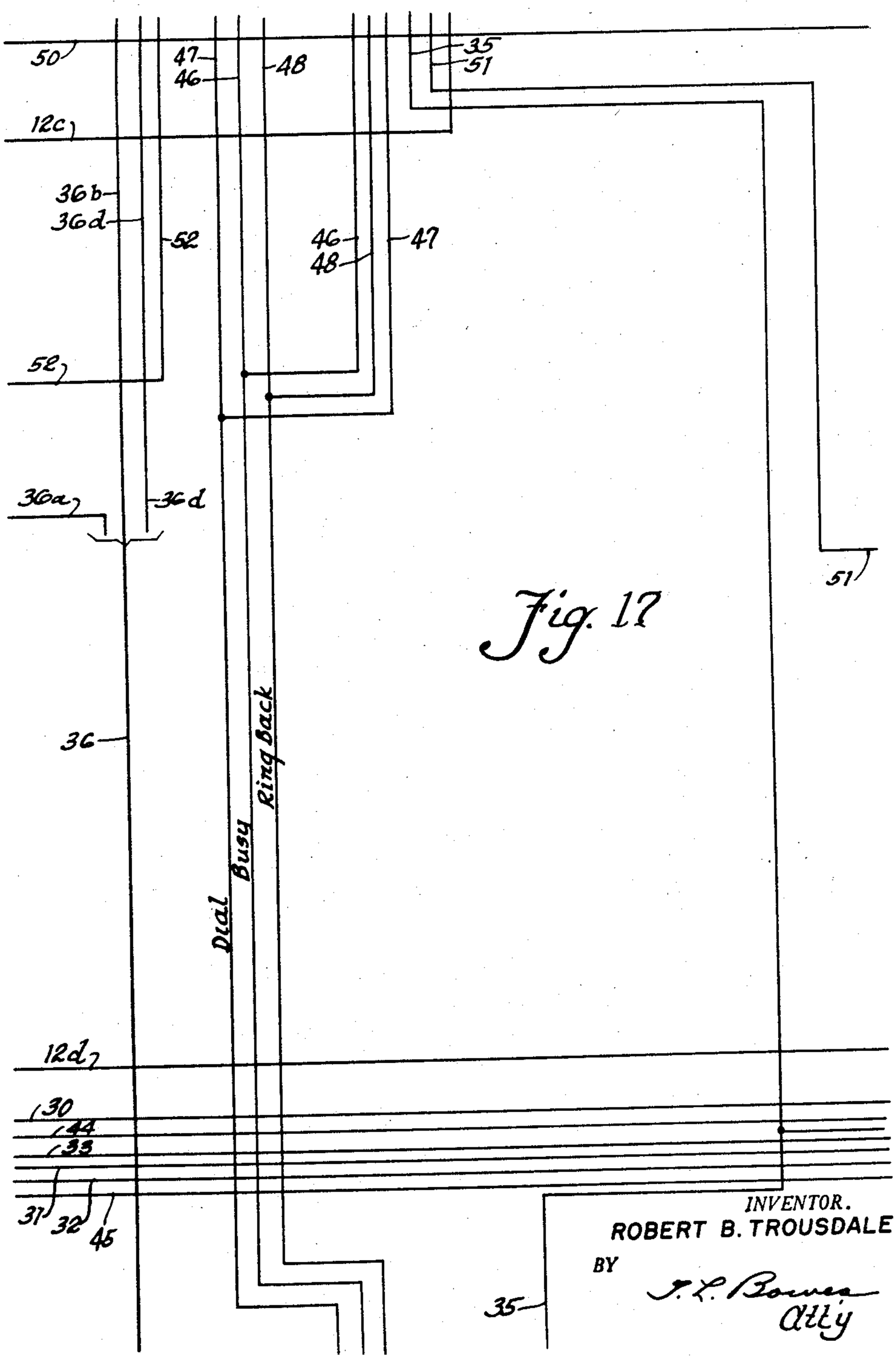

Fig. 17

INVENTOR.
ROBERT B. TROUSDALE
BY
J. L. Bowen
Atty

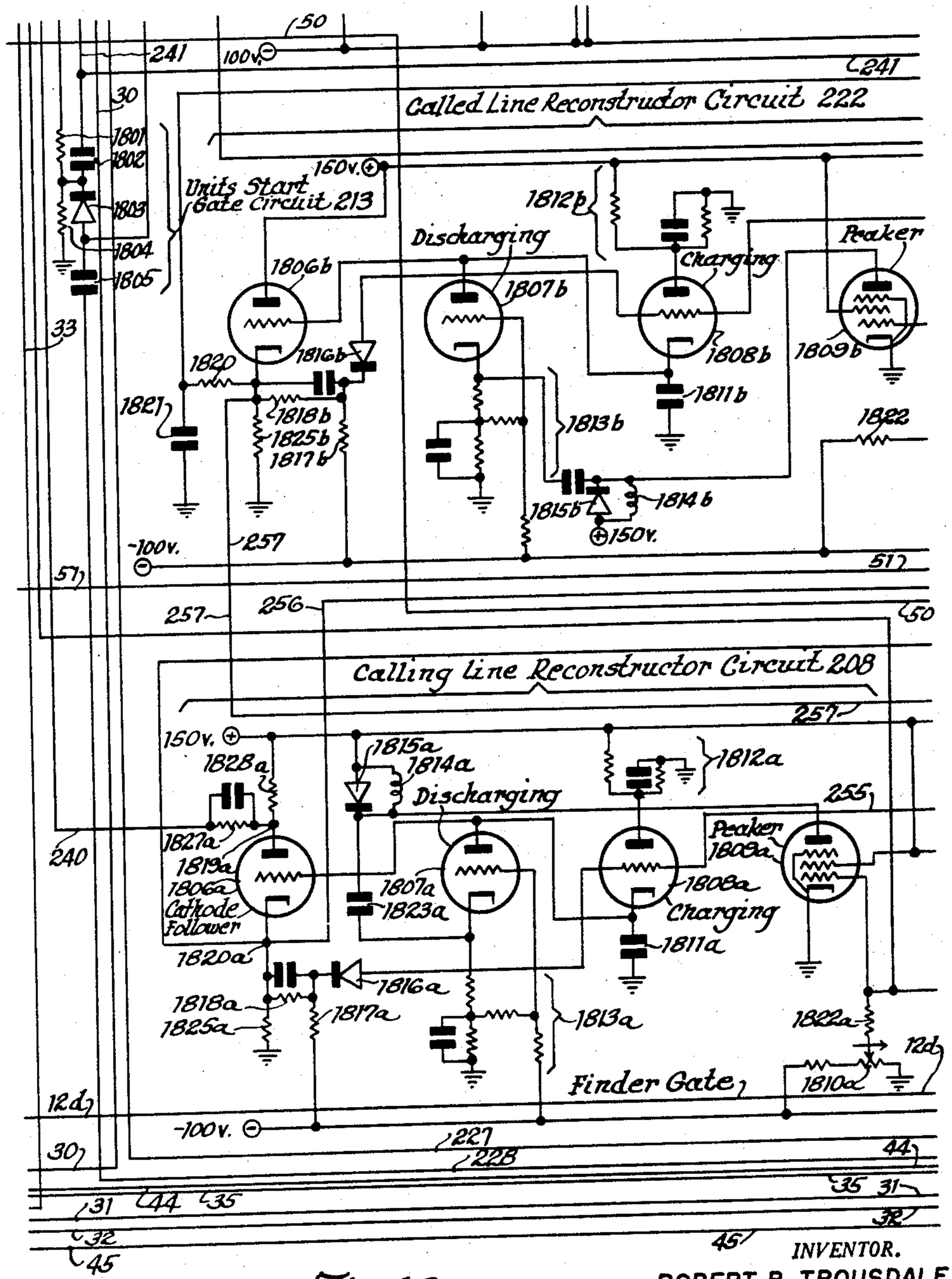

Fig. 18
CONNECTOR 12b

INVENTOR.
ROBERT B. TROUSDALE
BY
J. L. Bowen
Att'y

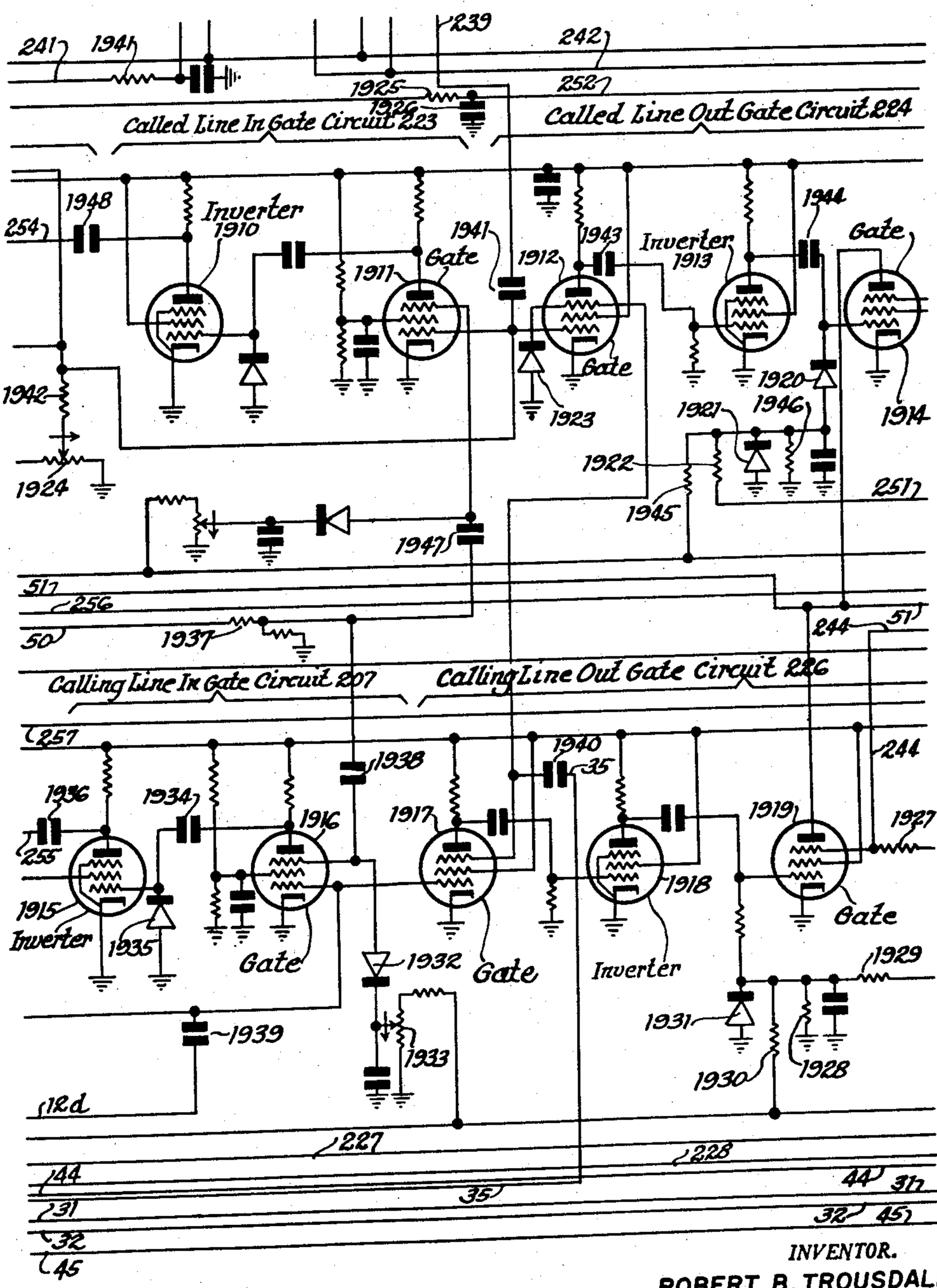

Fig. 19
CONNECTOR 12b

INVENTOR.
ROBERT B. TROUSDALE
BY
T. L. Bowen
Att'y

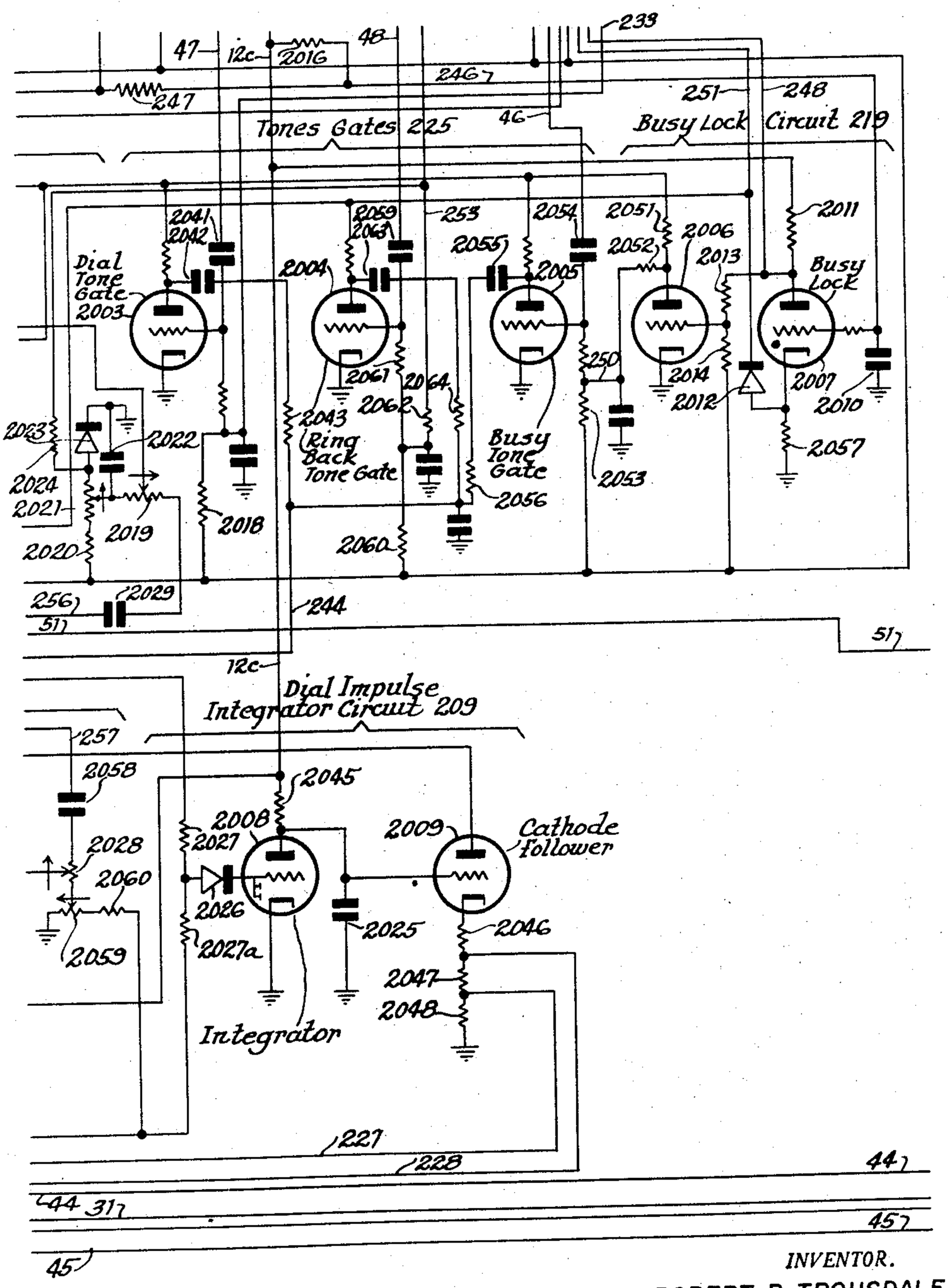

Fig. 20
CONNECTOR 12 b

INVENTOR.
ROBERT B. TROUSDALE
BY
J. L. Bowen
Atty

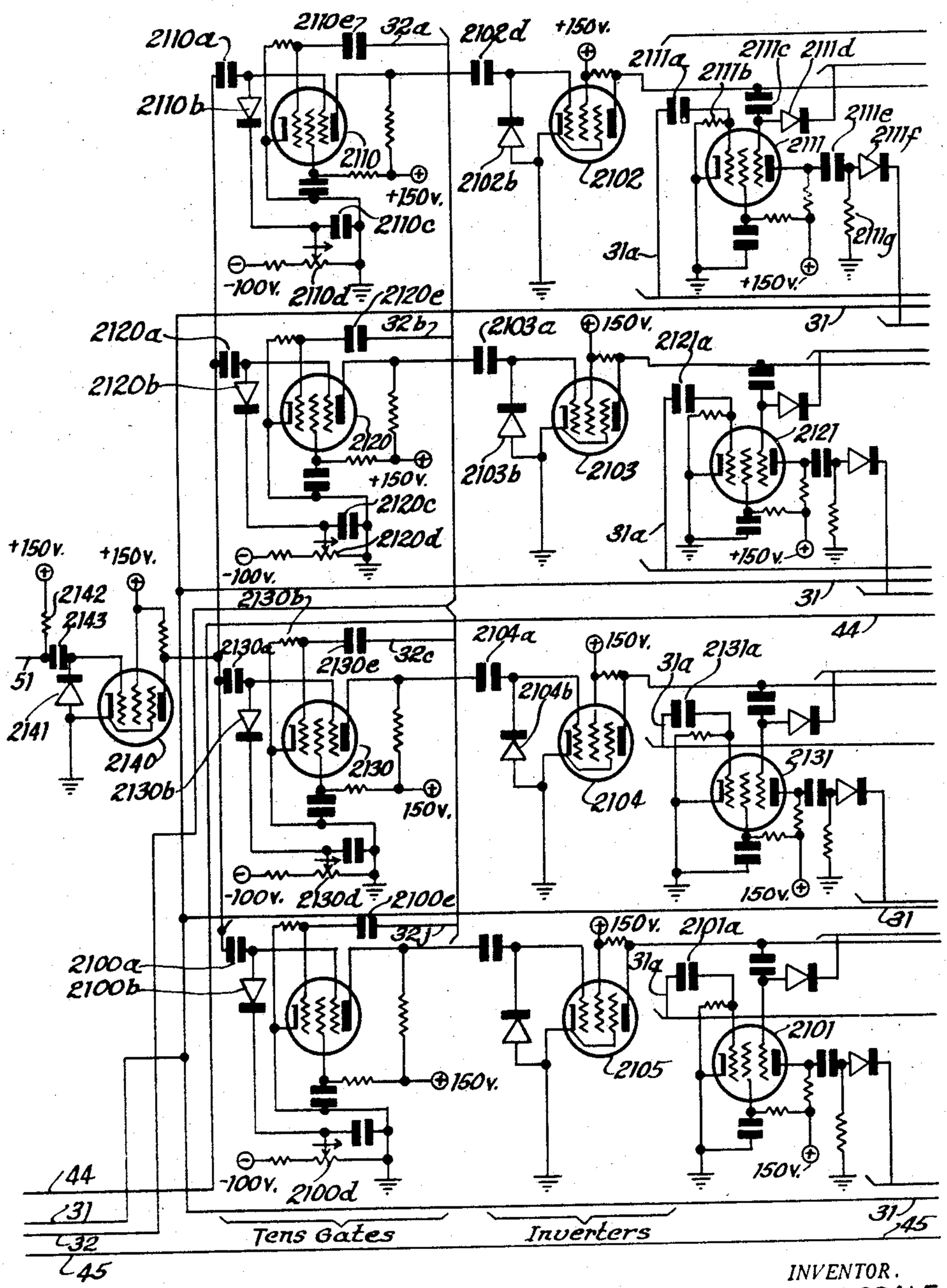

Fig. 21
DISTRIBUTOR 15

INVENTOR.
ROBERT B. TROUSDALE
BY
J. L. Bowie
Att'y

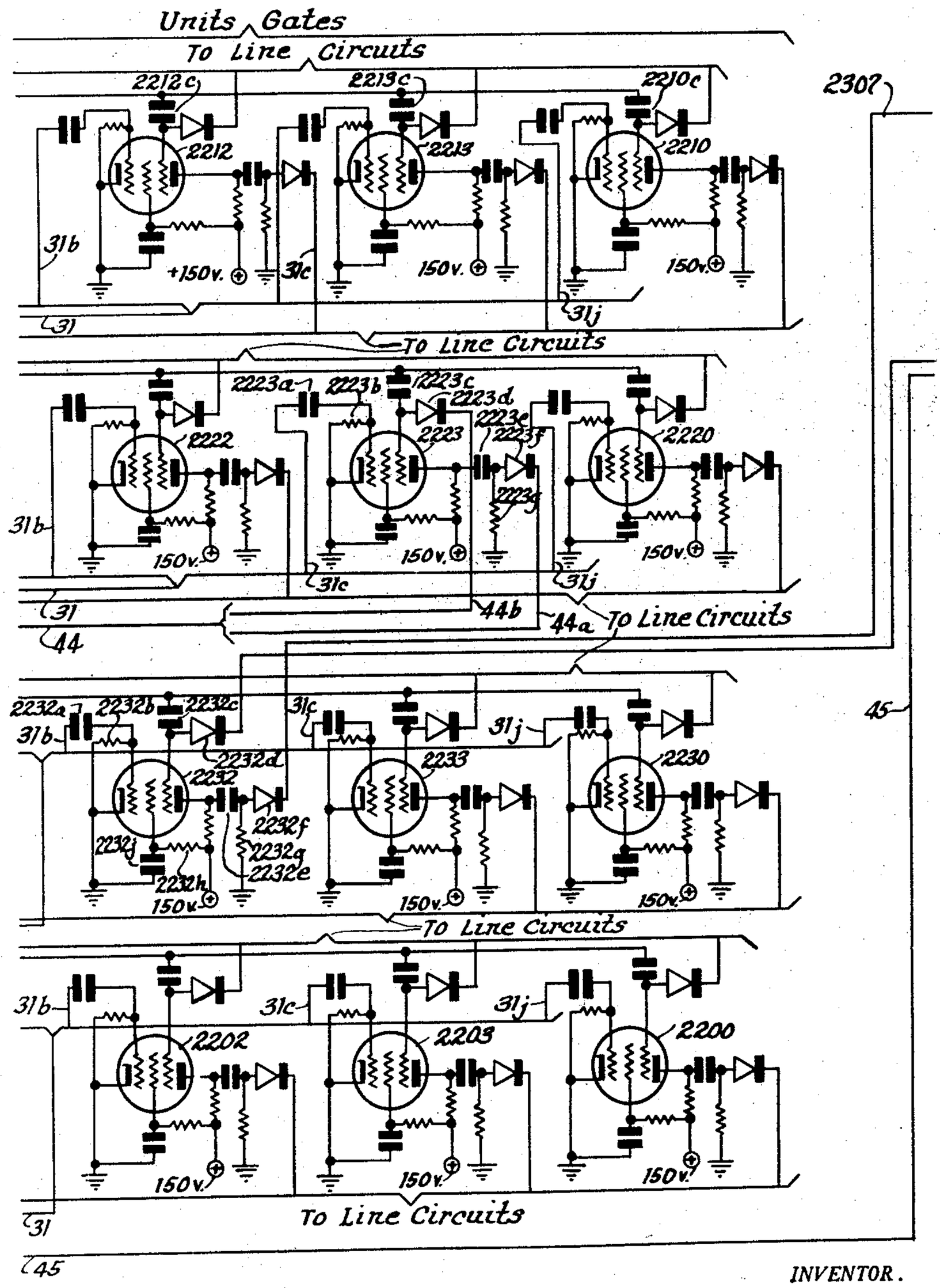

Fig. 22
DISTRIBUTOR 15

INVENTOR.
ROBERT B. TROUSDALE
BY
T. L. Bowen
Att'y

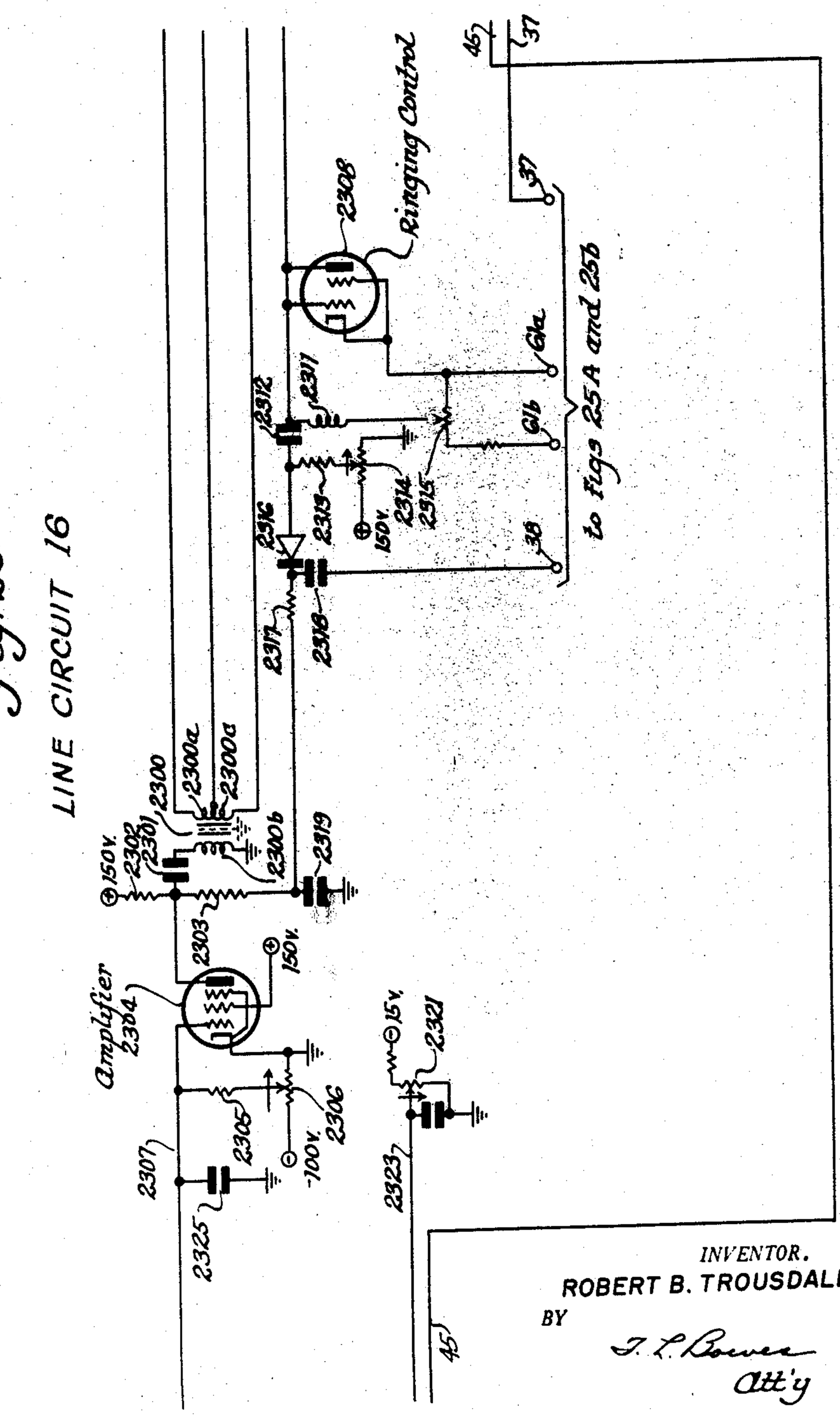
Fig. 23
LINE CIRCUIT 16
Ringing Control
Amplifier
to Figs 25A and 25B
150V.
-100V.
15V.
INVENTOR.
ROBERT B. TROUSDALE
BY
T. L. Bowen
Att'y

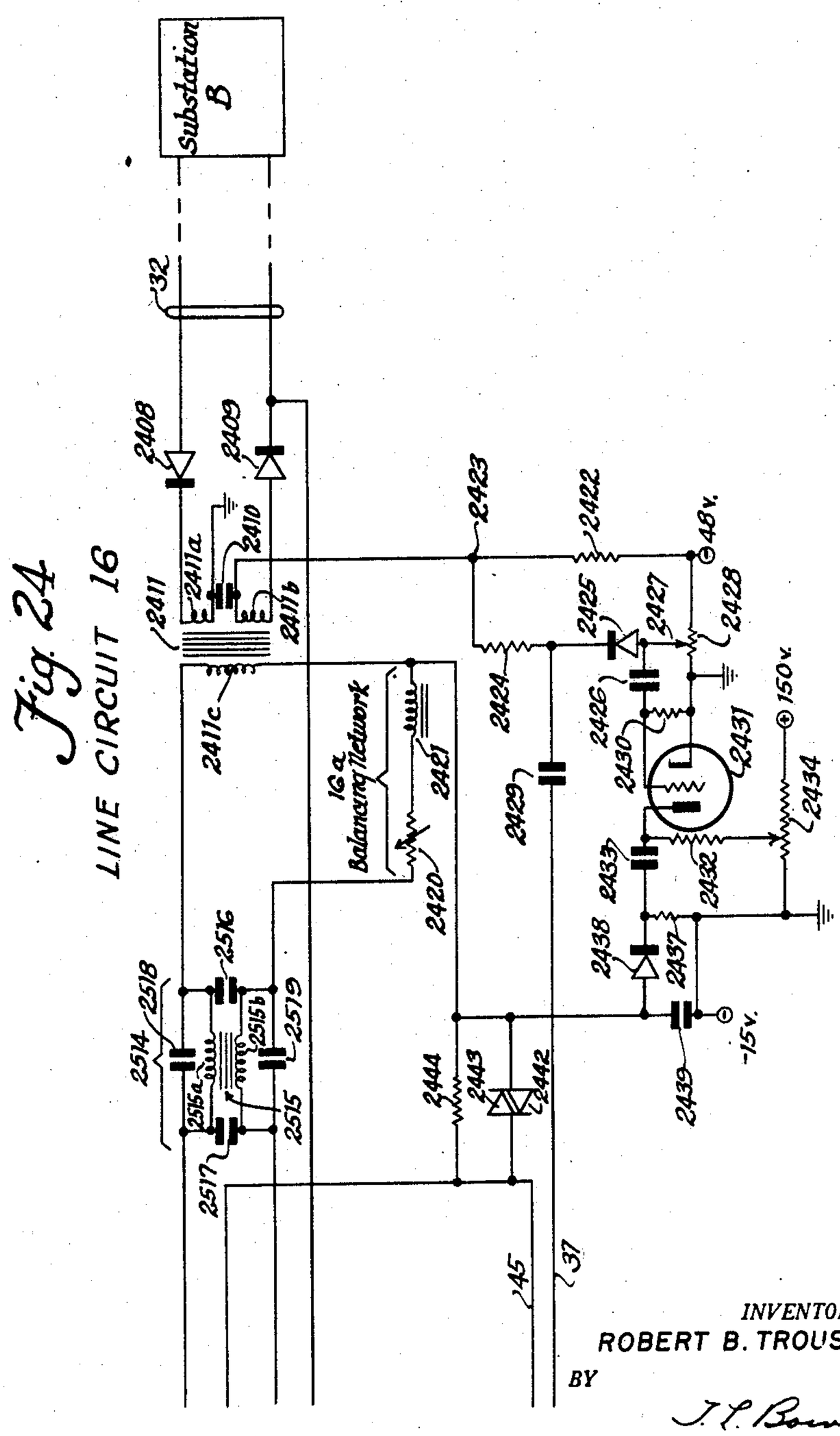

Fig. 24
LINE CIRCUIT 16

INVENTOR.
ROBERT B. TROUSDALE
BY
J. P. Bonner
Att'y

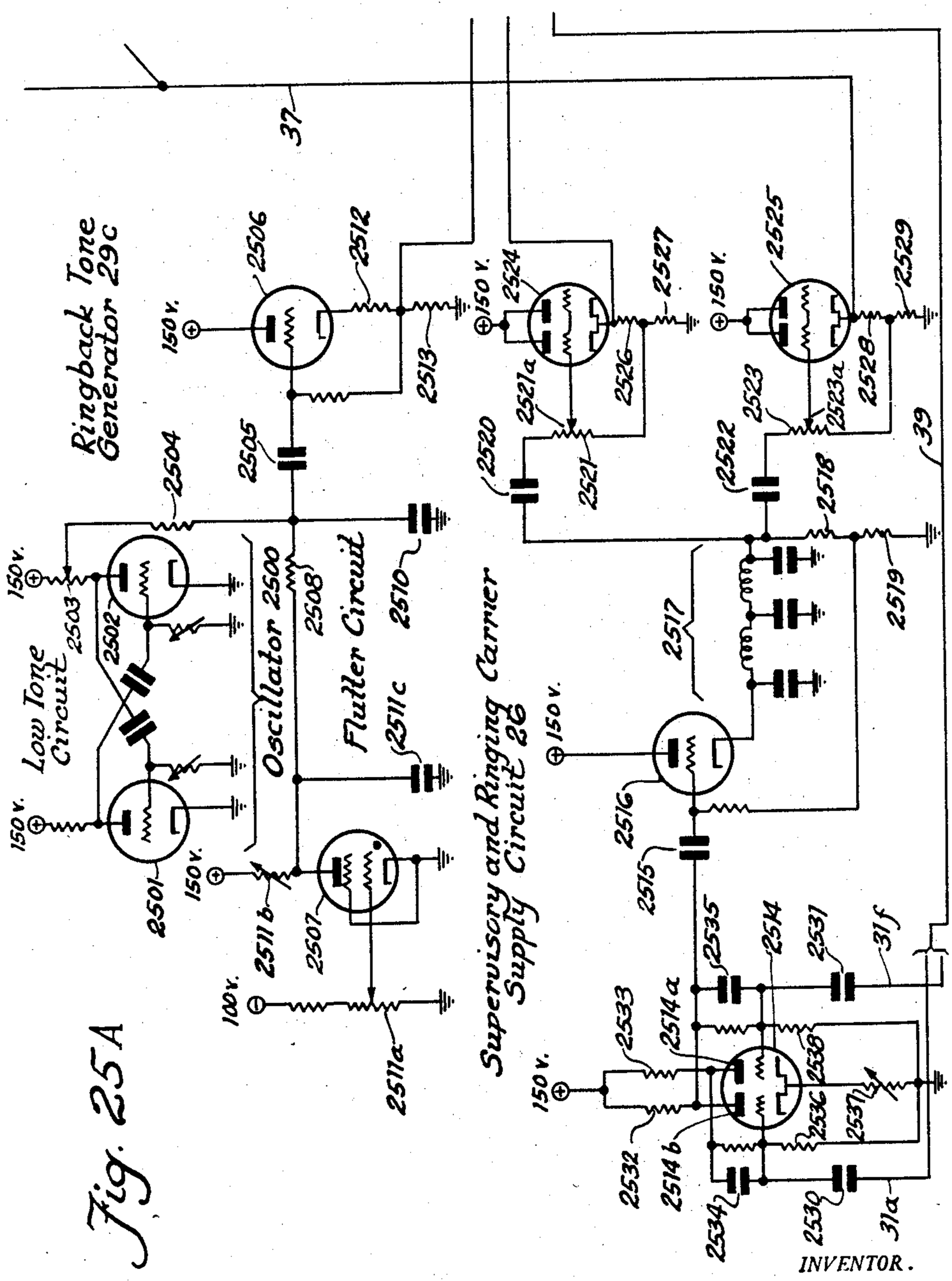

Fig. 25A

INVENTOR.
ROBERT B. TROUSDALE
BY
J. L. Bowen
Atty

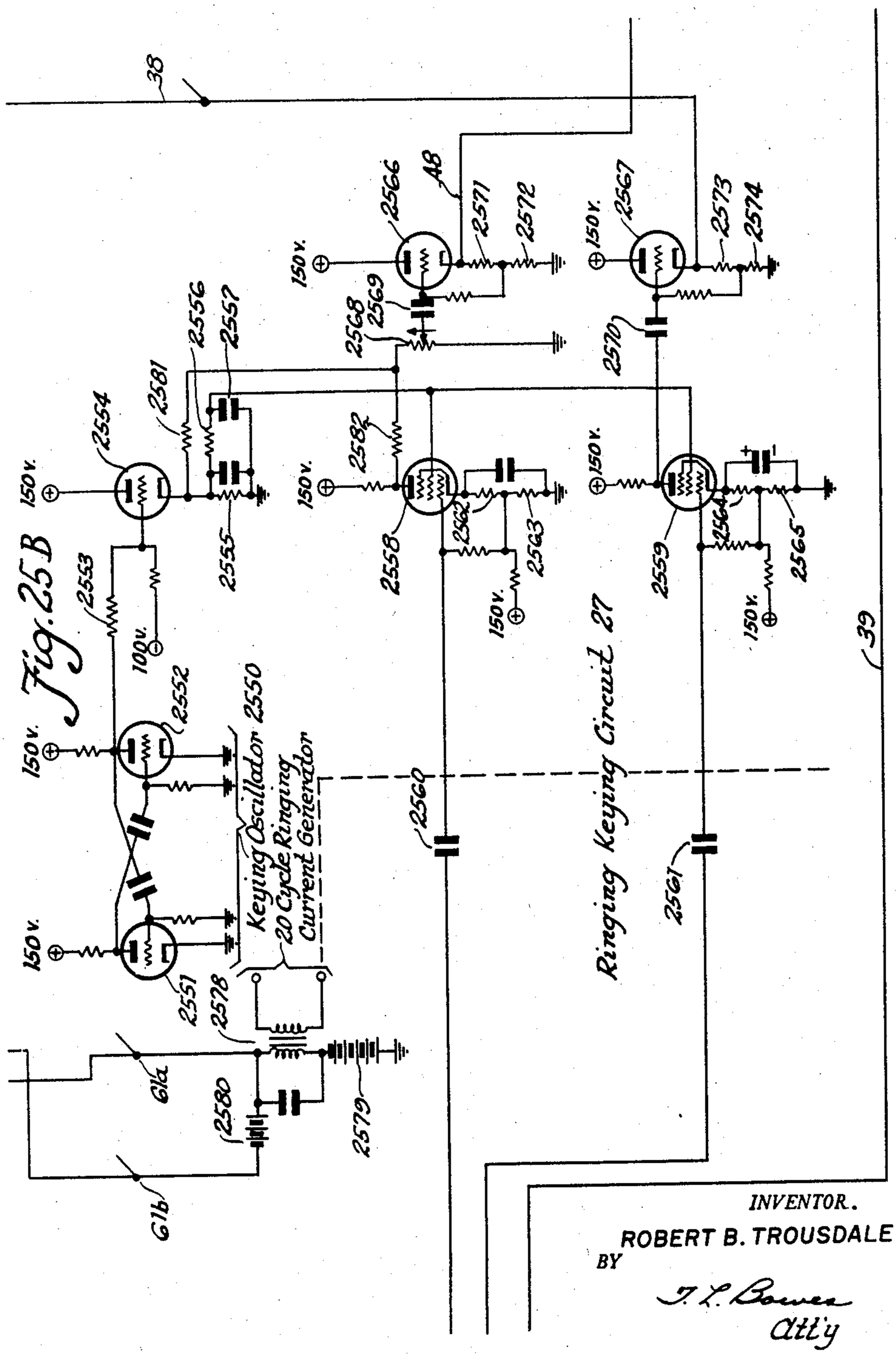

INVENTOR.
ROBERT B. TROUSDALE
BY
T. L. Bowen
Atty

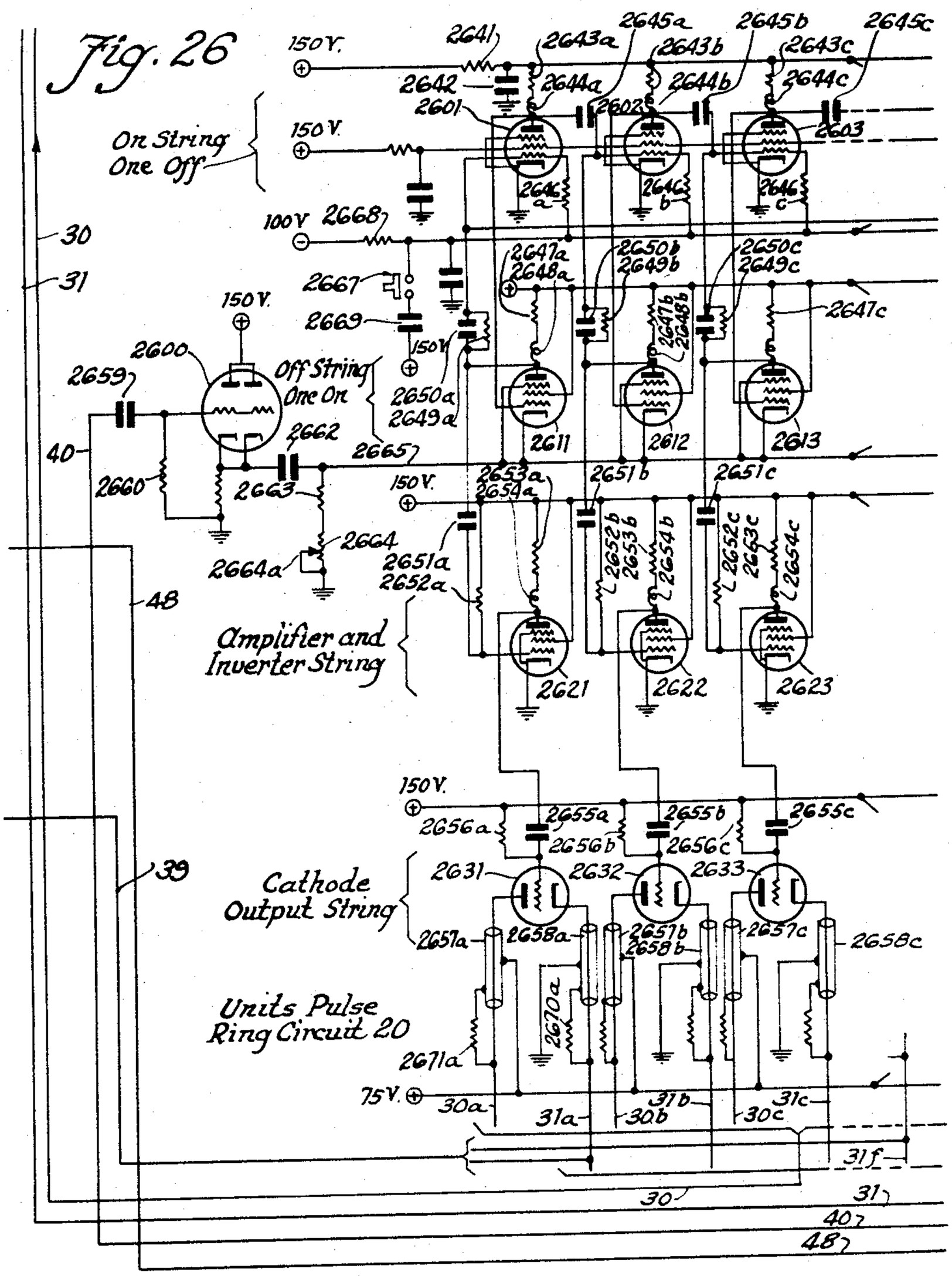

INVENTOR.
ROBERT B. TROUSDALE
BY
T. L. Bowen
Atty

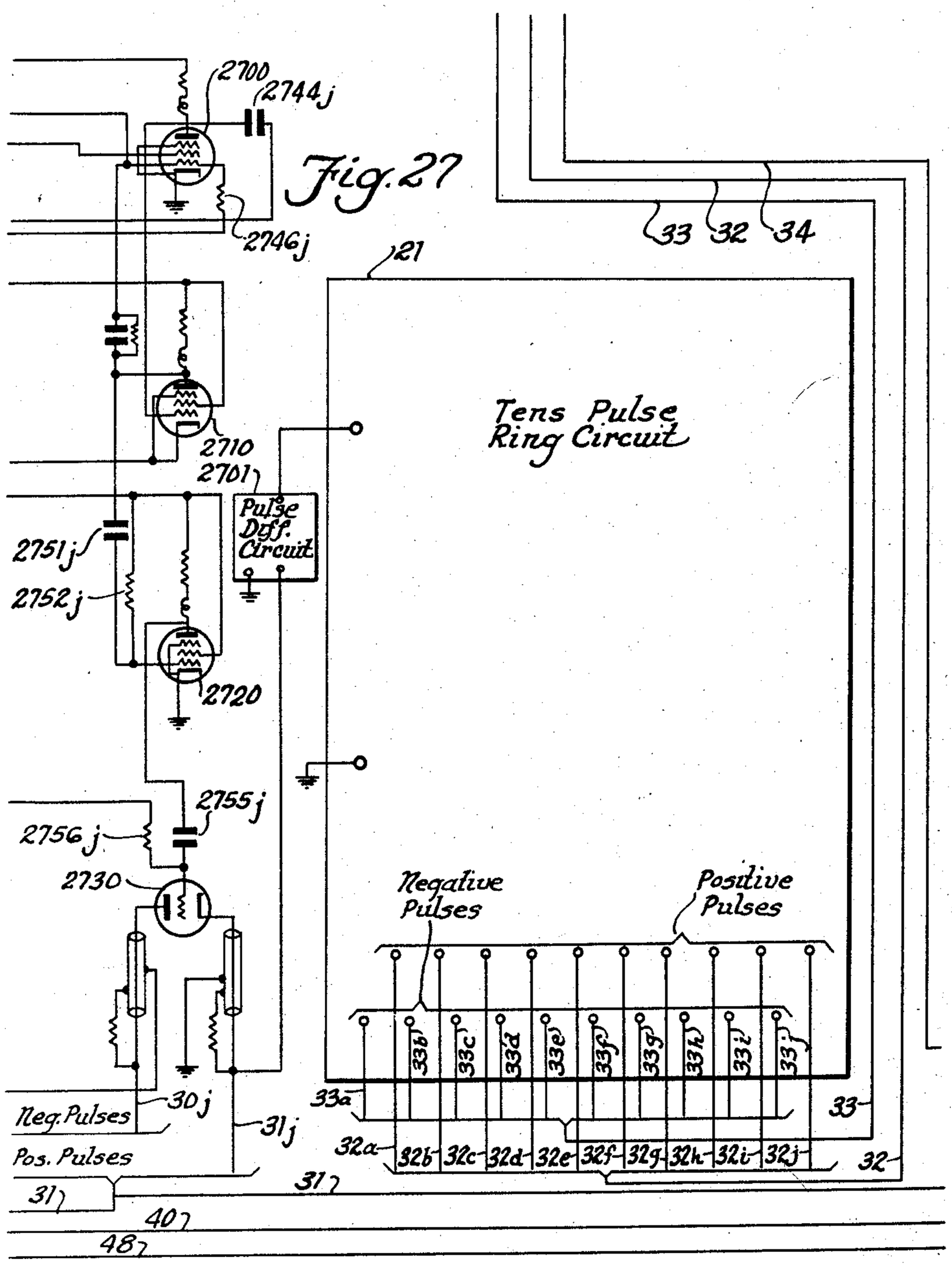

INVENTOR.
ROBERT B. TROUSDALE
BY
T. L. Bowen
Att'y

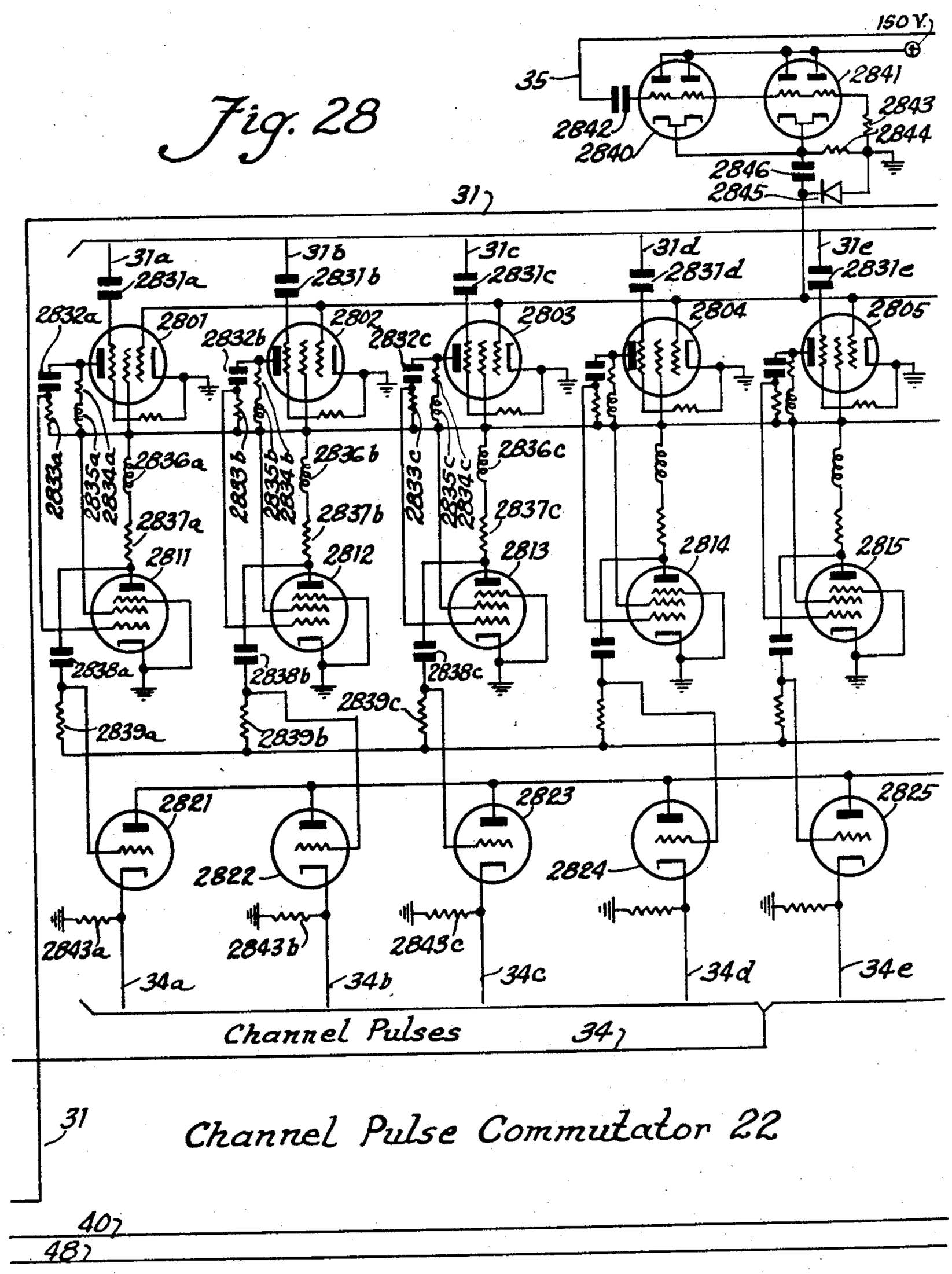

INVENTOR.
ROBERT B. TROUSDALE
BY
J. L. Bowen
Atty

35

Fig. 29

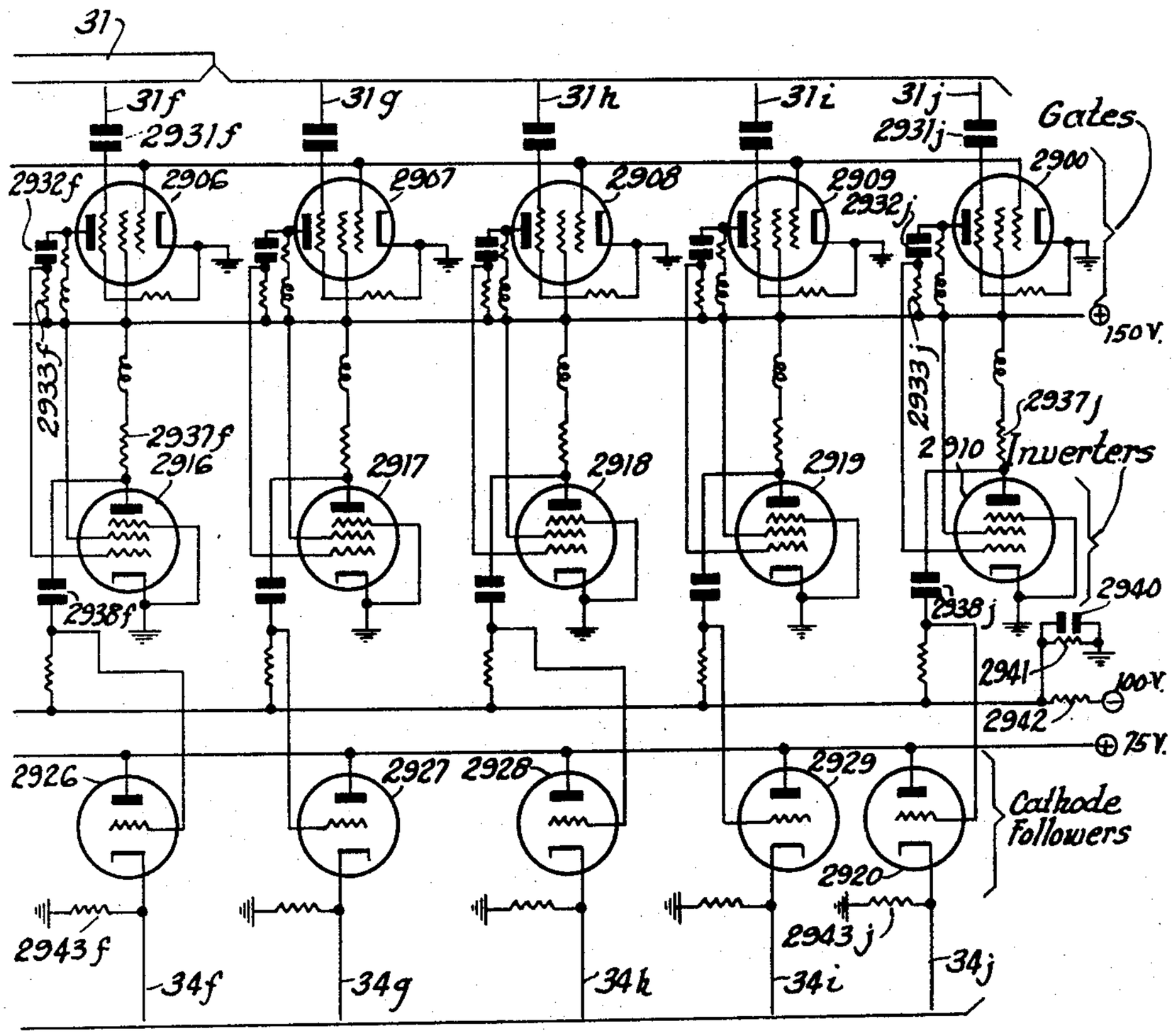

Channel Pulse Commutator 22

40
48

INVENTOR.
ROBERT B. TROUSDALE
BY
J. L. Bowen
Atty

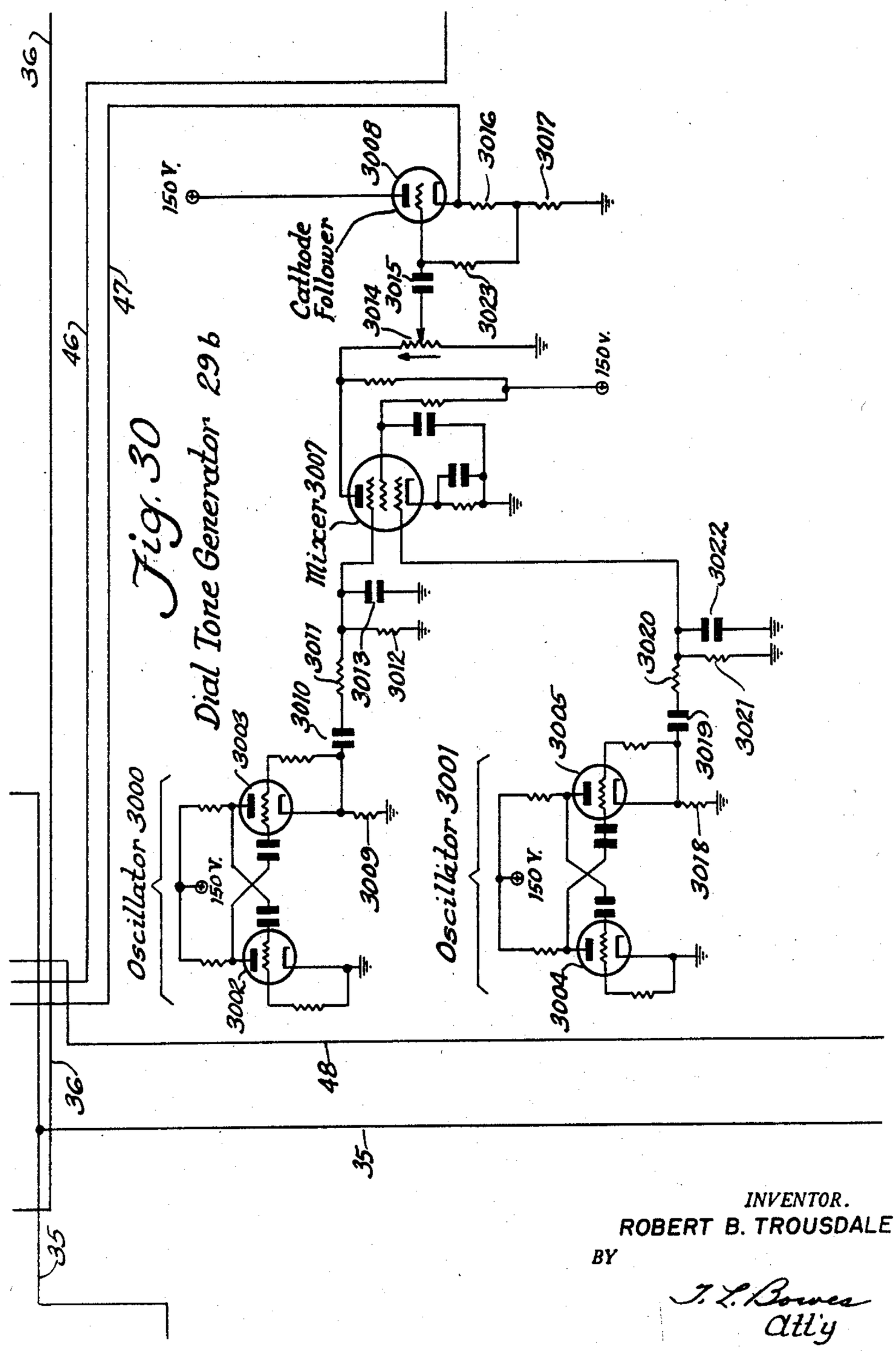

INVENTOR.
ROBERT B. TROUSDALE
BY
T. L. Bowes
Att'y

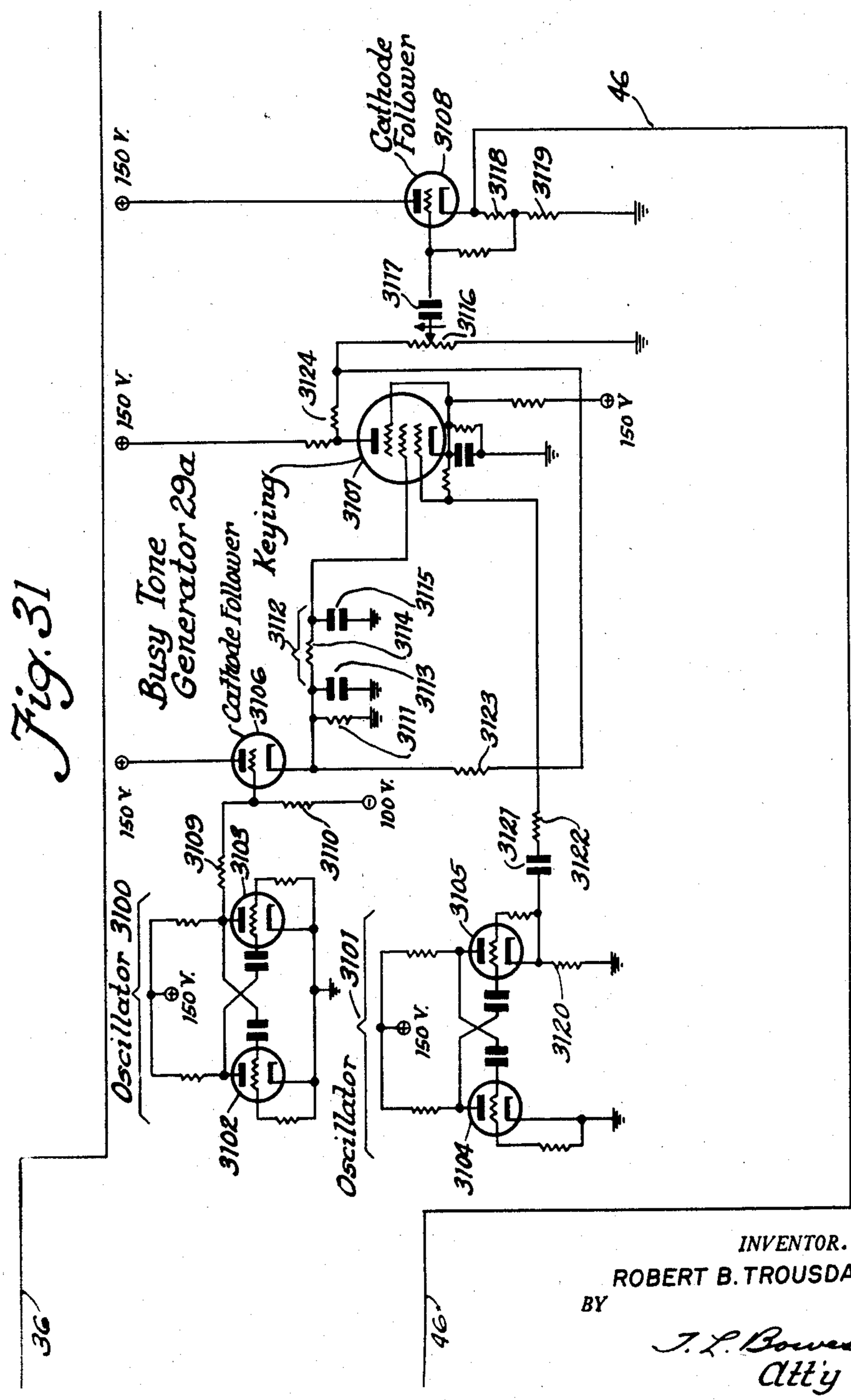

INVENTOR.
ROBERT B. TROUSDALE
BY
T. L. Bowen
Atty

SELECTOR CIRCUIT

Original Filed Sept. 21, 1950 49 Sheets-Sheet 35

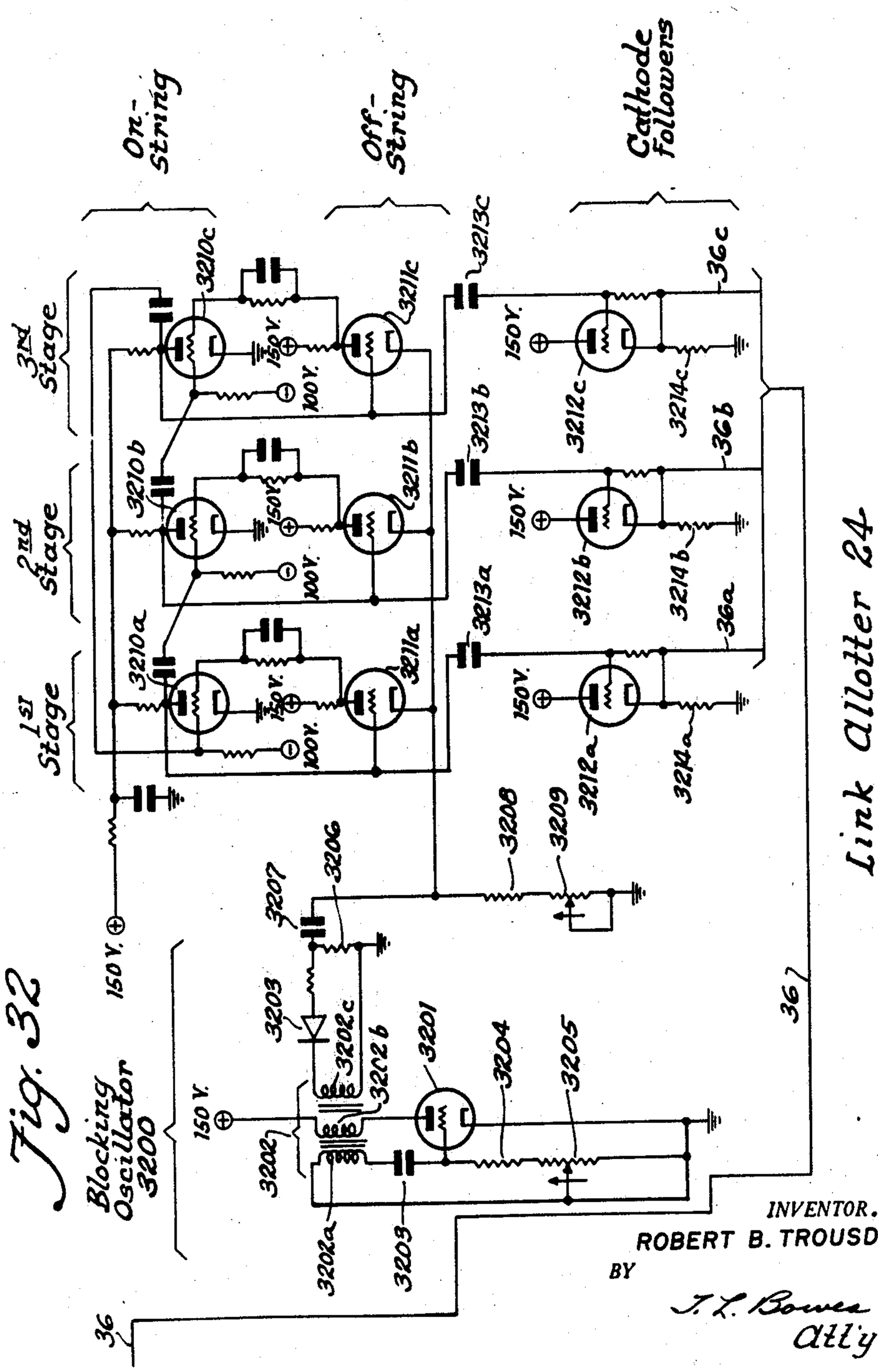

Fig. 32

Link Allotter 24

INVENTOR.
ROBERT B. TROUSDALE
BY
T. L. Bowen
Atty

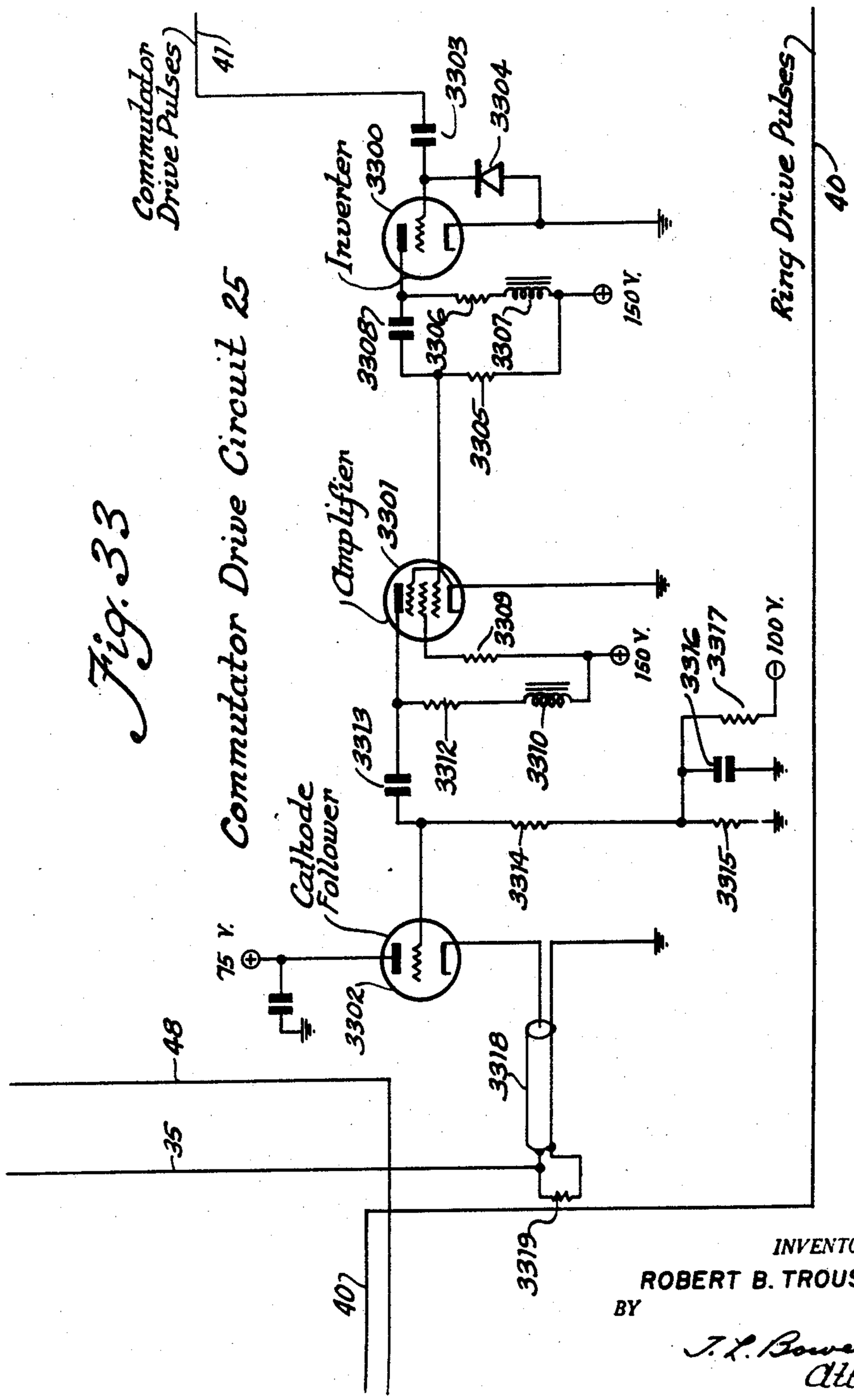

Fig. 33
Commutator Drive Circuit 25

INVENTOR.
ROBERT B. TROUSDALE
BY
T. L. Bowen
Att'y

Fig. 34

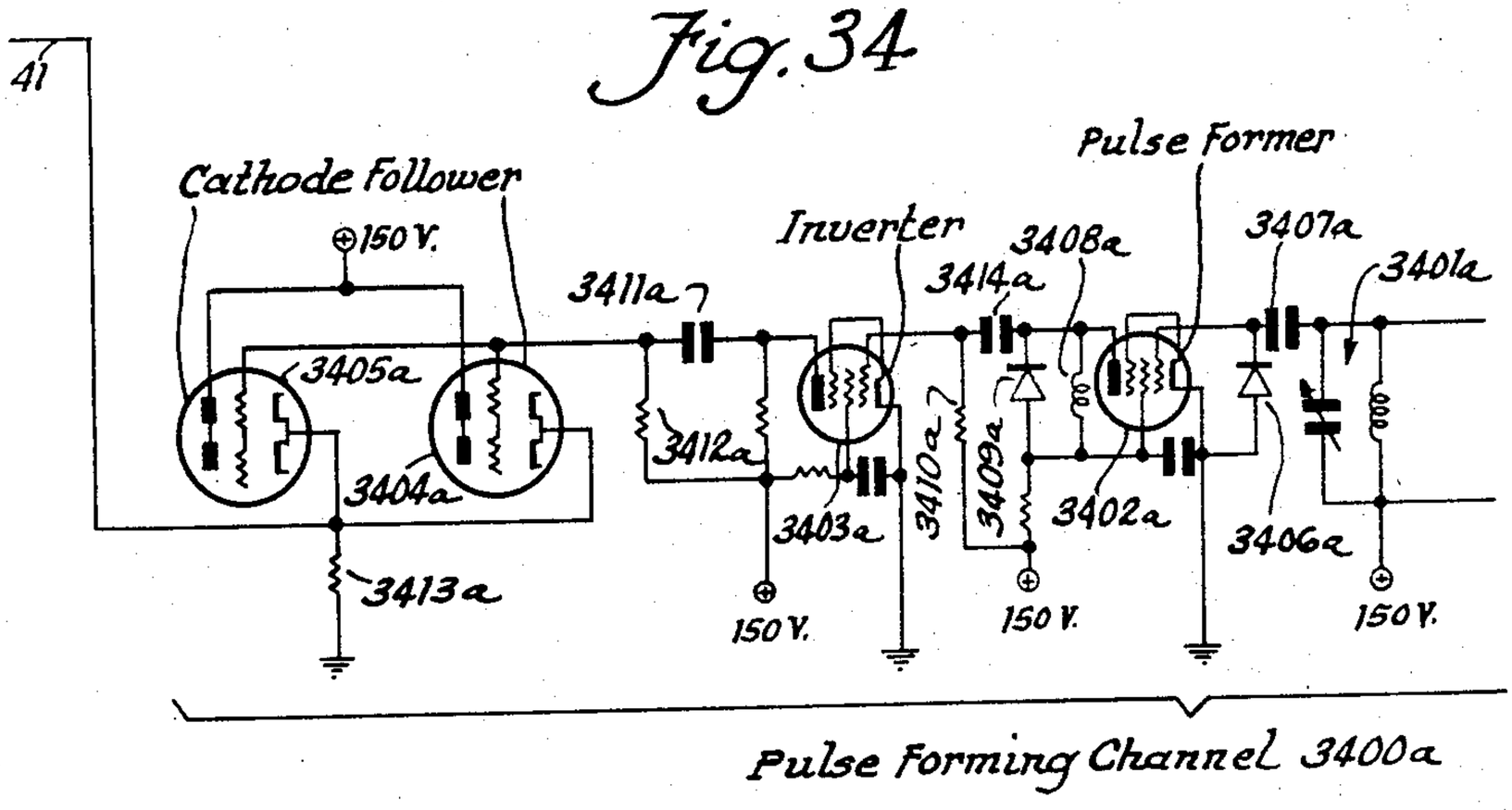

Phase Shift and Pulse Forming Circuit 19

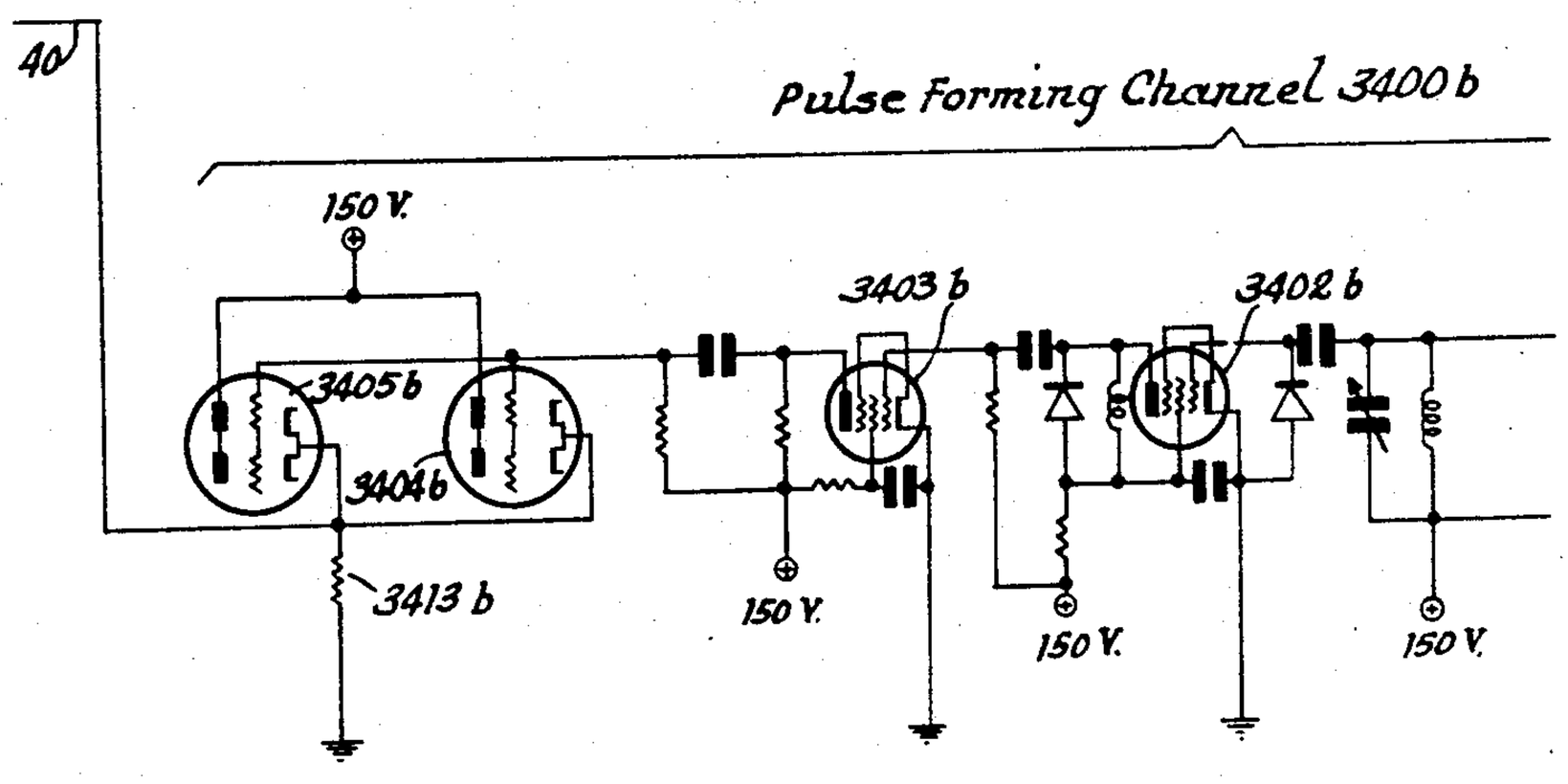

INVENTOR.
ROBERT B. TROUSDALE
BY
T. L. Bowen
Atty

Fig. 35

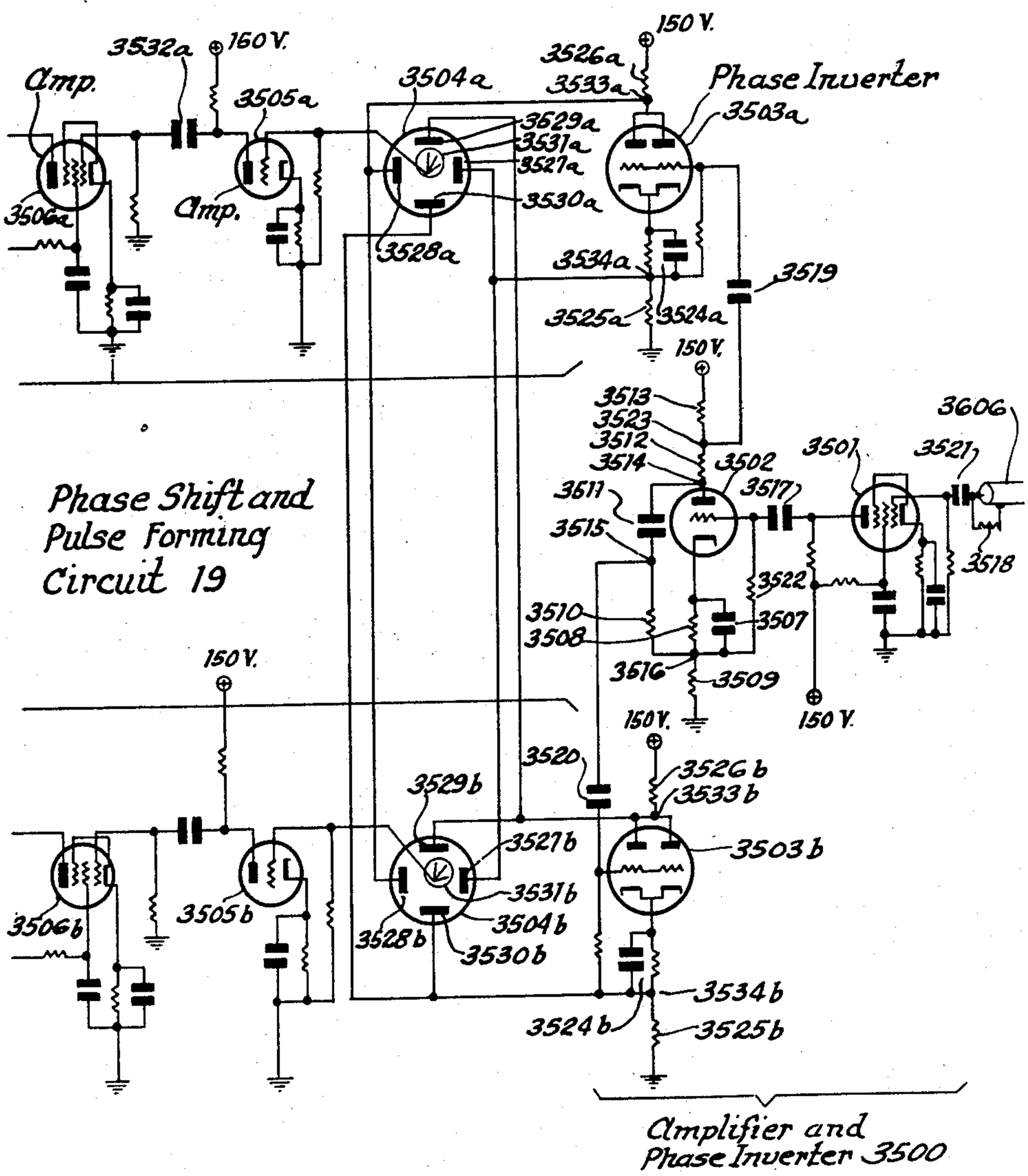

INVENTOR.
ROBERT B. TROUSDALE
BY
J. L. Bowen
Att'y

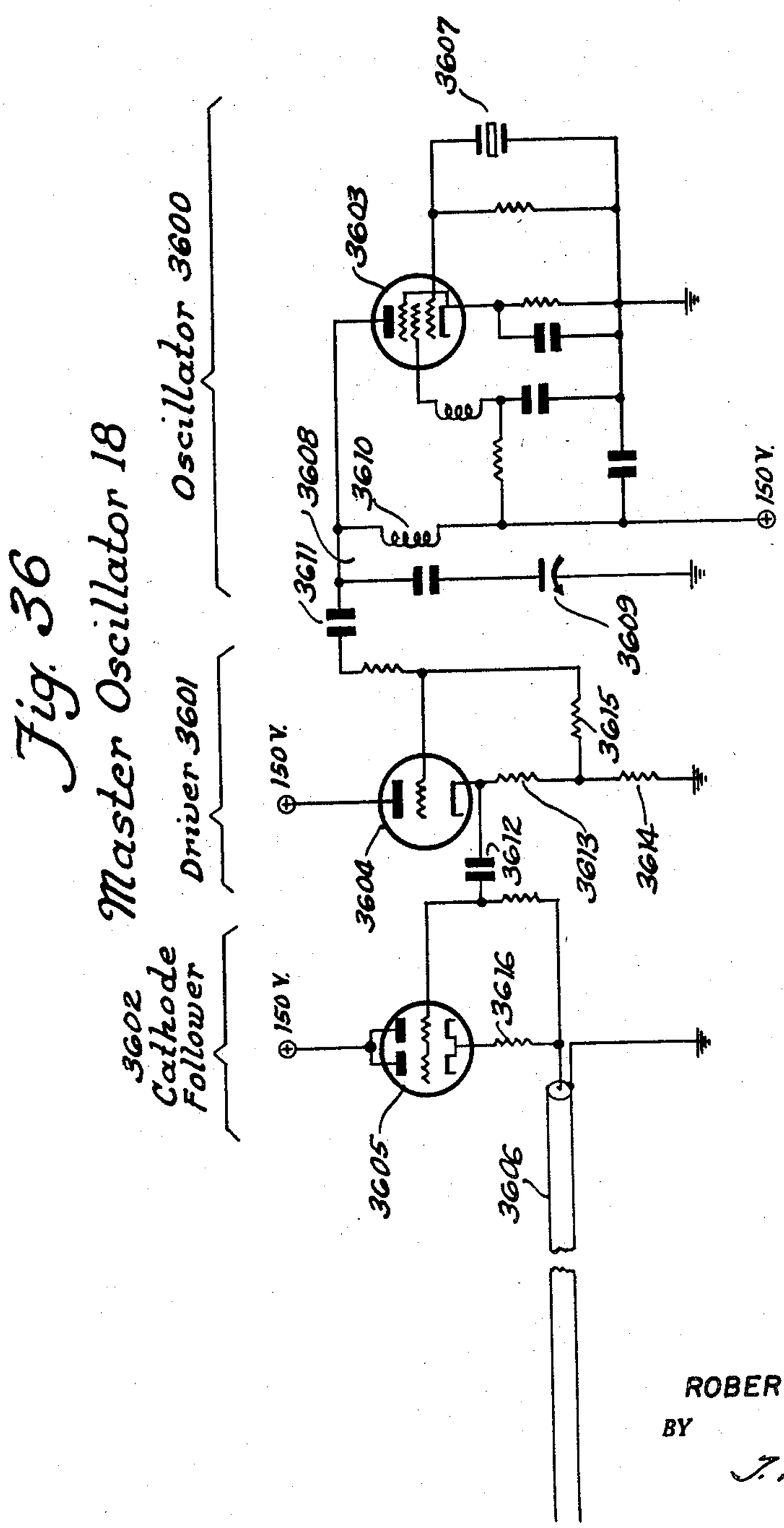

INVENTOR.
ROBERT B. TROUSDALE
BY
J. L. Bowes
Att'y

Fig. 37

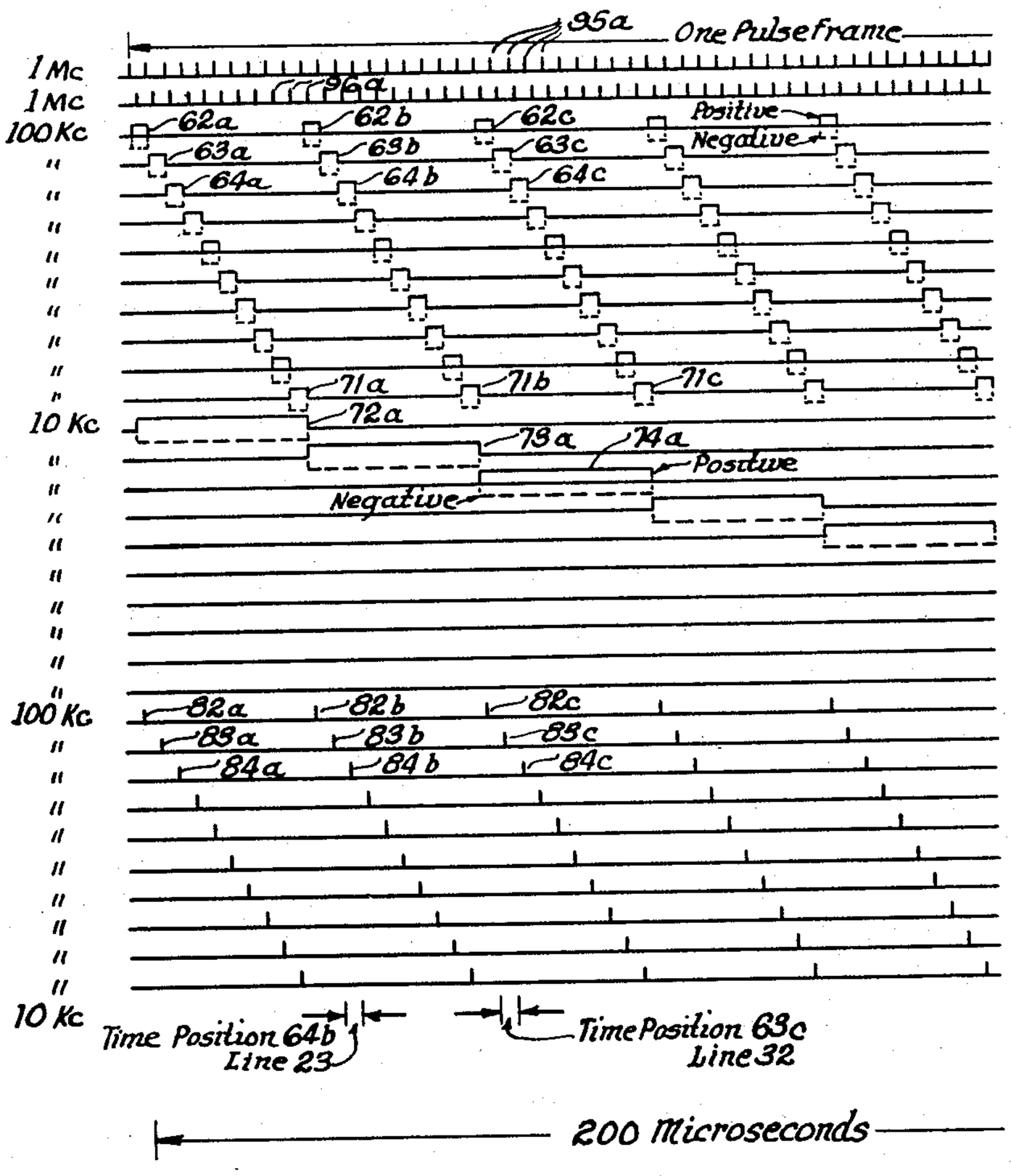

INVENTOR.
ROBERT B. TROUSDALE
BY
J. L. Bowes
Att'y

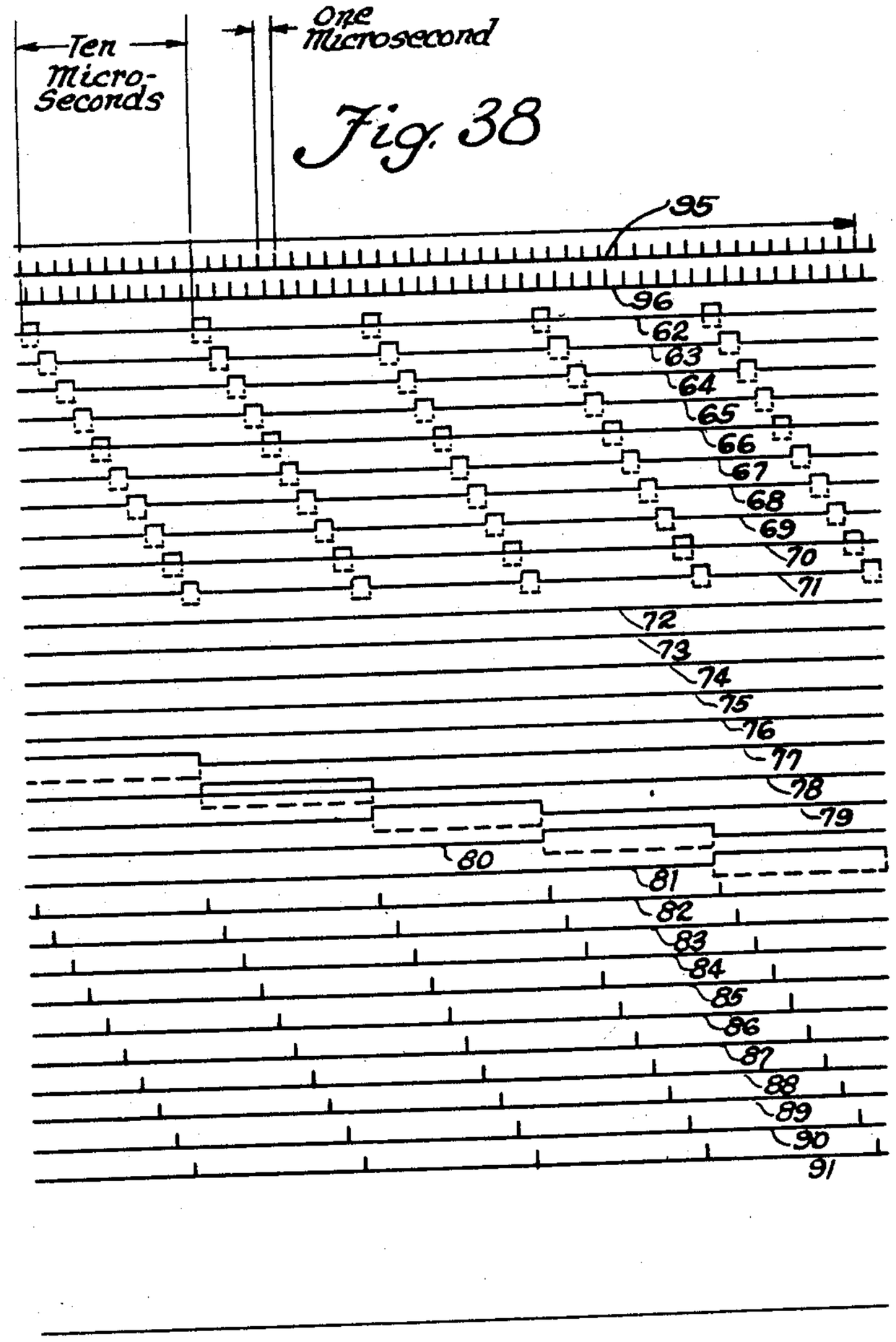

INVENTOR.
ROBERT B. TROUSDALE
BY
J. L. Bowes
Att'y

Fig. 39

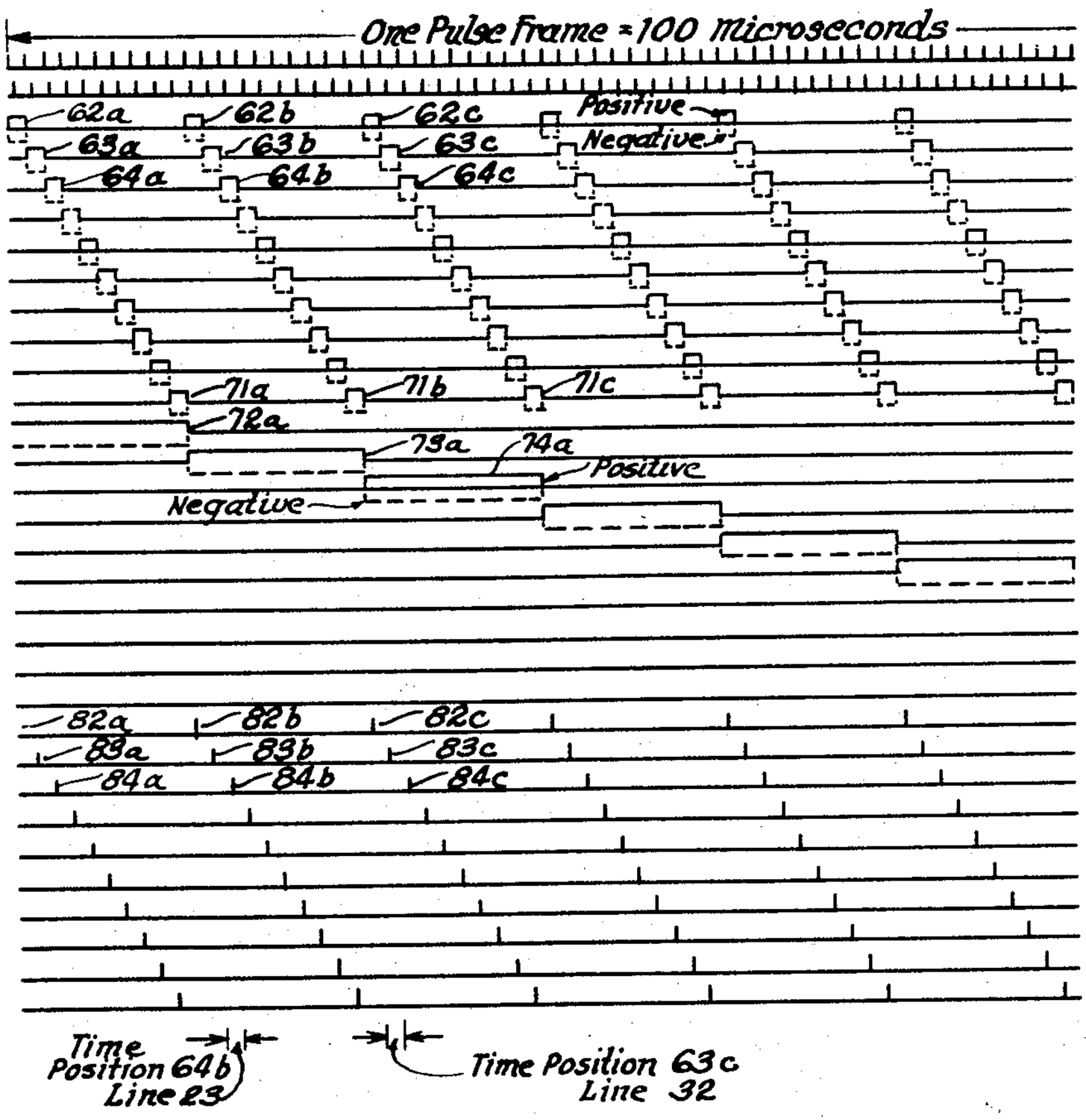

INVENTOR.
ROBERT B. TROUSDALE
BY
J. L. Bowen
Att'y

Fig. 40

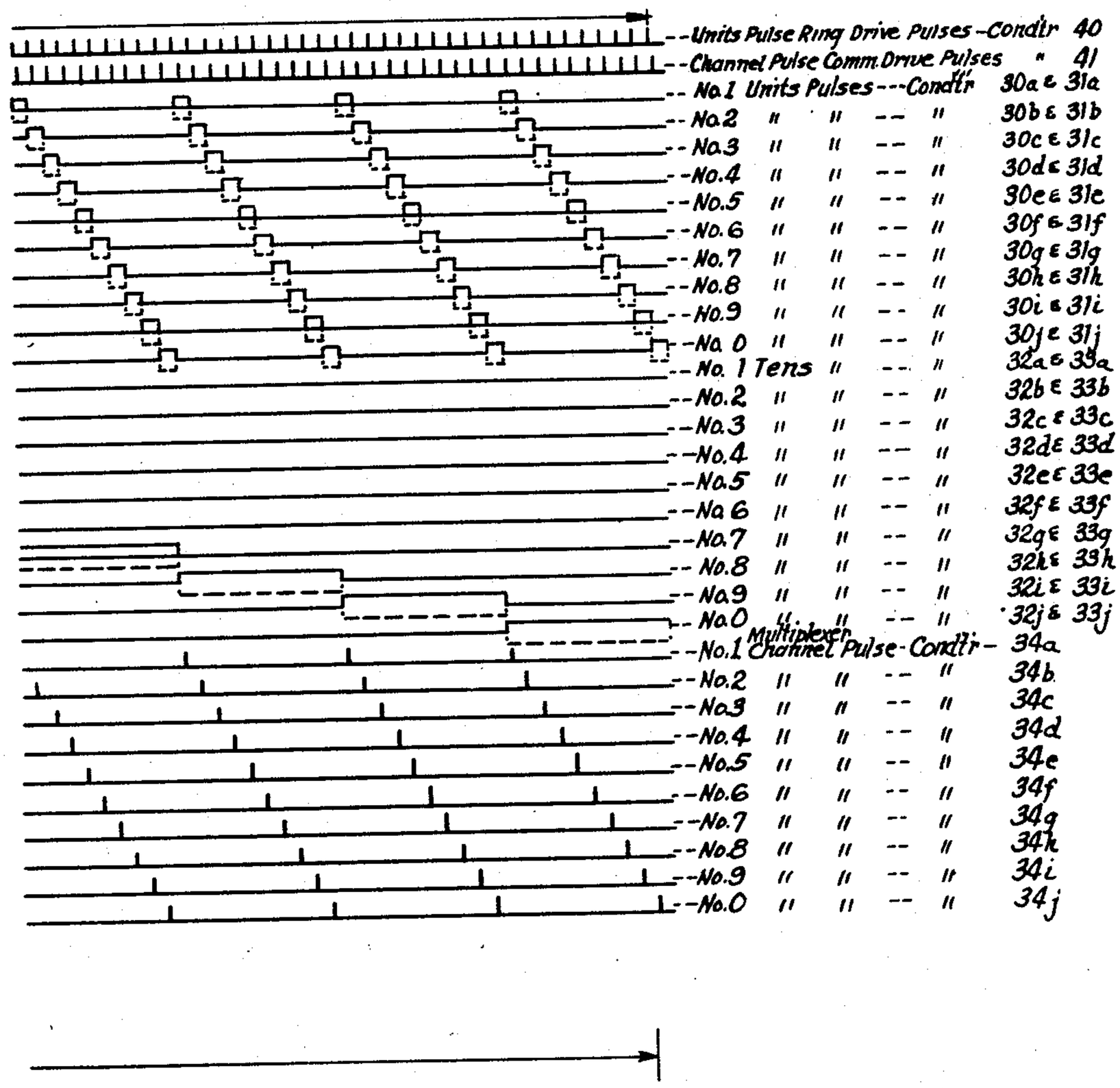

INVENTOR.
ROBERT B. TROUSDALE
BY
T. L. Bowen
Atty

Fig. 41

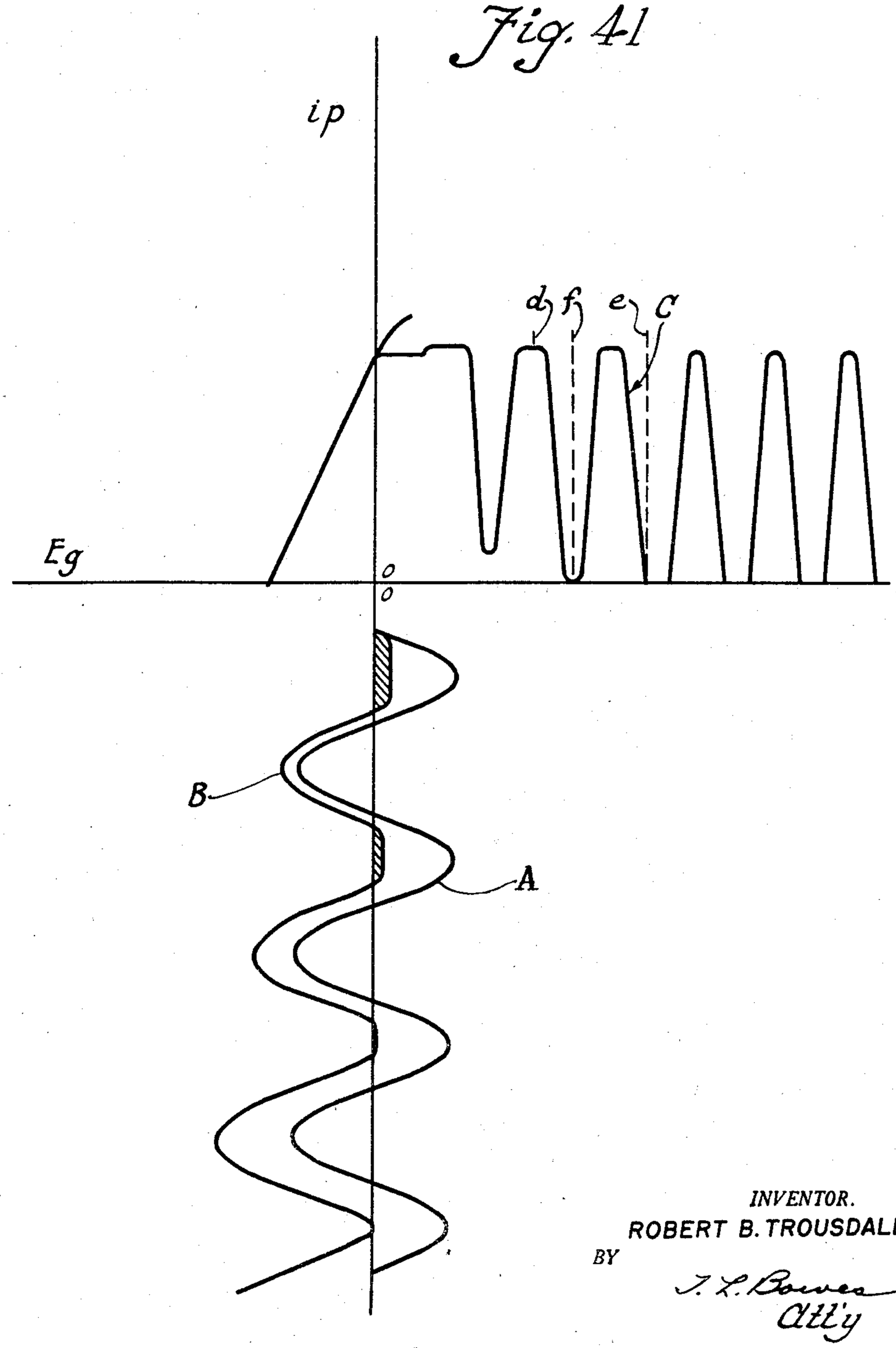

INVENTOR.
ROBERT B. TROUSDALE
BY
J. L. Bowen
Att'y

Fig. 42

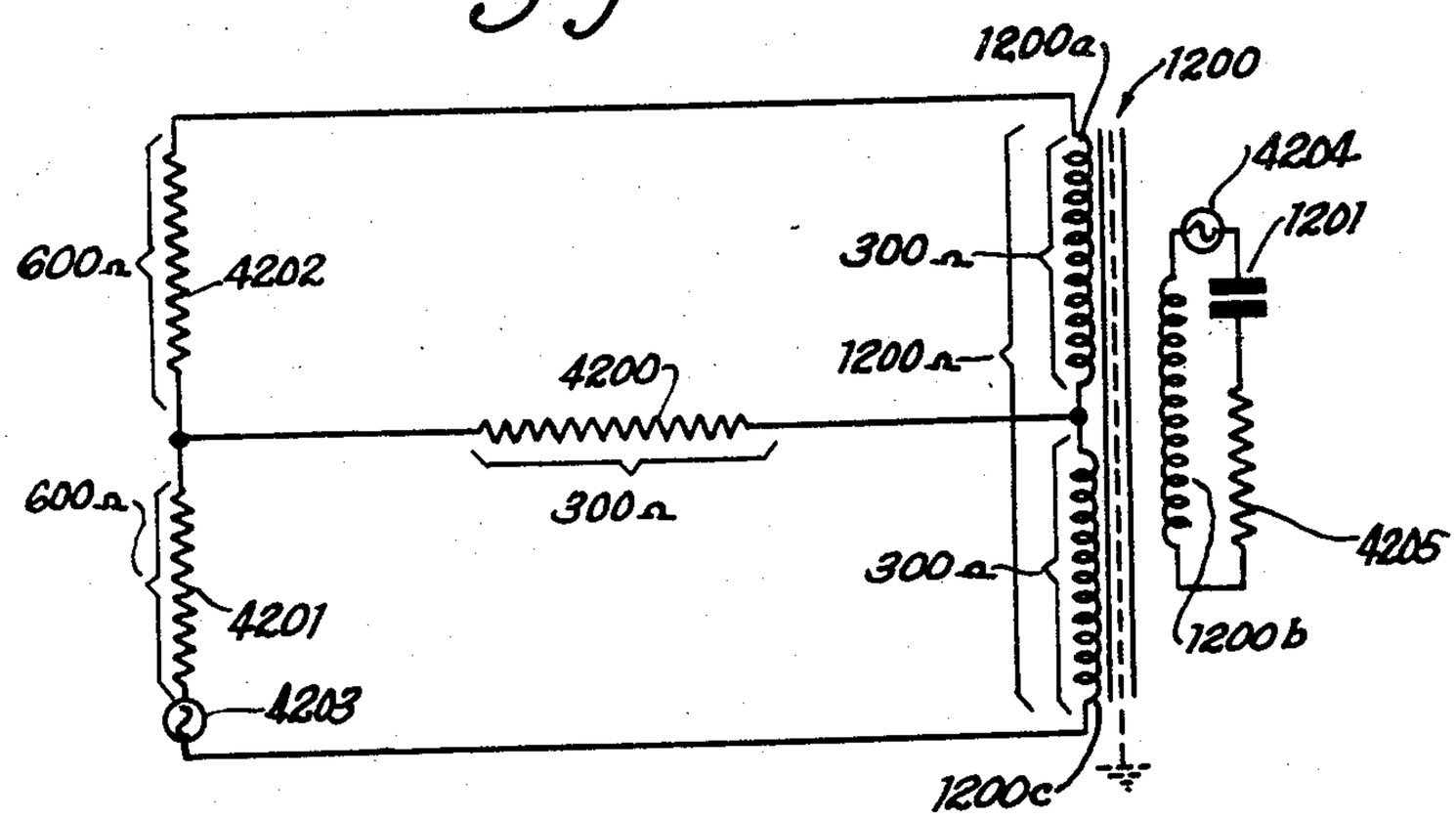

Fig. 43

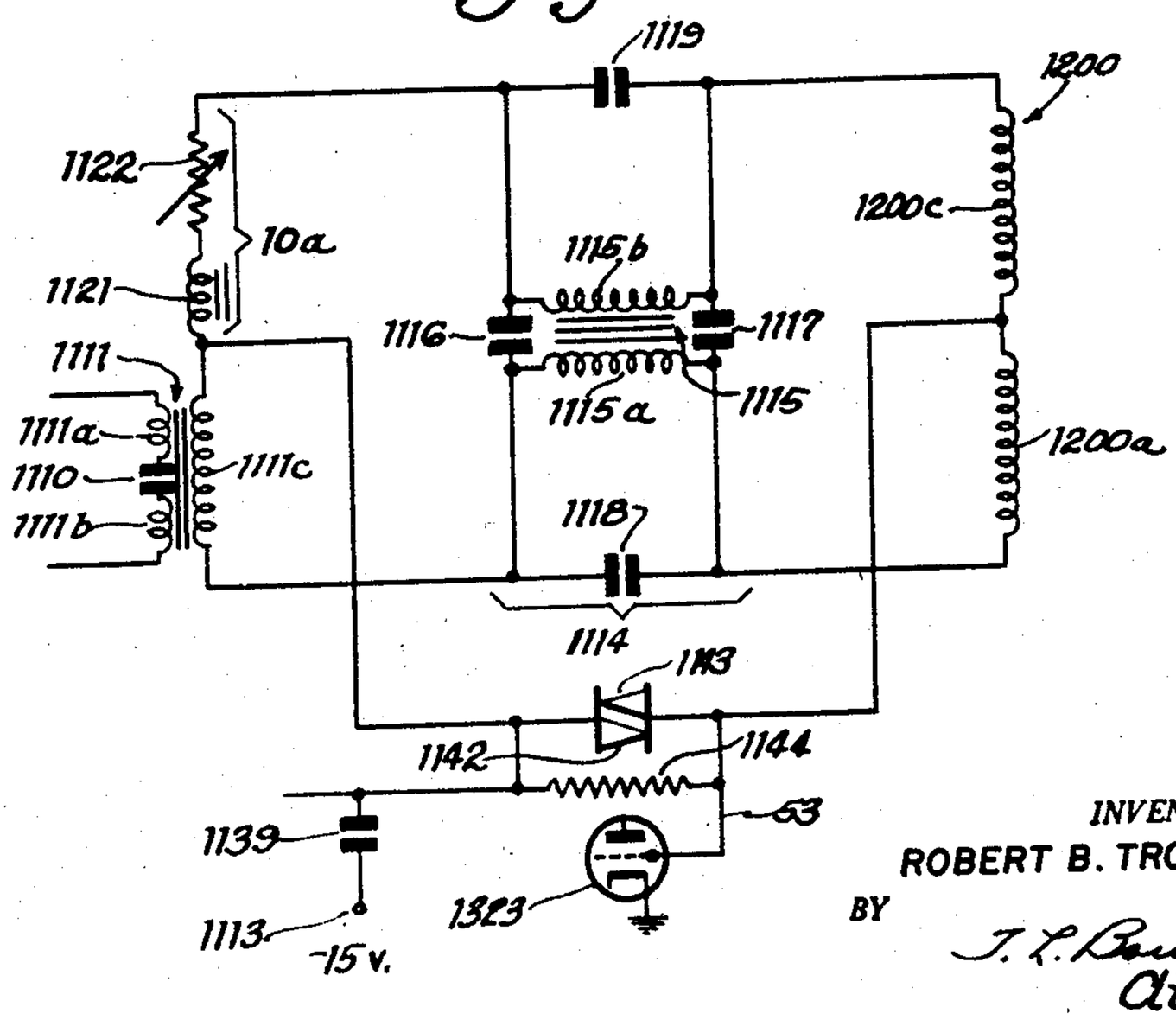

INVENTOR.
ROBERT B. TROUSDALE
BY
T. L. Power
Att'y

Fig. 44

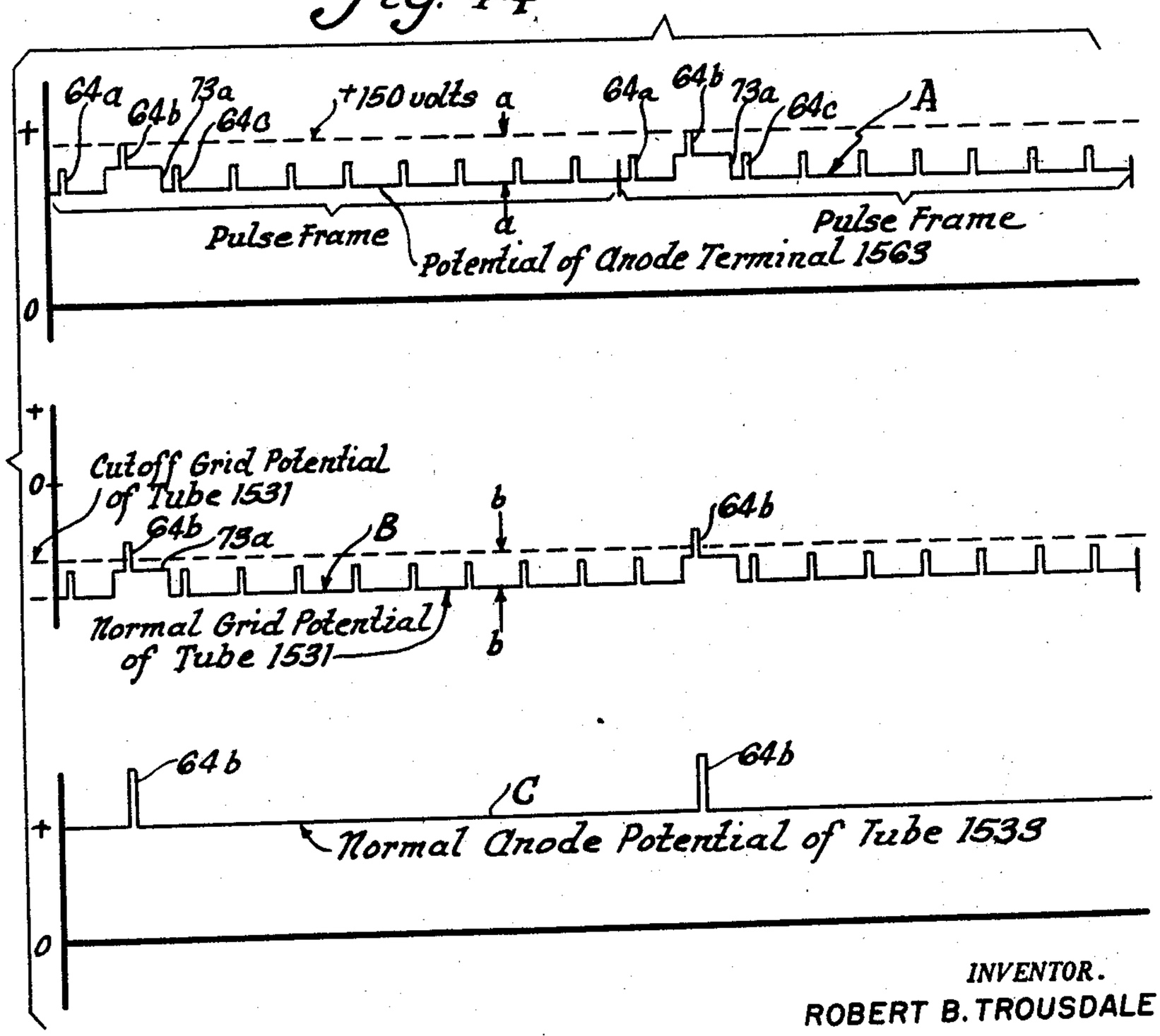

INVENTOR.
ROBERT B. TROUSDALE
BY
T. L. Bowen
Att'y

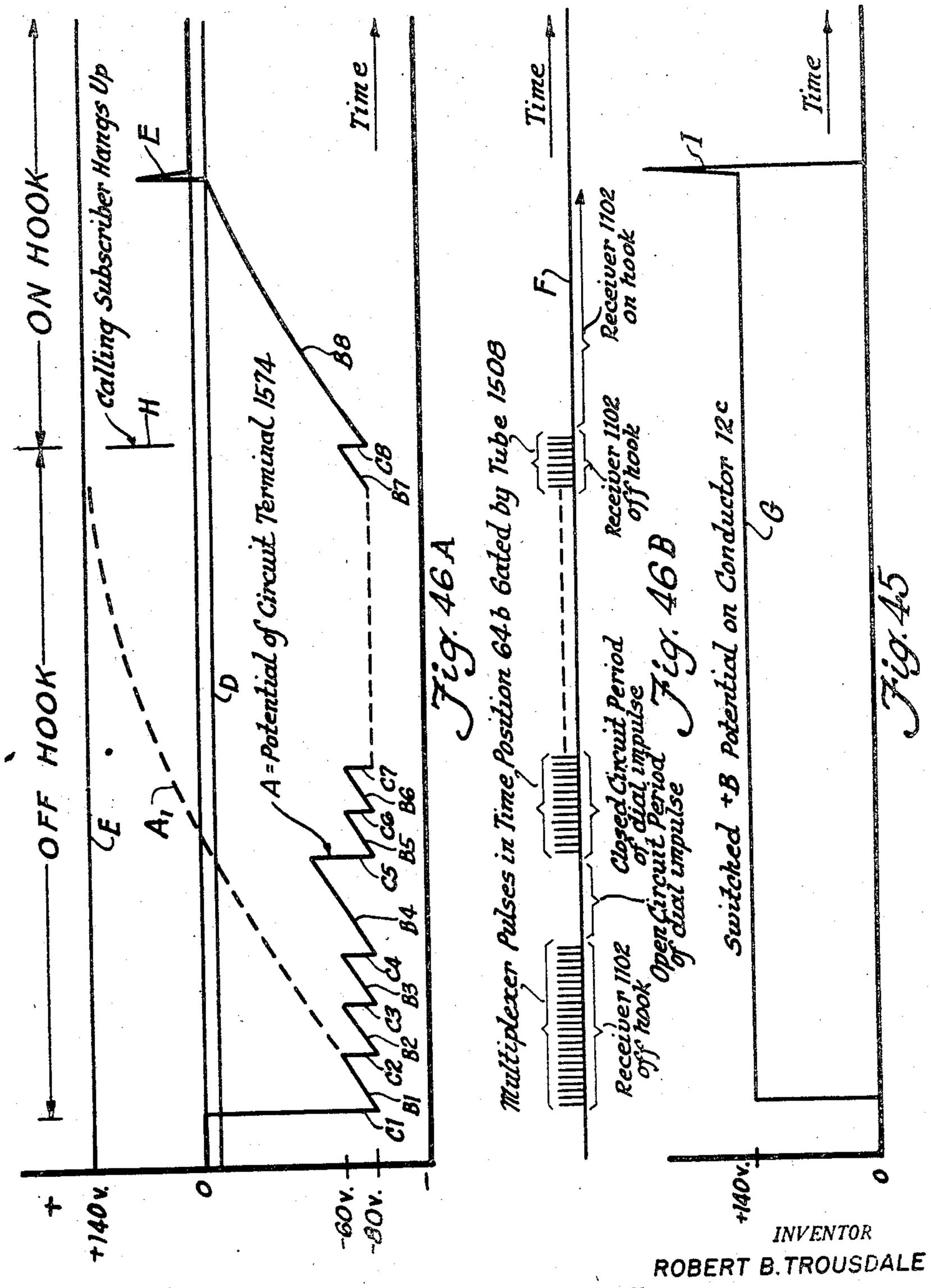

INVENTOR
ROBERT B. TROUSDALE
BY
J. L. Bowen
Atty.

Fig. 47

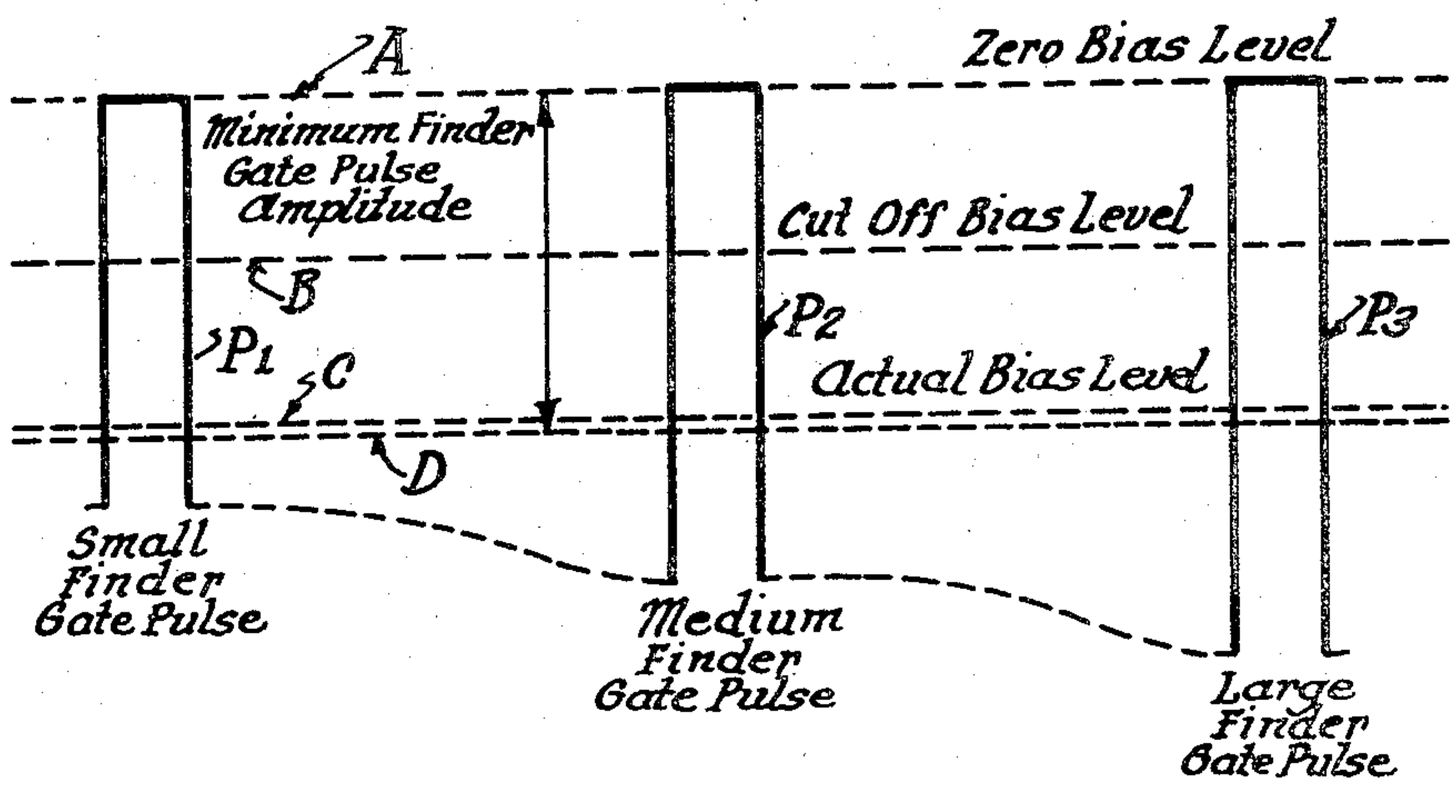

Fig. 48

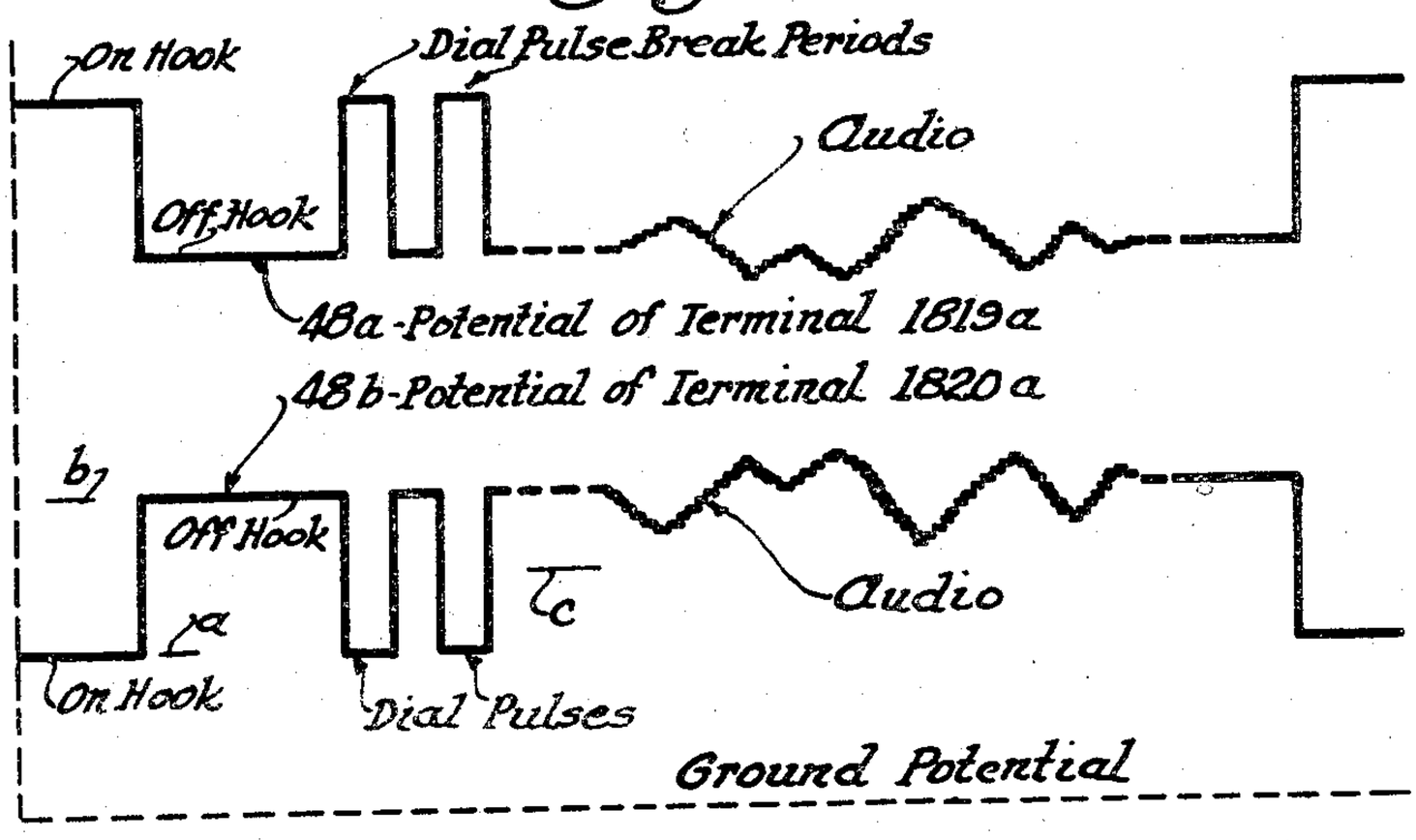

INVENTOR.
ROBERT B. TROUSDALE
BY
T. L. Bowen
Att'y

Fig. 49

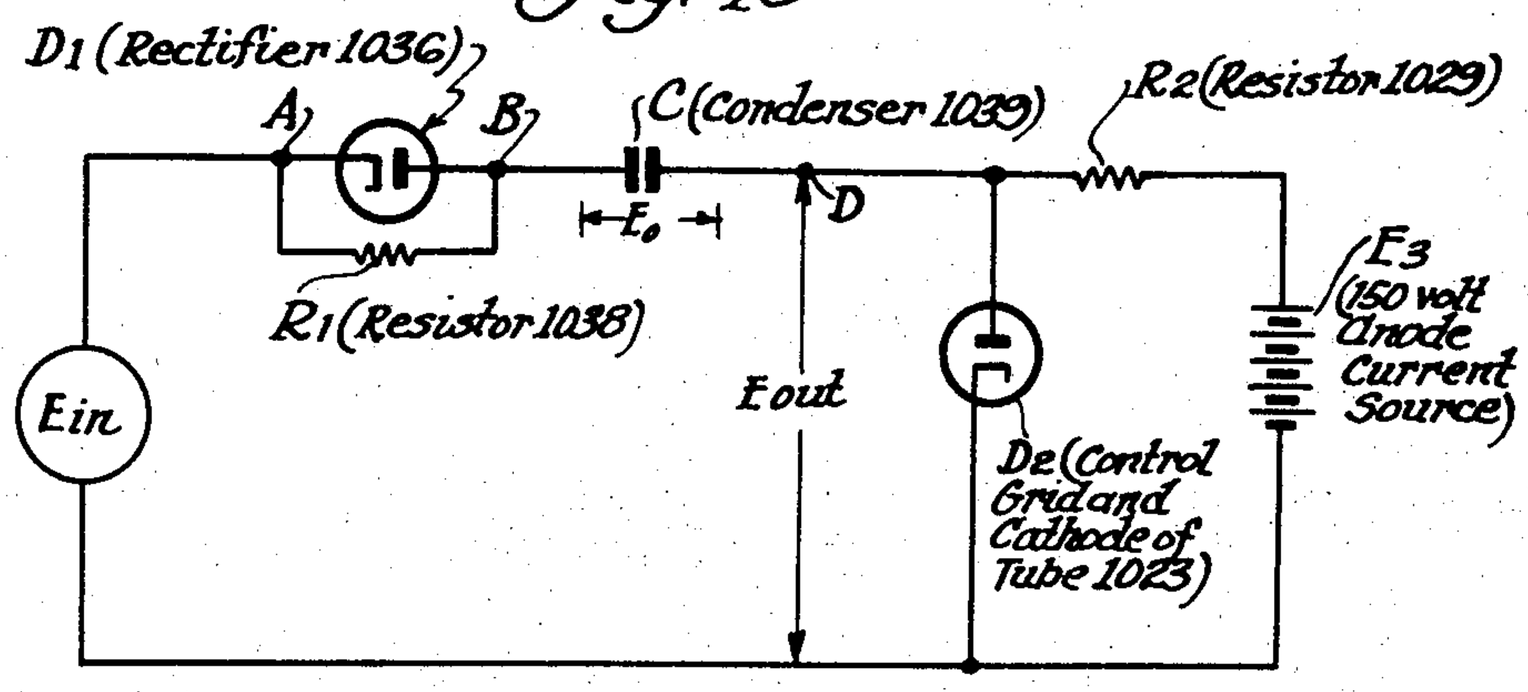

Fig. 50

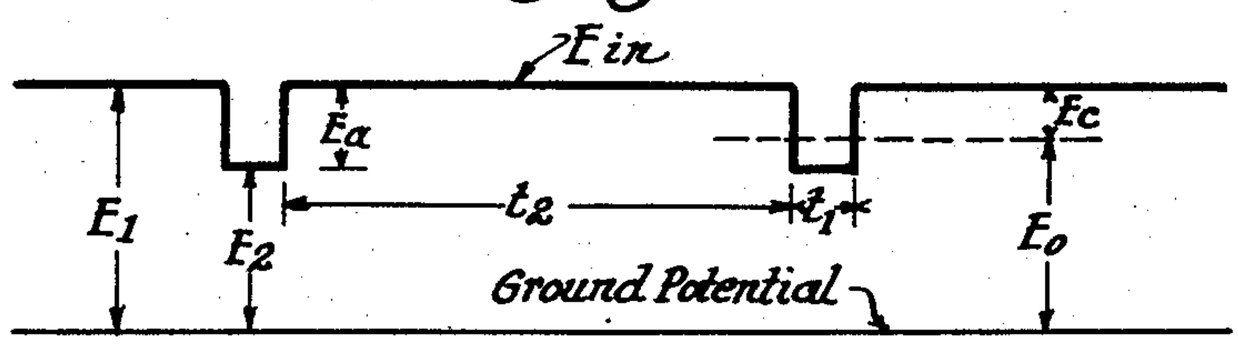

Fig. 51

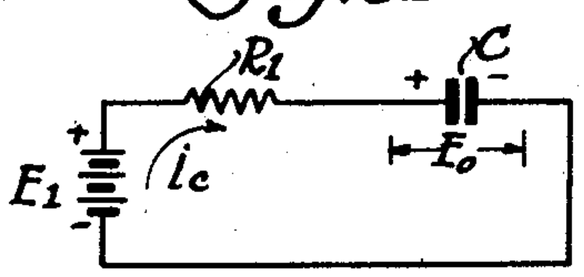

Fig. 52

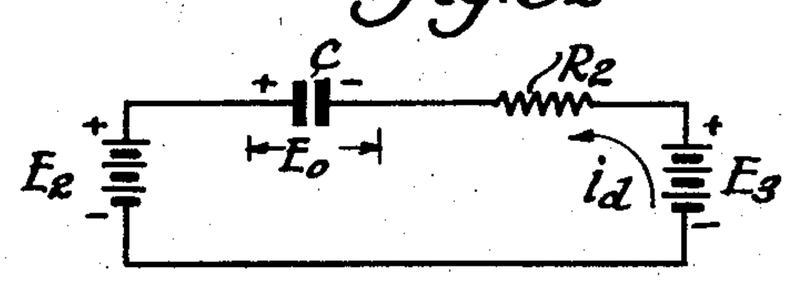

Fig. 53

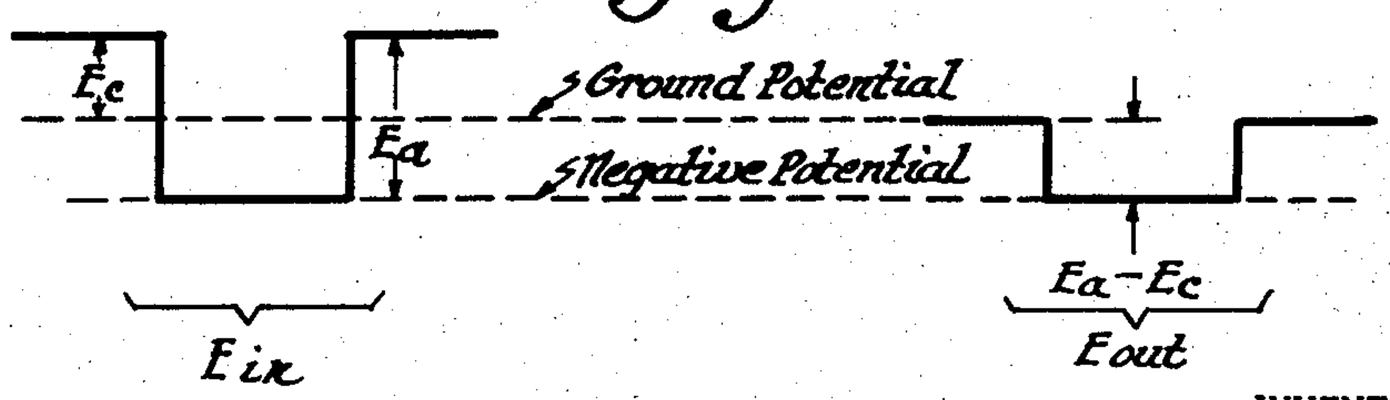

INVENTOR.
ROBERT B. TROUSDALE
BY
T. L. Bowen
Atty

United States Patent Office

2,934,606

Patented Apr. 26, 1960

2,934,606

SELECTOR CIRCUIT

Robert B. Trousdale, Long Beach, Calif., assignor to Stromberg-Carlson Company, a corporation of New York

Original application September 21, 1950, Serial No. 186,046, now Patent No. 2,774,071, dated December 11, 1956. Divided and this application October 8, 1956, Serial No. 614,634

53 Claims. (Cl. 179—18)

The present invention relates to improved methods and apparatus for selectively setting up signal transmission connections between the lines of a signaling system and more particularly to improved methods and apparatus for setting up private two-way communication connections between the lines of an automatic telephone system. This application is a division of copending application Serial No. 186,046, filed September 21, 1950, now Patent No. 2,774,071, granted Dec. 11, 1956.

Many types of automatic switching apparatus have been proposed and developed for transmitting signals between the lines of telephone, telegraph and other communication systems. In the main, the apparatus proposed and developed for this purpose utilizes electromechanical devices embodying moving mechanical parts, such, for example, as relays, stepping switches and the like, to perform the line selecting, line interconnecting and ancillary functions required in selectively interconnecting any two lines of a large group of lines. While apparatus of this type and embodying switching devices of various forms has been developed to provide thoroughly reliable service, it is inherently subject to several limitations, including that of insufficient operating speed. To overcome these limitations various proposals have been made for utilizing electronic facilities, such, for example, as cathode ray tubes, for the purpose of transmitting signals between the lines of a signaling system on a selective basis. However, most if not all of these proposals are limited to arrangements for providing one-way signal transmission between two lines and include no provisions whatever for performing the ancillary control and supervisory functions, such, for example, as line busying, called line selection, called line busy testing and called station ringing, which are required in interconnecting the lines of an automatic telephone system.

It is an object of the present invention, therefore, to provide new and improved methods and apparatus for selectively setting up two-way connections between any pair of lines of a signaling system.

It is another object of the present invention to provide an improved automatic telephone system capable of providing all of the services of electromechanical switch type systems, but which consists exclusively of electron discharge tubes and interconnecting circuit components.

It is a further object of the invention to provide an improved electronic line selector which is fully automatic in operation and embodies improved methods and apparatus for controlling the transmission of signals in both directions and on a private basis between different pairs of connected lines of the system.

It is still another object of the invention to provide an improved electronic telephone system of the fully automatic type which includes numerical switching stages each comprising electronic facilities directively controllable over any calling line of the system to select a desired called line of the system.

It is a still further object of the invention to provide

an improved impulse responsive line selector for use in an automatic telephone system of the character described.

More specifically, it is an object of the present invention to provide an improved impulse responsive line selector which is fully automatic in operation and which embodies electronic facilities for transmitting the usual start impulsing or dial tone signal over each calling line of the system when the line selector is operatively associated with the line, testing each called line to determine the idle or busy condition thereof incident to the selection thereof, returning a busy signal to the calling line if the called line tests busy, transmitting a ringing signal over the called line and a ring-back signal over the calling line if the called line tests idle, and terminating the ringing and ring-back signals in response to answering of the call on the called line.

It is another object of the present invention to provide a new and improved impulse responsive line selector which embodies electronic facilities directively controllable over any calling line of the system to select a desired called line of the system on a pulse multiplex basis.

The invention, both as to its organization and method of operation, together with further objects and advantages thereof, will best be understood by reference to the following specification taken in connection with the accompanying drawings, in which:

Figs. 1, 2, 3 and 4, when arranged in the manner shown in Fig. 5, diagrammatically illustrate an automatic telephone system characterized by the features of the present invention;

Figs. 2A and 2B when laid end to end in the order named diagrammatically illustrate the components of one of the finder-connector links embodied in the system shown in Figs. 1 to 4, inclusive;

Figs. 7 to 36, inclusive, when arranged in the manner shown in Fig. 6 illustrate the details of the system shown in Figs. 1 to 4, inclusive;

Figs. 37, 38, 39 and 40 when laid side by side in the order named graphically illustrate the time relationships between certain of the pulses developed by and utilized in the various components of the system; and

Figs. 41 to 53, inclusive, are graphs illustrating the operating characteristics of certain components of the system.

In general, the fundamentally new electronic telephone system herein disclosed is capable of serving one hundred lines. More specifically, the system is capable of providing selective and private two-way communication between any two lines of a one hundred line group and includes entirely novel facilities for performing the functions of:

(1) Individual finder-connector link assignment to each calling line, coupled with automatic link busying as each link is taken into use to handle a call.

(2) Dial tone transmission to the calling substation when a finder-connector link is assigned to the calling line.

(3) Dial controlled impulsing (two digits) to effect selection, on a decimal basis, of any called line in the one hundred line group.

(4) Automatic dial tone cut-off in response to initiation of the dialing operation.

(5) Busy testing the called line incident to the selection thereof and the transmission of a busy tone signal to the calling substation in the event the called line tests busy.

(6) Intermittent ringing of the called substation in the event the called line tests idle and the transmission of a ringback tone signal to the calling substation as the ringing operation proceeds.

(7) Automatic ring cut-off and ringback tone signal cut-off when the called subscriber answers.

(8) Guarding each calling line against intrusion as a result of an incoming call thereto in response to assignment of a finder-connector link to the calling line and guarding of a called line against intrusion as a result of a subsequently initiated call thereto after it has been selected as a called line.

(9) Automatic release of the link occupied with a call incident to release of the connection at the calling substation.

All of the above functions are accomplished on a fully automatic basis without the use of any relays, stepping switches or other equivalent mechanical devices having moving parts. With the exception of the line circuits all equipment provided in the system to perform the described functions is common to all lines of the system, thus minimizing duplication of system components.

Basically the present improved system utilizes a system of multiplexing, namely pulsed sampling effectively at an ultrasonic rate of the control and intelligence signals produced at each substation of the system, to provide signal channel separation. Specifically, each line or substation of the system is assigned a particular pulse time position in each of repetitive pulse frames each comprising one hundred pulse time positions. Intelligence and control signals developed at any one substation of the system are sampled only in the particular pulse time position assigned to the particular substation and the samples are carried through the signal transmitting components of the system as far as the connector stage on multiplexer signal pulses occurring in this particular time position. In the connector stage the control or intelligence signals carried by the multiplexer signal pulses are detected and either used for control purposes, such as called line selection, or are superimposed on connector signal pulses occurring in a new and different pulse time position of successive pulse frames for redistribution to the particular line and substation assigned the new time position. The same process is employed in transmitting intelligence from the called substation back to the calling substation.

In order to minimize the amount of equipment used in certain components of the system, a decimal system of multiplexing is employed which entails arbitrary division of the lines of the system into subgroups. More specifically, the one hundred lines of the system are divided into ten subgroups of ten lines each, and tens multiplexing or gating pulses are developed at the rate of ten pulses for each pulse frame. Each tens pulse individually corresponds to a particular subgroup of ten lines and occurs during the time interval of each pulse frame which exactly spans the ten pulse time positions individually assigned to the lines of the particular subgroup. With this system of multiplexing, transmission of multiplexer signal pulses through certain of the signal transmission components of the system is dependent upon time coincidence of these signal pulses with particular tens pulses of successive pulse frames as well as coincidence of these pulses with particular pulse time positions within successive pulse frames.

GENERAL DESCRIPTION OF THE SYSTEM

Referring now to the drawings and more particularly to Figs. 1, 2, 3 and 4 thereof, the present fully automatic electronic telephone system is there illustrated as comprising line circuits **10**, **16**, etc., individual to the one hundred lines of the system, a multiplexer **11** of which only one is required in the system, a plurality of identical finder-connector links **12**, **13** and **14**, a distributor **15** of which only one is required in the system, and the common equipment indicated generally at **17** in Fig. 4 of the drawings. Each of the finder-connector links is comprised of a finder and a connector, the illustrated links respectively comprising finders **12***a*, **13***a* and **14***a* and connectors **12***b*, **13***b* and **14***b*. It will be understood that the number of finder-connector links employed in the system may be chosen as required to handle the traffic. Although only three links **12**, **13** and **14** have been illustrated, from seven to ten links will normally be required in actual practice to handle the traffic of a one hundred line exchange. Inclusion of the additional links in the system may easily be accomplished by connecting appropriate terminals of additional links to the indicated multiple points. Actually, only tweny-seven multiple connections and one individual connection are required in order to add one finder-connector link to the system. This is in contrast with conventional step-by-step and all-relay type systems wherein more than six hundred multiple connections are normally required to put a single added link into service.

As shown, the line circuits **10** and **16** respectively terminate two two-conductor lines which are respectively identified by their directory number designations **23** and **32** and extend to the substations A and B, respectively. Each line circuit performs the functions of repeating intelligence or control signals from its associated substation to a corresponding one of the gate circuits in the multiplexer **11**, repeating intelligence signals derived from a particular gate circuit of the distributor **15** to its associated substation, and of responding to ring start signals derived from one of the connectors **12***b*, **13***b* or **14***b* by way of the distributor **15** to transmit ringing current to the associated substation on a call incoming thereto. To perform these functions, the line circuit **10** is connected by way of a conductor **53** to one of the gate circuits provided in the multiplexer **11**, and is connected by way of the conductors **44***a* and **44***b* forming the illustrated cable **44** to one of the gate circuits provided in the distributor **16**. The line circuit **10** is also connected to certain components of the common equipment **17** in the manner described below. Similarly, the line circuit **16** is connected by way of the conductors **54***a* and **54***b* to one of the gate circuits in the distrbutor **15** and by way of the conductor **45** to one of the gate circuits in the multiplexer **11**. This line circuit is also connected to certain components of the common equipment **17** in the manner pointed out below. The other ninety-eight line circuits of the system are likewise connected on an individual basis to corresponding gate circuits of the multiplexer **11** and distributor **15** and on a common basis to certain components of the common equipment **17**.

Generally speaking, the multiplexer **11** performs the functions of sampling the intelligence and control signals derived from the one hundred line circuits of the system only in the pulse time positions of each pulse frame individually assigned to the lines served by these line circuits, and of modulating the sampled intelligence or control signals on the multiplexer signal pulses occurring in these pulse time positions for transmission to the finders and connectors of the plurality of links **12**, **13** and **14**. To this end, the output terminals of the multiplexer **11** are connected by way of the common conductor **50** to the multiplexer input terminals of each of the finders **12***a*, **13***a* and **14***a* and also to the multiplexer input terminals of each of the connectors **12***b*, **13***b* and **14***b*. In reverse manner, the distributor **15** performs the function of repeating intelligence and control signals derived from the connectors **12***b*, **13***b* and **14***b* in pulse time positions corresponding to particular calling and called lines to the line circuits respectively terminating the lines. To this end, the input terminals of the distributor are connected by way of the common conductor **51** to the output terminals of each of the connectors **12***b*, **13***b* and **14***b*. In performing the described functions, the multiplexer **11** and the distributor **15** are controlled by certain components of the common equipment **17** in the manner hereinafter explained.

The finders of the various links, such, for example, as the finder **12***a*, do not perform any intelligence transmission functions. On the contrary, they function strictly as control units. Specifically, the finder **12***a* is provided to

perform the function of determining when the link **12** shall be taken into use, determining the calling line with which the link is to be associated in handling a call, and determining the particular pulse time position of successive pulse frames which is assigned to the calling line and during which signal bearing pulses derived from the multiplexer **11** shall be effective to produce a response in the finder and in the associated connector **12***b*. To advise the connector of the pulse time position assigned to the calling line, the finder **12***a* transmits finder gate pulses to the connector in this pulse time position over the conductor **12***d*. The finder **12***a* also performs the function of conditioning its associated connector **12***b* for operation when the link **12** is definitely associated with a calling line to handle the call initiated on the line. This is accomplished through operation of the finder **12***a* to impress operating anode potentials upon a plurality of the tubes in the connector **12***b* over the +B switch conductor **12***c*. When operatively associated with a particular calling line, the finder **12***a* also performs the function of guarding the calling line against intrusion on an incoming call to the line. This is accomplished through operation of the finder **12***a* to feed busy pulses occurring in the particular pulse time position assigned to the calling line with which the finder is operatively associated to a common busy conductor **52** which is multipled to each of the finders and connectors of the system. To perform the above functions in the manner fully explained below, the finder **12***a* comprises (see Figs. 2A, 15 and 16) a pulse input circuit **200**, a +B switching circuit **201**, a pulse combining circuit **202**, tens and units coincidence tube circuits **203** and **204**, and a finder pulse forming circuit **205**. It will be noted that the finder **12***a* and connector **12***b* are connected on an individual link basis by only two conductors, namely the +B switch conductor **12***c* and the finder gate pulse conductor **12***d*. The finder **13***a* and connector **13***b* of the link **13** are similarly connected on an individual link basis by means of the finder gate and +B switch conductors **13***d* and **13***c* which respectively correspond to the conductors **12***d* and **12***c* of the link **12**. Similarly, the finder gate and +B switch conductors **14***d* and **14***c* are provided to connect the finder **14***a* and connector **14***b* of the link **14**.

Each of the connectors **12***b*, **13***b* and **14***b* performs a plurality of different functions. Thus the connector **12***b*, for example, is controlled by finder gate pulses delivered thereto over the conductor **12***d* to accept and respond to signal bearing multiplexer pulses occurring in the pulse time position coresponding to the calling line with which the link is associated. It also responds to the application of operating anode potential to the conductor **12***c* and to the finder gate pulses appearing on the conductor **12***d* to feed a dial tone signal to the distributor **15** on connector signal pulses occurring in the pulse time position assigned to the calling line with which it is operatively associated, thereby to return the usual dial tone signal to the calling subscriber. This connector **12***b* also responds to dial pulses (two digits) originating at the calling line with which the link **12** is operatively associated to select the particular pulse time position assigned to the called line. Incident to the selection of this time position, the connector **12***b* conditions itself to accept signal carrying pulses from the multiplexer **11** which occur in the pulse time position corresponding to the selected called line, to store the intelligence carried by these pulses, and to retransmit the intelligence to the distributor **15** on connector signal pulses occurring in the pulse time position corresponding to the calling line with which the link **12** is operatively associated. In effect, therefore, the connector functions to shift signal carrying pulses from the pulse time position assigned to the calling line to the pulse time position assigned to the called line, and also to shift return signal pulses carrying intelligence derived from the called line from the particular pulse time position assigned to the called line to the particular pulse time position corresponding to the calling line. In addition, the connector **12***b* performs the auxiilary functions of terminating dial tone transmission to the calling substation when the first line selecting impulse is dialed into the connector; feeding busy pulses to the busy conductor **52** in the pulse time position assigned to the called line, thereby to guard the called line against seizure through another link; testing the pulse time position assigned to the called line to determine the idle or busy condition of that line; transmitting busy tone carrying pulses to the distributor **15** in the pulse time position assigned to the calling line in the event the called line tests busy; transmitting a ring start signal by way of the distributor **15** to the line circuit terminating the called line in the event the called line tests idle, concurrently transmitting ring-back tone modulated pulses to the distributor **15** in the pulse time position assigned to the calling line, thereby to signal the calling subscriber that the called substation is being rung; and terminating the ring start signal and concurrently terminating ring-back tone signal transmission to the calling substation in response to answering of the call at the called substation. The connector **12***b* is also arranged to release in response to the release of a connection involving the link **12** at the calling substation.

To perform the above-mentioned functions in the manner fully explained below, the connector **12***b*, as diagrammatically illustrated in Fig. 2B and as shown in detail in Figs. 9, 10, 11, 18, 19 and 20, is provided with a calling line in gate circuit **207** which responds to finder gate pulses transmitted to the connector over the conductor **12***d* to repeat signal bearing pulses delivered thereto from the multiplexer **11** in the pulse time position assigned to the calling line, and a calling line reconstructor circuit **208** having the function of detecting or reconstructing and storing the intelligence carried by the signal bearing pulses transmitted to the connector from the multiplexer **11** in the pulse time position assigned to the calling line. The connector **12***b* further comprises a called line out gate circuit **224** for gating to the distributor **15** connector signal pulses carrying the intelligence reconstructed by the circuit **208** in the time position assigned to a particular called line. In addition, the connector **12***b* includes a called line in gate circuit **223** for repeating multiplexer pulses in the pulse time position assigned to the called line which bear intelligence or control signals derived from the called line, a called line reconstructor circuit **222** for detecting or reconstructing the intelligence or control signals gated by the called line in gate circuit **223**, and a calling line out gate circuit **226** which is controlled in accordance with the detected intelligence stored in the circuit **222** and by the finder gate pulses delivered to the connector over the conductor **12***d* to gate the distributor **15** signal bearing connector pulses which occur in the pulse time position assigned to the calling line. More generally, the three circuit **207**, **208** and **224** function to repeat intelligence from the calling line to the called line, whereas the three corresponding circuits **223**, **222** and **226** function to repeat to the calling line intelligence derived from the called line.

The connector **12***b* additionally comprises a plurality of components for responding to two digits of dial pulses repeated to the connector on multiplexer pulses occurring in the pulse time position assigned to the calling line. In general, the dial pulse responsive equipment of the connector **12***b* comprises a dial impulse integrator circuit **209** which receives dial impulses from the reconstructor circuit **208**, a tens changeover gate circuit **210**, a units start gate circuit **213** to which pulses are repeated by the dial pulse integrator circuit **209**, tens and units digit registers **211** and **215** which are respectively controlled in accordance with the numerical values of the tens and units digits repeated to the circuits **210** and **213** from the integrator circuit **209**, a units changeover gate circuit **214** interposed between the start gate circuit **213** and the units digit register **215**, and tens and units sequence

timing circuits 212 and 216 which in effect function as the digit counting components of the connector, i.e., initiate certain operations at the ends of the first and second digits dialed into the connector. The connector further comprises a connector pulse forming circuit 217 which is controlled in accordance with the settings imparted to the tens and units digit registers 211 and 215 at the end of a dialing operation to produce the connector pulses which are employed to control the circuits 222, 223 and 224 in the transmission of intelligence and control signal information from the connector to the distributor 15 in the pulse time position assigned to the called line. The busy test facilities of the connector comprise a busy test circuit 218 jointly controlled by the connector pulse forming circuit 217 and busy pulses transmitted to the connector over the common busy lead 52, a busy lock circuit 219 and a busy gate circuit 220. In addition, the connector comprises supervisory tone gate circuits 225 having the function of gating dial, busy and ring-back tones to the calling line. Finally, the connector comprises a ring trip circuit 221 which is assigned the function of terminating ringing current transmission to a called substation when a call answering operation is performed at the substation.

Generally considered, the common equipment 17 comprises a master oscillator 18 designed to operate at a fixed radio frequency (preferably one megacycle) and having its output terminals connected to control a phase shifter and pulse former network 19. If desired or necessary, the master oscillator 18 may be common to a plurality of exchanges, in which case it is connected to feed its output signal to the several exchanges over coaxial cables. As controlled by the master oscillator 18, the phase shifter and pulse former network 19 function continuously to develop two identical trains of shaped pulses having a common pulse frequency of one megacycle, which are transmitted over the channels 40 and 41, respectively, to a units pulse ring circuit 20 and a commutator drive circuit 25. The phase relationship between the pulses respectively produced in the channels 40 and 41 by the network 19 may be shifted as desired through adjustment of certain of the components of this network in the manner more fully explained below. As controlled by the phase shifter and pulse former network 19, the units pulse ring circuit 20 functions sequentially to develop the units pulses which define the pulse time positions of the pulse frames, appear on the conductors within the cables 31 and 30, respectively, and are fed by way of these conductors to the various intelligence transmitting and control components of the system. More specifically, the cable 30 comprises ten units pulse conductors 30*a*, 30*b*–30*j* over which negative units pulses are sequentially transmitted in the order named to the units coincidence tube circuits 204 of the finders 12*a*, 13*a* and 14*a* and the units digits registers 215 of the connectors 12*b*, 13*b* and 14*b*. In time coincidence with the described negative units pulses, the ring circuit 20 produces positive units pulses on the ten units pulse conductors 31*a*, 31*b*–31*j* forming the cable 31, which are transmitted to the units gate circuits of the distributor 15 and also to the pulse gate circuits of a channel pulse commutator 22. The positive units pulses developed upon the two conductors 31*a* and 31*f* are also employed to control a bias and ringing carrier supply circuit 26. The positive and negative units pulses are sequentially developed on the units leads 31 and 30, respectively at a frequency rate of 100 kilocycles and each tenth positive units pulse, i.e., each pulse appearing on the units pulse conductor 31*j*, is used to step or trigger a tens pulse ring circuit 21 having the function of developing the positive and negative tens pulses, each of which spans the time interval of ten units pulses. The positive tens pulses as sequentially produced by the ring circuit 21 on the tens pulse conductors 32*a*, 32*b*–32*j* forming the cable 32 are impressed upon the tens pulse gate circuits of the multiplexer 11 and the tens pulse gate circuits of the distributor 15 in the manner more fully explained below. The negative tens pulses as produced by the ring circuit 21 in time coincidence with the positive tens pulses and as sequentially impressed on the tens pulse conductors 33*a*, 33*b*–33*j* forming the cable 33 are impressed on the tens coincidence tube circuits 203 of the finders 12*a*, 12*b* and 12*c* and the tens digit registers 211 embodied in the connectors 12*b*, 13*b* and 14*b*, all in the manner more fully explained below. As controlled by the positive units pulses derived from the units pulse ring circuit 20 and the commutator drive pulses derived from the commutator drive circuit 25, the channel pulse commutator 22 functions successively to develop very narrow channel pulses on the channel pulse conductors 34*a*, 34*b*–34*j* forming the cable 34, which are fed to the units pulse gate circuits of the multiplexer 11. These channel pulses occur at the same frequency as the units pulses, but are much narrower in width. For example, the channel pulses appearing on the conductor 34*a* are much narrower than the units pulses appearing on the positive units pulse lead 31*a* and are preferably so phased relative to the units pulses that each channel pulse occurs well within the limits of the coincident positive units pulse. Commutator drive pulses as derived from the commutator drive circuit 25 are also transmitted directly over a commutator drive pulse conductor 35 to the out gate circuits 224 and 226 of each of the connectors 12*b*, 13*b* and 14*b*.

The common equipment 17 further comprises a link allotter 24 having the function of developing link allotting pulses of relatively long duration (preferably each pulse persists for at least one millisecond) successively on the link allotting conductors 36*a*, 36*b* and 36*c*. These conductors individually extend to the pulse combining circuits 202 of the finders 12*a*, 13*a* and 14*a* and the pulses impressed thereon perform the function of rendering the respective corresponding links available for use providing the links are not already occupied with calls.

As indicated above, the line circuits 10, 16, etc., individually terminating the lines of the system, perform the function of transmitting ringing current to their respective associated substations. Keyed ringing current transmission from any line circuit terminating a called idle line is effected at a predetermined slow rate of the order of one second on and four seconds off, under the control of the bias and ringing carrier supply circuit 26 and a keying circuit 27 which are embodied in the common equipment 17 and are connected to each of the line circuits 10, 16, etc., over common multiple conductors 37 and 38. The common equipment also includes dial tone and busy tone sources which are collectively indicated at 29 in Fig. 4 of the drawings and are respectively connected by way of the multiple conductors 46 and 47 to the supervisory tone gate circuits 225 of each of the connectors 12*b*, 13*b* and 14*b*. The common equipment further comprises a ring-back tone generator 29*c*, the output signal of which is keyed by the ringing keying circuit 27 and supplied to the supervisory tone gate circuits 225 of each of the connectors 12*b*, 13*b* and 14*b* over a common multiple conductor 48. Finally, the common equipment includes a ringing supply circuit 60 which embodies a 20 cycle ringing current source and which is connected by way of two common multiple conductors 61*a* and 61*b* within the cable 61 to each of the line circuits of the system.

In order to render the mode of operation of the system more readily understandable, a pulse chart has been illustrated in Figs. 37 to 40, inclusive, to show the relative widths of the pulses developed by the common equipment components 19, 25, 20, 21 and 22 during two successive pulse frames, as well as the time or phase relationship between the pulses. As there shown, the units pulse ring drive pulses 95*a*, appearing on the conductor

40 are produced by the phase shifter and pulse former circuit 19 along the zero potential reference line 95 at a frequency rate of one megacycle and are of positive polarity. Similarly, the channel pulse commutator drive pulses 96*a* appearing on the conductors 41 and 35 are produced by the phase shifter and pulse former network 19 along the zero potential reference line 96 at the same frequency of one megacycle and are of positive polarity. It will be noted that both the units pulse ring drive pulses 95*a* and the commutator drive pulses 96*a* are very narrow, i.e., persist for very short time intervals, and that the pulses 96*a* are so displaced in time relative to the pulses 95*a* that each commutator drive pulse 96*a* occurs approximately at the middle of the period separating the preceding and succeeding units pulse ring drive pulses 95*a*. The positive units pulses appearing respectively on the units pulse conductors 31*b*, 31*c*–31*j* and the negative units pulses coincidentally appearing on the units pulse conductors 31*a*, 31*b*–31*j* are produced along the zero potential reference lines 62, 63–71. More specifically, the positive units pulses produced along these potential reference lines and appearing on the units pulse conductors 31 are shown in solid lines, whereas the coincident negative units pulses produced along the same reference lines and appearing on the units pulse conductors 30 are shown in dash lines. It will be noted that the units pulses are produced by the units pulse ring circuit 20 at the fundamental frequency rate of one megacycle. However, due to diversion of the pulses successively to different ones of the units pulse conductors *a*, *b*–*j*, the pulses along any particular zero potential reference line, such, for example, as the line 62, recur only at a frequency rate of one hundred kilocycles. It will also be noted that the units pulses, both positive and negative, are successively produced on the units pulse conductors 30 and 31 in the order of alphabetical designation of these conductors. Thus, successive positive and coincident negative units pulses produced along any particular zero potential reference line, as, for example, those occurring during the units pulse periods 62*a*, 62*b*, 62*c*, etc., along the potential reference line 62, are separated by a time interval equaling the sum of nine units pulse time positions and during which units pulses are produced successively along each of the nine other zero potential reference lines.

The negative tens pulses successively produced by the tens pulse ring circuit 21 on the tens pulse conductors 33*a*, 33*b*–33*j* and the positive tens pulses coincidentally produced on the tens pulse conductors 32*a*, 32*b*–32*j* are illustrated as appearing along the ten zero potential reference lines 72 to 81, inclusive. Here, also, the positive tens pulses are shown in solid lines, whereas the coincidentally produced negative tens pulses are shown in dash lines. It will be noted that each tens pulse persists for a time interval exactly equaling the time required to produce ten units pulses. Thus the positive and negative tens pulse 72*a* persists for the duration of the interval in which the ten units pulses 62*a*–71*a* are successively produced by the units pulse ring circuit 20. It will also be noted that the starting point of each tens pulse period 72*a*, 73*a*, 74*a*, etc., is exactly coincident with the starting points of the positive and negative units pulses 62*a*, 62*b*, 62*c*, etc., appearing along the zero potential reference line 62 and impressed upon the units pulse conductors 30*a* and 31*a*, respectively, by the units pulse ring circuit 20. Further, each tens pulse period terminates at the exact instant of termination of the positive and negative units pulses 71*a*, 71*b*, 71*c*, etc., appearing along the zero potential reference line 72 and produced by the units pulse ring circuit 20 on the conductors 30*j* and 31*j*, respectively. The described synchronism between the time positions of the tens pulses and the time positions of the units pulses successively produced on the units pulse conductors by the ring circuit 20 is obtained and maintained by employing the trailing edges of the positive units pulses appearing on the last positive units pulse conductor 31*j* to step or trigger the tens pulse ring 21 on a periodic basis.

The channel pulses which are successively produced on the ten channel pulse conductors 34*a*, 34*b*–34*j* by the channel pulse commutator 22 and are transmitted to the multiplexer 11 for signal bearing purposes in the manner indicated above, are of positive polarity, are produced along the zero potential reference lines 82 to 91, inclusive, and occur in time coincidence with the commutator drive pulses 96*a* appearing along the zero potential reference line 96. Like the positive and negative units pulses, the channel pulses are produced at the fundamental frequency rate of one megacycle, but due to the action of the commutator 22 in diverting these pulses successively to the conductors 34*a*, 34*b*–34*j* recur only on each of these conductors at a rate of one hundred kilocycles. Thus the channel pulses 82*a*, 82*b*, 82*c*, etc., appearing along the reference line 82 and impressed on the conductor 34*a* are spaced apart timewise by like intervals each of which exactly equals the sum of ten units pulse time periods. During this spacing interval, nine additional channel pulses are successively produced along the reference lines 83, 84–91 to appear on the conductors 34*b*, 34*c*–34*j*. It will also be noted that the channel pulses are very narrow in width, having a persistence interval of the order of one fifth the persistence interval of the units pulse time period. Moreover, each channel pulse occurs well within the limits and preferably within the first half of each units pulse. This is accomplished by utilizing the channel pulse commutator drive pulses developed on the conductor 35 and appearing along the zero potential reference line 96, which are displaced timewise relative to the units pulse ring drive pulses 95*a*, to open the gating circuits of the channel pulse commutator 22 in the manner more fully explained below. The purpose of thus positioning the signal bearing pulses in the units pulse time positions is that of insuring transmission of these pulses through the units gate circuits of the signal handling components of the system while these gate circuits are open despite slight variations in relative positions of the units pulses and the signal bearing pulses occasioned by circuit delays.

With the above general description of the pulse chart illustrated in Figs. 37 to 40, inclusive, in mind, it will readily be understood that each pulse frame is divided into one hundred readily identifiable pulse time positions. Thus the first ten pulse time positions of each pulse frame, which are respectively assigned to the lines of the system having the directory number designations 11, 12—10, are defined by the first tens pulse period 72*a* of the frame within which the ten units pulse periods 62*a*, 63*a*, 64*a*–71*a* occur. Similarly, the second ten pulse time positions, which are respectively assigned to the lines of the system having the directory number designations 21, 22, 23—20, are defined by the second tens pulse period 73*a* during which the ten units pulse periods 62*b*, 63*b*, 64*b*–71*b* occur. Again, the third ten pulse time positions, which are respectively assigned to the lines of the system having the directory number designations 31, 32, 33—30, are marked out by the third tens pulse time period 74*a* during which the ten units pulse periods 62*c*, 63*c*, 64*c*–71*c* occur. Thus it will be understood that the pulse time position of each pulse frame which is assigned to the illustrated line 23 occurs during the second tens pulse interval 73*a* of each pulse frame and is coincident with the units pulse period 64*b* of each pulse frame. It will also be apparent that the corresponding signal pulse 84*b* occurs well within the limits of this pulse time position. Similarly, the pulse time position 32 assigned to the illustrated line 32 occurs during the third tens pulse time interval 74*a* of each pulse frame and is coincident with the second units pulse period 63*c* of each pulse frame. Here again, each channel pulse 83*c* corresponding to the line 32 occurs well within the limits

of the particular pulse time position assigned to the line 32 in each pulse frame.

OPERATION OF THE SYSTEM AS A WHOLE

Briefly to consider the general mode of operation of the system, it may be assumed that the substation B is called from the substation A during a period when the finder-connector link 12 is idle and is allotted for use under the control of the link allotter 24. When the receiver or hand set at the substation A is lifted from its supporting hook or cradle to initiate the call, a loop circuit including the conductors of the line 23 is closed to the line circuit 10, with the result that this line circuit immediately operates to change the magnitude of the bias potential which it delivers over the conductor 53 to the units gating circuit of the multiplexer 11 which individually corresponds to the line 23. The multiplexer 11 responds to this change in magnitude of the controlling bias potential supplied thereto from the line circuit 10 by opening the units gate corresponding to the line 23 to permit the ten pulses 84*a*, 84*b*, 84*c*, etc., to pass through this gate. The tens gate circuit controlled by the tens pulse 73*a* corresponding to the ten line subgroup including the line 23, is, however, only opened in coincidence with the signal pulse 84*b* during each pulse frame. Accordingly, only the signal pulses 84*b* occurring during the pulse time positions 64*b* of successive pulse frames, are permitted to pass over the common conductor 50 to the pulse input circuits 200 of the finders 12*a*, 13*a* and 14*a* and the in gate circuits 207 and 223 of the connectors 12*b*, 13*b* and 14*b* in parallel. At this point the pulses transmitted from the multiplexer 11 over the common conductor in the pulse time position 64*b* may be regarded as multiplexer pulses 84*b*. Since only the link 12 is conditioned by the allotter 24 and the combining circuit 202 of the finder 12*a* to handle the call, and the connector 12*b* of this link is as yet inoperative, only the finder 12*a* initially responds to the multiplexer pulses 84*b* delivered thereto from the multiplexer 11 over the conductor 50 in the described pulse time position 64*b*.

In the finder 12*a* the multiplexer pulses 84*b* are repeated by the pulse input circuit 200 to effect substantially immediate operation of the +B switching circuit 201 embodied in this finder, whereby operating anode potentials are delivered to the tubes of the circuits 209, 211, 212, 213, 214, 215, 216, 218, 219, 223, 224 and 225 of the connector 12*b* over the +B switch conductor 12*c*, with the result that the connector 12*b* is conditioned for operation, i.e., conditioned to respond to signal carrying multiplexer pulses delivered thereto from the multiplexer 11 over the conductor 50. Operation of the +B switching circuit in the finder 12*a* also has the effect of conditioning the tens and units coincidence tube circuits 203 and 204 of this finder for operation under the joint control of the multiplexer pulses 84*b* repeated by the input circuit 200, the negative tens pulses developed by the tens pulse ring circuit 21 and the negative units pulses developed by the units pulse ring circuit 20. In responding to the tens and units pulses impressed thereon coincidentally with the multiplexer pulses 84*b*, the tens and units coincidence tube circuits 203 and 204 of the finder 12*a* cooperate with the finder pulse forming circuit 205 and the combining circuit 202 of this finder to produce finder gating pulses which are transmitted over the conductor 12*d* to the circuits 207, 208 and 226 of the connector 12*b* and have the effect of initially limiting the response of the connector only to multiplexer pulses 84*b* appearing in the pulse time position 64*b*. The combining circuit 202 of the finder 12*a* also gates busy pulses in the pulse time position 64*b* which are fed over the common busy lead 52 to each of the other finders and connectors of the system to prevent these finders from responding to multiplexer pulses occurring in this time position. Thus the line 23 is guarded against intrusion on an incoming call. In addition, the pulses gated by the circuit 202 to the conductor 12*d* are impressed upon the pulse input circuit 200, thereby to render the finder 12*a* responsive only to multiplexer pulses 84*b* appearing in the pulse time position 64*b*. Finally, the busy pulses developed in the time position 64*b* render the finder 12*a* non-responsive to link allotter pulses impressed upon the allotter conductor 36*a*, individual to the link 12, by the allotter 24. After the finder 12*a* has operated to perform the described functions, continued holding of the finder 12*a* is dependent upon continued acceptance and transmission of multiplexer pulses 84*b* by the pulse input circuit 200, which of course means that the finder will remain associated with the calling line 23 only so long as a calling condition persists on this line.

As indicated above, when the +B switching circuit 201 of the finder 12*a* operates to apply operating anode potential to the conductor 12*c*, the circuits 209, 211, 212, 213, 214, 215, 216, 218, 219, 223, 224 and 225 of the connector 12*b* are conditioned for operation. Immediately anode potential is applied to the dial tone gating tube of the network 225, this network functions to transmit a dial tone signal, derived from the dial tone generator 29*b* over the conductor 47, to the calling line out gate circuit 226 over the conductor 244. This circuit in responding to the dial tone signal and also to the finder gate pulses delivered thereto over the conductor 12*d* and the commutator drive pulses 96*a* delivered thereto over the conductor 35, functions to repeat over the channel conductor 51 to the distributor 15 connector signal pulses modulated in accordance with the dial tone signal in the pulse time position 64*b* assigned to the calling line. The distributor 15 responds to the connector signal pulses thus transmitted thereto by repeating the same through the tens and units gate circuits thereof over the conductor 44*a* to the line circuit 10. In the line circuit 10, the dial tone signal is detected and transmitted over the line 23 to signal the calling subscriber that the dialing operation may be initiated.

Two digits of dial impulses must be dialed into the connector 12*b* in order to effect selection in the connector of the pulse time position 63*c* assigned to the called line 32. More specifically, the directory number digits 3 and 2 must be dialed successively into the connector 12*b* to effect selection of the pulse time position 63*c*. During the open circuit period of each dial impulse, the control bias supplied by the line circuit 10 to that units gate circuit of the multiplexer 11 which corresponds to the calling line 23 is returned to its on hook value to interrupt the transmission of multiplexer pulses 84*b* over the conductor 50 to the pulse input circuit 200 of the finder 12*a* and to the in gate circuit 223 and 207 of the connector 12*b*. At this point, it is noted that the +B switching circuit has a fundamentally new time delay feature incorporated therein which prevents this circuit from removing operating anode potential from the conductor 12*c* during the open circuit periods of dial impulses, hook switch flashing and the like. Thus premature release of the link 12 during dialing is positively prevented through the action of the +B switching circuit 201 to maintain operating anode potential upon the conductor 12*c* during the open circuit period of each dial impulse. With the +B switching circuit 201 operating to supply anode potentials to the tubes of the coincidence tube circuits 203 and 204 of the finder 12*a*, finder gating pulses continue to be transmitted over the conductor 12*d* to the circuits 207, 208 and 226 of the connector 12*b*. Thus these circuits are held in condition to respond to intelligence and control signals delivered thereto from the multiplexer 11 on multiplexer pulses 84*b* impressed upon the conductor 50 in the pulse time position 64*b*.

During the make period of each impulse dialed at the calling substation multiplexer signal pulse transmission from the multiplexer 11 to the finder 12*a* and the con-

nector 12*b* in the pulse time position 64*b* is resumed. As controlled by the finder gating pulses delivered to the circuits 207 and 208 from the circuit 202 over the conductor 12*d*, the circuits 207 and 208 function to repeat any intelligence or control signals derived from the calling line 23 to the dial impulse integrator circuit 209. This circuit differentiates between intelligence modulated multiplexer pulses and dial impulse modulated multiplexer pulses in such manner that only the latter appear at the output terminals of this circuit. More specifically, during each dial impulse generated at the calling substation A, the impulse integrator circuit 209 develops coincident impulses which are impressed upon the tens changeover gate circuit 210 and the units start gate circuit 213 over the conductors 227 and 228, respectively. Pending operation of the tens sequence timing circuit 212, the units start gate circuit 213 is held nonresponsive to the three impulses transmitted thereto by the dial impulse integrator circuit 209 during dialing of the first digit 3 at the calling substation. However, the tens changeover gate circuit functions to repeat the three impulses over the conductors 230 and 231 respectively to the tens digit register circuit 211 and the tens sequence timing circuit 212. In responding to the three impulses thus transmitted thereto, the tens digit register 211 is driven to a setting wherein tens pulses appearing on the negative tens pulse conductor 33*c* in the third tens pulse time position 74*a* of each pulse frame may be transmitted through the third tens gate of this register and over conductor 232, to the connector pulse forming circuit 217. Transmission of the three impulses individually corresponding to the three break periods of the first digit dialed at the calling substation over the conductor 231 to the tens sequence timing circuit 212 has the effect of conditioning this circuit to block the tens changeover gate circuit from repeating impulses to the tens digit register 211 during dialing of the second digit and to render the units start gate circuit 213 operative to repeat the pulses delivered thereto by the dial impulse integrator circuit 209 during dialing of the second digit at the calling substation. Immediately the first dial impulse is repeated to the tens digit register 211 to drive this register off normal, a control potential is developed on the conductor 233 which biases the dial tone gate tube of the network 225 beyond cutoff, such that dial tone transmission through this gate tube to the calling line out gate circuit 226 over the conductor 244 is terminated. Thus, transmission of the dial tone signal to the calling substation A is arrested.

During the interdigit pause which separates dialing of the first and second digits at the calling substation, the tens sequence timing circuit 212 assumes a stable operating condition wherein a controlling potential is impressed upon the conductor 234 to bias the tens changeover gate circuit 210 against repeating further impulses transmitted thereto from the dial impulse integrator circuit 209. In assuming this condition, the tens sequence timing circuit 212 also changes the potential level on the conductor 235 to render the units start gate circuit operative to repeat impulses delivered thereto from the dial impulse integrator circuit 209 to the units changeover gate circuit 214 over the conductor 238.

During dialing of the second digit 2 at the calling substation A, the dial impulse integrator circuit 209 responds by transmitting two impulses to each of the gate circuits 210 and 213. As noted above, however, the changeover gate circuit 210 is now blocked against repeating these impulses. The units start gate circuit 213 repeats the two impulses to the units changeover gate circuit 214 over the conductor 238 and the latter circuit repeats the impulses over the conductors 236 and 237, respectively, to the units digit register 215 and the units sequence timing circuit 216. As a consequence, the units digit register is operated or driven to open the second units gate circuit therein, thereby to establish a path for the transmission of units pulses appearing in the time positions 63*a*, 63*b*, 63*c*, etc., to the connector pulse forming circuit 217. The two pulses repeated to the units sequence timing circuit 216 over the conductor 237 serve to condition this circuit for operation at the end of the second digit.

At the end of the second digit dialed into the connector 12*b* the units sequence timing circuit 216 operates to change the potential level on the conductor 241 to a value such that the units changeover gate circuit 214 is blocked against further pulse transmission therethrough. Concurrently, a potential is applied to the conductor 242 in the units sequence timing circuit 216 which has the effect of rendering the busy test circuit 218 operative to determine the idle or busy condition of the called line by testing the pulse time position 63*c* assigned to this line.

The potential applied to the conductor 242 also has the effect of rendering the connector pulse former circuit 217 operative to mix the tens and units pulses respectively transmitted thereto from the registers 211 and 215 over the conductors 232 and 245 to produce a resultant connector pulse which appears on the conductor 239. More specifically, the tens pulses 74*a* appearing on the negative tens pulse conductor 33*c* and gated by the tens digit register 211 are transmitted to the connector pulse former circuit 217 over the conductor 232 where they are mixed with the negative units pulses appearing in the time position 63*c* which are gated by the units register 215 and transmitted to the circuit 217 over the conductor 245. Mixing of these pulses in the circuit 217 results in the production of a resultant connector pulse which occurs during each pulse frame in the pulse time position 63*c* assigned to the called line. These pulses are transmitted over the conductor 239 to the connector components 218, 220, 222, 223 and 224.

Effectively, the busy test circuit 218 and the busy lock circuit 219 cooperate to perform the busy test operation in the connector 12*b*. More specifically, if the called line 32 is busy, i.e., occupied with a call, busy pulses are present on the common busy conductor 52 in the pulse time position 63*c* assigned to the called line. The manner in which such busy pulses are applied to the conductor 52 in another link occupied with the call involving the line 32 will be apparent from the foregoing explanation. These busy pulses are impressed upon the busy test circuit 218 coincidentally with the connector pulses developed by the connector pulse forming circuit 217 and impressed upon the busy test circuit 218 over the conductor 239. Coincidence between the connector pulses and the busy pulses has the effect of preventing the busy test circuit from operating. Thus the busy condition of the called line is indicated.

In the event the called line is busy, the busy lock circuit 219 as controlled over the conductors 242 and 246 and through the resistor 247 from the units sequence timing circuit 216 measures a predetermined time interval, i.e., a busy test interval, following which it operates to feed a bias potential back over the conductor 248 which has the effect of positively blocking the busy test circuit 218 against subsequent operation. In operating, the busy lock circuit 219 also controls the busy tone gate of the network 225 over the conductor 250 to permit the usual busy tone signal to be repeated from the busy tone source by way of the conductor 46, the busy gate circuit in the network 225, the calling line out gate circuit 226, the channel conductor 51, the distributor 15 and the line circuit 10 to the calling line. Thus the calling subscriber is advised of the busy condition of the called line.

Assuming that the called line 32 is idle at the time the pulse time position 63*c* assigned thereto is selected in the connector in the manner explained above, such busy pulses as may be present on the common busy lead 52 do not occur coincidentally with the connector pulses generated by the connector pulse forming circuit 217 in the

pulse time position 63c assigned to the called line. When coincidence between the connector pulses and the busy pulses is lacking, the busy test circuit operates immediately the first connector pulse is impressed thereon from the connector pulse forming circuit 217 over the conductor 239. In operating, the circuit 218 impresses a positive potential upon the cut-through conductor 251 which is applied to the busy lock circuit 219 to prevent the latter circuit from operating at the end of the busy test interval. The positive potential applied to the cut-through conductor 251 in the busy test circuit 218 when this circuit operates is also applied to the called line out gate circuit 224 to condition the latter circuit to repeat connector signal pulses in the time position 63c to the distributor 15, and is applied to the busy gate circuit 220 so that connector pulses are released to the busy conductor 52 and is also applied to the network 225 to act as an operating anode potential for the ring back tone gate tube of this network. The positive potential developed on the cut-through conductor 251 is also applied to the called line in-gate circuit 223 and the called line reconstructor circuit 222, thereby to condition these circuits to accept signals derived from the called line. This feature of making operation of the circuits 223 and 222 dependent upon operation of the busy test circuit to indicate that the called line is idle, is necessary in order to prevent the calling subscriber from listening in on a conversation being held over the called line when the called line is busy.

The positive potential applied to the cut-through conductor 251 is also impressed upon the ring trip circuit 221 and is applied through certain components of this circuit to the ring trip conductor 253 which extends to both the called line out gate circuit 224 and to the ring back tone gate circuit of the network 225. When this occurs, the ring back tone gate circuit of the network 225 is rendered operative to transmit the intermittent ring back tone signal derived from the keying circuit 27 over the conductor 43 to the calling line out gate circuit 226 over the conductor 244. The ring back tone signal is modulated on the signal pulses developed by the out gate circuit 226 and thus transmitted by way of the conductor 51 and the distributor 15 to the line circuit 10. In the line circuit 10, the ring back tone signal is detected and transmitted over the calling line 23 to the calling substation. Thus the calling subscriber is signaled that the called substation is being rung.

When the called line out gate circuit 224 is conditioned for operation through application of the described positive potential to the cut-through conductor 251, it responds to the connector pulses impressed upon the connector pulse conductor 239 by connector pulse forming circuit 217 by gating certain commutator drive pulses derived from the commutator drive circuit 25 over the conductor 35. More specifically, the commutator drive pulses transmitted over the conductor 35 by the commutator drive circuit 25 are gated by the connector pulses produced on the conductor 239 in the pulse time position 63c assigned to the called line, whereby very narrow connector signal pulses are released over the conductor 51 to the distributor 15 which are well within the limits of the pulse time position 63c assigned to the called line. So long as the positive potential applied to the cut-through conductor 251 in the busy test circuit 218 is fed through the ring trip circuit 221 to the ring trip conductor 253, the called line out gate circuit 224 is controlled to release connector signal pulses to the distributor 15 in the pulse time position 63c which are approximately fifty percent larger in amplitude than those used to convey intelligence signals to the distributor 15 after the call is answered at the called substation B. These large amplitude signal pulses are diverted by the distributor 15 to the line circuit 16 and serve to signal this line circuit that the ringing operation should start.

More specifically, the large amplitude connector signal pulses are released by the distributor 15 to the line circuit 16 over the conductor 54a. In this line circuit, these pulses have the effect of activating the ringing control facilities of the line circuit 16 with the result that ringing current keyed at a slow rate of approximately one second on and four seconds off is transmitted over the line 32 to energize the ringer provided at the called substation B. Ringing of the called substation persists until the call is answered or until the call is abandoned at the calling substation A. Assuming that the call is answered, the line circuit 16 functions to change the magnitude of the control potential supplied over the conductor 45 to the multiplexer 11 with the result that the gate assigned to the called line 32 in the multiplexer 11 is opened to permit multiplexer pulses 83c occurring in the pulse time position 63c of each pulse frame to be transmitted through the corresponding tens and units gate circuits of the multiplexer 11 and over the conductor 50 to the multiplexer input terminals of each of the finders and connectors of the system.

The multiplexer pulses 83c are impressed upon the calling and called line in gate circuits 207 and 223 in the connector 12b. In the calling line in gate circuit 207, the repeated multiplexer pulses 83c are not in coincidence with the finder gate pulses impressed upon the circuit 207 over the conductor 12d and hence are not repeated to the reconstructor circuit 208. However, in the called line in gate circuit 223 the multiplexer pulses 83c occur in time coincidence with the connector pulses impressed upon the circuit 223 over the connector pulse conductor 239 from the connector pulse former circuit 217. As a consequence, the call answering signal carried thereby is gated to the reconstructor circuit 222 where it is detected to produce a potential on the conductor 252 which has the effect of tripping the ring trip circuit 221. In operating, the ring trip circuit 221 functions substantially to decrease the positive potential on the ring trip conductor 253. The called line out gate circuit 224 responds to this reduction in potential on the conductor 253 by decreasing by approximately fifty percent the amplitude of the connector signal pulses transmitted over the conductor 51 and through the distributor 15 to the line circuit 16. The ringing control facilities of the line circuit 16 respond to this decrease in the amplitude of the connector signal pulses delivered thereto by terminating the transmission of ringing current to the called substation. Thus the ringing operation is arrested. The decrease in the positive potential present on the ring trip conductor 253 which occurs when the ring trip circuit 221 operates also has the effect of closing the ring back tone signal transmission gate of the network 225, with the result that transmission of the ring back tone signal to the calling substation is arrested.

Following the described operations in the connector 12b, a two-way talking or communication circuit is fully established between the calling substation A and the called substation B. Thus, voice or other signals developed at the substation A and transmitted over the line 23 to the line circuit 10 serve to vary the bias voltage impressed upon the gate circuit of the multiplexer 11 over the conductor 53 directly in accordance with the instantaneous amplitude of such signals. As a consequence, the multiplexer pulses 84b released by the multiplexer 11 over the conductor 50 to the finders and connectors of the system in the pulse time position 64b are modulated in accordance with the voice or other signals developed at the calling substation A. These signal modulated multiplexer pulses cannot be accepted by any finder of the system other than the finder 12a or any connector of the system other than the connector 12b because of the busy pulses fed to the busy conductor 52 from the circuit 205. In the finder 12a, the multiplexer pulses 84b maintain the +B switching circuit 201 operated to hold the link 12 associated with the line 23. The signal modulated multiplexer pulses 84b are also transmitted

through the calling line in gate circuit **207** and over the conductor **255** to the calling line reconstructor circuit **208** where they occur in time coincidence with the finder gating pulses impressed upon the reconstructor circuit over the conductor **12***d* in pulse time position **64***b*. As a consequence, the voice signal components thereof are detected or reconstructed and stored in the reconstructor circuit **208**. This stored signal information is impressed upon the called line out gate circuit **224** over the conductor **256**. In the called line out gate circuit, the signals derived from the calling line reconstructor circuit **208** are modulated upon the connector signal pulses developed by the out gate circuit **224** in the pulse time position **63***c* assigned to the called line. These modulated signal pulses are transmitted to the distributor **15** over the conductor **51** and released by the distributor **15** to the line circuit **16**. In the line circuit **16**, the signal components of the connector signal pulses are detected and transmitted over the line **32** to the called substation B where they are audibly reproduced by the receiver of the telephone instrument provided at the called substation.

Voice signals developed at the called substation B and transmitted over the line **32** to the line circuit **16** cause the bias potential delivered over the conductor **45** to the gate circuit of the multiplexer **11** which corresponds to the called line **32** to vary in exact accordance therewith. As a consequence, the voice signals are modulated upon the multiplexer pulses **83***c* occurring within the pulse time position **63***c* and released through the units and tens gates of the multiplexer and over the conductor **50** to the finders and connectors of the system. These signal modulated multiplexer pulses cannot be accepted by any finder of the system for the reason that the finder **12***a* is synchronized to accept only multiplexer pulses **84***b* occurring in the time position **64***b* and the busy pulses fed to the busy conductor **52** in the time position **64***b* assigned to the called line by the busy gate circuit **220** of the connector **12***b* prevent the other finders from accepting or responding to the described signal modulated multiplexer pulses **83***c*. In the connector **12***b*, the signal modulated multiplexer pulses **83***c* are impressed upon the calling and called line in gate circuits **207** and **223** and are repeated by the circuits **223** over the conductor **254** to the called line reconstructor circuit **222**. Due to lack of coincidence between the signal bearing multiplexer pulses **83***c* and the finder gating pulses impressed upon the calling line in gate circuit **207** over the conductor **12***d*, the circuit **207** does not gate these pulses to the reconstructor circuit **208**. By virtue of the coincidence between the signal bearing multiplexer pulses **83***c* and the connector pulses appearing coincidentally on the conductor **239**, both of which are impressed upon the called line reconstructor circuit **222**, this circuit detects or reconstructs and stores the voice signal components carried by the multiplexer pulses **83***c*. The signals thus detected by the reconstructor circuit **222** are impressed upon the calling line out gate circuit **226** over the conductor **257**. In the out gate circuit **226**, the voice signals modulate the pulses developed in this circuit through gating of the commutator drive pulses impressed on the circuit over the conductor **35** by the finder gating pulses impressed on the circuit over the conductor **12***d*. The voice signal modulated pulses developed in the calling line out gate circuit **226** are released by the distributor **15** in the pulse time position **64***b* and are diverted to the line circuit **10** through the gating circuit of the distributor which corresponds to the calling line. In the line circuit **10**, the signal components of the pulses released by the calling line out gate circuit **226** are detected and transmitted over the line **23** to the calling substation A where they are audibly reproduced by the receiver of the telephone instrument provided at this substation.

As will be apparent from the foregoing explanation, a fully complete two-way talking circuit is established between the calling and called substations. Moreover, this circuit effectively comprises two mutually non-interfering channels between the calling line **23** and the called line **32** such that voice signals simultaneously produced at both substations will be transmitted without interference through the switching equipment of the system to the appropriate destination point or substation. This non-interfering feature of the system primarily results from the assignment of two discrete and non-interfering pulse time positions in each pulse frame for the transmission of voice or intelligence modulated signals simultaneously through the switching equipment of the system in both directions. Secondarily, it results from physical separation of the intelligence gating circuits in the connector **12***b* into six discrete components. Thus the calling line in gate circuit **207**, the calling line reconstructor circuit **208** and the called line out gate circuit **224** are used only to repeat intelligence or voice signals from the calling line to the called line, whereas the called line in gate circuit **223**, the called line reconstructor circuit **222** and the calling line out gate circuit **226** are used only to repeat intelligence or voice signals from the called line to the calling line.

In describing the manner in which the system components **10**, **11**, **12***a*, **12***b*, **15** and **16** are partially or wholly released upon termination of the call, it may be assumed first that the called party at the substation B is the first to hang up. In such case, the bias potential delivered from the line circuit **16** over the conductor **45** to the gating circuit of the multiplexer **11** individually assigned to the called line **32** is restored to its normal value when the called line loop circuit is opened, with the result that multiplexer pulses **83***c* appearing in the pulse time position **63***c* are no longer transmitted over the conductor **50** to the finders and connectors of the system. Such termination of multiplexer pulse transmission in the time position **63***c* to the finders and connectors of the system has no effect other than inactivation of the connector components **223** and **222** and the removal of modulation components from the connector signal pulses transmitted by way of circuit **226** and the distributor **15** to the line circuit **10**. In other words, busy pulses in the time position **63***c* assigned to the called line continue to be fed to the busy conductor **52** from the busy gate circuit **220** of the connector **12***b*, thereby to prevent the called line **32** from originating a call or accepting an incoming call. This of course means that if the called subscriber picks up his receiver or hand set before the connection is released at the calling substation A, conversation may be resumed between the calling and called subscribers.

When the calling subscriber disconnects by replacing the receiver or hand set at the substation A on its supporting hook or cradle, the loop circuit extending by way of the line **23** to the line circuit **10** is opened, with the result that the bias potential applied over the conductor **53** to that gate circuit of the multiplexer **11** which individually corresponds to the calling line **23** is restored to its normal value. As a consequence, this gate circuit is biased to terminate the transmission of multiplexer pulses **84***b* occurring in the pulse time position **64***b* over the conductor **50** to the various finders and connectors of the system. When the transmission of multiplexer pulses **84***b* to the pulse input circuit **200** of the finder **12***a* is thus terminated, this circuit is rendered inactive to repeat pulses to the finder circuits **201**, **203** and **204**. After a predetermined time interval, measured by the overall time constant of the +B switching circuit **201**, this circuit responds to cessation of multiplexer pulse transmission thereto by removing the operating anode potential from the conductor **12***c*. As a consequence, the tens and units coincidence tube circuits **203** and **204** of the finder **12***a* are restored to normal to interrupt the production of finder gate and busy pulses in the pulse time position **64***b* by the finder pulse forming circuit **205**. Thus, the application of pulses to the combining circuit **202** and hence

to the busy conductor **52** in the pulse time position **64***b* assigned to the calling line **23** is arrested. Termination of pulse transmission to the combining circuit **202** in the time position **64***b* has the effect of rendering this circuit operative under the control of the link allotter **24** to reassociate the link **12** with another calling line to handle another call. Cessation of busy pulse transmission to the conductor **52** in the pulse time position **64***b* has the effect of marking the calling line **23** as idle to permit initiation of a second call on this line or seizure of the line on a call incoming thereto.

Removal of operating anode potential from the conductor **12***c* also has the effect of restoring the component circuits **209**, **211**, **212**, **213**, **214**, **215**, **216**, **218**, **219**, **223**, **224** and **225** of the connector **12***b* to normal, thereby to condition the connector **12***b* to handle another call. Incident to normalizing of the connector pulse forming circuit **217**, connector pulse production on the conductor **239** in the pulse time position **63***c* assigned to the called line **32** is terminated to arrest the application of busy pulses to the common busy conductor **52** by the busy gate circuit **220** in this pulse time position. Thus the called line is unguarded to free the same for use in initiating another call or accepting a call incoming thereto. It will be noted that normalizing of the identified circuits of the connector **12***b* has the effect of restoring all components of this connector to the condition which prevailed at the time the link **12** was taken into use to handle the call just described.

As will be evident from the immediately preceding explanation, the key component involved in effecting release of the link **12** is the +B switching circuit **201** embodied in the finder **12***a*. So long as multiplexer pulses are repeated to this circuit by the pulse input circuit **200** in the time position assigned to the calling line, the circuit positively prevents release of the link **12** and holds both the calling and called lines out of service, i.e., prevents use of the same in initiating outgoing calls or accepting incoming calls. However, when multiplexer pulse transmission by way of the pulse input circuit **200** to the +B switching circuit **201** is arrested for a period of time greater than approximately one fourth of a second, this switching circuit immediately effects release of the link regardless of the extent of progress of the call and regardless of whether or not the connection has been released at the called substation. Thus, normalizing of the +B switching circuit **201** will effect release of the link **12** upon abandonment of the call which the link is assigned to handle at any point in the process of setting up the desired connection, as for example, call abandonment before dialing is started, call abandonment after dialing is partially completed or call abandonment after dialing is completed and before the call is answered at the called substation. It will also be apparent that if the calling subscriber is the first to release the connection, i.e., hang up, the link **12** is immediately released under the control of the +B switching circuit **201** embodied in the finder **12***a*. In such case, the line circuit **16** associated with the called line **32** immediately assumes a setting indicating that the line **32** is calling, with the result that a link is assigned to the called line under the control of the allotter **24** and the usual dial tone signal is returned to the called subscriber. This signal has the effect of indicating to the called subscriber that the connection has been released at the calling substation and that he should hang up.

DETAILED DESCRIPTION OF THE SYSTEM

In considering the detailed circuitry of the system components briefly described above, operation of these components will be analyzed in so far as possible in terms of functions which they perform in establishing the above-described connection between the lines **23** and **32** in response to the call initiated at the substation A. Before considering the details of the system components, however, it is pointed out generally that corresponding reference characters have been used throughout the drawings to identify corresponding circuit elements of the system. It is also pointed out that all pulse carrying conductors, such, for example, as the signal pulse transmission conductors **50** and **51** are in the form of coaxial cables or transmission lines having low pulse attenuating properties at the pulse frequencies employed. In certain instances, the coaxial cables provided to connect two or more components of the system have been illustrated, but it should also be remembered that all of the other illustrated pulse carrying conductors are of the proper type. On the other hand, all illustrated conductors which function as direct current potential or audio signal carrying conductors are in the form of open or shielded wire.

Throughout the following detailed description of the system, the tube types employed are specifically identified. Moreover, those tubes of the system which are of the gas filled or thyratron type are so identified in the drawings through the use of a small dot within the tube envelope circle and opposite the tube cathode to indicate the gas content of the tube. Thus, each of the tens coincidence tubes **1610**, **1620**, **1630**—**1600** of the tens coincidence tube circuit **203** in the finder **12***a* are of the gas filled type and dots disposed opposite the respective cathodes of these tubes have been illustrated to indicate this fact. It is also pointed out that unless necessary to an understanding of the operation of a particular system component, those circuit elements which perform entirely conventional functions in the circuits, namely functions which will be readily understood by those skilled in the art, have not been identified in the drawings or referred to in the following description of the system components.

As used in this specification, the terms electronic and electronic means refer to an are intended to define means comprising electron conductive devices such, for example, as electron tubes, gas tubes, crystal rectifiers, semi-conductors and the like, together with interconnecting circuit components therefor, and to exclude all electromechanical devices embodying moving mechanical parts such, for example, as relays, stepping switches and the like.

Master oscillator 18

This circuit, as shown in Fig. 36 of the drawings, is substantially conventional and is designed to provide a stable output signal voltage of three volts at a frequency of one megacycle across the output terminals thereof. In general, the circuit comprises an oscillator section **3600** which includes an oscillator tube **3603** of the well known 6AK5 type, a driver section **3601** which includes a triode of the 6C4 type, and a cathode follower section **3602** which includes a twin triode tube of the well known 6J6 type. More specifically, the oscillator section **3600** of the circuit **18** is of the electron coupled type in which the screen electrode of the tube **3603** serves as the plate or anode of a triode oscillator and power is taken from a tuned output circuit coupled between the anode and cathode of the tube **3603**. It is provided with a frequency determining crystal **3607** having a resonant frequency of one megacycle which is connected between the input electrodes of the tube **3603** to determine the output frequency of the oscillator, and a tuned output circuit, consisting of an inductance **3610** paralleled by a tuning condenser **3609**, designed to have a resonant frequency of one megacycle. The output voltage developed by the oscillator network **3600** is impressed upon the input electrodes of the driver tube **3604** through a coupling condenser **3611**. The driver tube **3604** is connected to operate as a cathode follower, resistors **3613** and **3614** being provided in the cathode circuit of this tube across which the one megacycle signal voltage is developed. The direct current component of the voltage appearing across the resistor **3613** is applied through a resistor **3615** negatively to the control grid of the tube **3604** to establish the normal operating bias level for this tube. The signal voltage appearing across the serially related cath-

ode resistors **3613** and **3614** of the driver tube **3604** is impressed upon the parallel connected control grids of the cathode follower tube **3605** through a coupling condenser **3612**. As shown, the parallel connected cathodes of the tube **3605** are connected to ground through a load circuit which comprises a cathode resistor **3616**, a coaxial cable **3606** extending to the phase shift and pulse forming circuit **19** and a terminating resistor **3518** provided at the distant end of the cable **3606**. More specifically, the terminating resistor **3518** is connected between the central conductor of the coaxial cable **3606** and the grounded sheath of this cable.

As will be evident from the foregoing explanation, the output voltage developed across the output circuit **3608** during operation of the oscillator network **3600** is impressed upon the control grid of the driver tube **3604** through the coupling condenser **3611**. This signal voltage is repeated by the tube **3604** and appears across the cathode resistors **3613** and **3614** to be conducted to the control grids of the twin triode tube **3605** through the coupling condenser **3612**. In the cathode follower **3602**, the signal voltage is repeated by the tube **3605** and appears across the cathode load circuit of this tube, namely the resistors **3616** and **3518** and the coaxial cable **3606**. That portion of this voltage which is developed across the resistor **3518** is utilized as the driving voltage for the phase shift and pulse forming circuit **19**. This voltage has substantially a pure sine wave form and an amplitude of three volts. In the described operations, the driver section **3601** of the oscillator **18** functions to match the relatively high impedance of the oscillator output circuit **3608** with the relatively low input circuit impedance of the cathode follower **3602**, in addition to supplying a portion of the required attenuation of the oscillator output voltage.

Phase shift and pulse forming circuit 19

This circuit, as shown in Figs. 34 and 35 of the drawings, is provided to generate the extremely narrow pulses **95***a* and **96***a* which are used in sampling the intelligence and control signals in the manner generally explained above, and also for driving the units pulse ring circuit **20** and the commutator drive circuit **25**. It is arranged to operate from a sine wave signal source, namely the master oscillator **18**, which as previously explained, may be remote from the other equipment of the exchange, thus enabling the pulses developed by the phase shift and pulse forming circuits of several exchanges to be synchronized through the use of a single master oscillator **18** feeding these circuits from a convenient common point. The circuit **19** responds to the sine wave signal delivered thereto from the master oscillator **18** by developing two sets of output pulses on the output conductors **40** and **41** which may be phase shifted with respect to each other over a full 360 degree phase shift range. This permits exact centering of the signal sampling pulses within the limits of corresponding units pulses of longer duration in the manner generally explained above.

Briefly considered, the circuit **19** comprises an amplifier and phase inverter section **3500** which is common to two identical pulse forming channels **3400***a* and **3400***b*. These two pulse forming channels comprise identical circuit components interconnected in the same way. Accordingly, reference numerals, distinguished by the subscripts *a* and *b*, have been employed to identify corresponding components of the two channels. In detail, the amplifier and phase splitting section **3500** comprises a high gain pentode amplifier tube **3501** of the 6AK5 type having its input electrodes coupled to the output resistor **3518** of the master oscillator **18** through a coupling condenser **3521** and having its output electrodes coupled through a coupling condenser **3517** to the input electrodes of a phase splitting tube **3502** of the 6C4 type. The tube **3502** is provided with a cathode load resistor **3509** connected in series with a cathode bias resistor **3508** which is shunted by a by-pass condenser **3507**. The direct current component of the voltage developed across the resistor **3508** is negatively applied as a bias voltage to the control grid of the tube **3502** through a resistor **3522**. This tube is also provided with an anode load circuit which comprises two series connected resistors **3512** and **3513** having a combined resistance somewhat higher than the resistance of the cathode load resistor **3509**. A phase splitting circuit comprising a condenser **3511** and resistor **3510** connected in series between the anode of the tube **3502** and the top of the load resistor **3509** is provided to perform the phase splitting operation described more fully below. The phase splitting tube **3502** is coupled through coupling condensers **3519** and **3520**, respectively, to excite the input electrodes of two phase inverter tubes **3503***a* and **3503***b*. Each of the tubes **3503***a* and **3503***b* is of the twin triode 6J6 type having its anodes, control grids and cathodes connected in parallel. As shown, the tube **3503***a* is provided with a self-biasing network **3524***a*, a cathode load resistor **3525***a* and an anode load resistor **3526***a*. Similarly, the phase inverter tube **3503***b* is provided with a self-biasing circuit **3524***b*, a cathode load resistor **3525***b*, and an anode load resistor **3526***b*. Each of the two phase inverter tubes delivers two phase displaced input signals to each of the two pulse forming channels **3400***a* and **3400***b*.

Considering the pulse forming channel **3400***a* by way of example, this channel comprises a four phase condenser **3504***a* having four stator plates **3527***a*, **3528***a*, **3529***a* and **3530***a* which are physically displaced by 90 degrees and within which is rotatably mounted a specially shaped rotor **3531***a* capable of rotation through an angle of 360 degrees or more. The stator plates **3527***a* and **3528***a* are respectively connected to the top terminal **3534***a* of the cathode load resistor **3525***a* and the anode terminal **3533***a* of the tube **3503***a*, whereas the two remaining stator plates **3529***a* and **3530***a* are respectively connected to the anode terminal **3533***b* of the phase inverter tube **3503***b* and the top terminal **3534***b* of the cathode load resistor **3525***b*. The signal voltage developed between the rotor **3531***a* of the four-phase condenser **3504***a* and ground is impressed upon the input electrodes of a triode amplifier tube **3505***a* of the well known 6C4 type. This amplifier tube feeds its amplified signal output voltage through a coupling condenser **3532***a* to the input electrodes of a second high gain pentode amplifier tube **3506***a* of the well known 6AK5 type. The output circuit **3401***a* of the last-mentioned amplifier tube consists of inductance and capacitance elements which are shunt connected to form a tuned circuit resonant at the signal frequency of one megacycle. The voltage developed across this resonant circuit is impressed upon the input electrodes of a pulse forming tube **3402***a* through a coupling condenser **3407***a*. This tube is also of the commercial 6AK5 type and has its input electrodes shunted by a crystal rectifier **3406***a*. The output circuit of the pulse forming tube **3402***a* includes an inductance element **3408***a* which is self-resonant at a frequency approximately 2½ times the output frequency of the master oscillator **18**, i.e., at a frequency of approximately 2½ megacycles. This self-resonating inductance element is shunted by a crystal rectifier **3409***a*. The voltage developed across the shunt connected elements **3408***a* and **3409***a* is impressed upon the input electrodes of an inverter tube **3403***a* through a coupling condenser **3414***a*. This inverter tube is preferably in the form of a 6AK5 pentode and includes as one of its input electrodes a control grid which is connected to the +B terminal of the anode current supply source through a grid resistor **3410***a*. The signal voltage developed at the anode of the tube **3403***a* is fed through a coupling condenser **3411***a* to the control grids of two parallel connected cathode follower tubes **3404***a* and **3405***a* having a common cathode load resistor **3413***a*. These two cathode

follower tubes are of the twin triode 6J6 type having their anodes, control grids and cathodes respectively connected in parallel. The cathode load resistor **3413***a* of the two cathode follower tubes **3404***a* and **3405***a* functions as the output load impedance of the pulse forming channel **3400***a*. Accordingly, the commutator drive conductor **41** is connected to the cathode end of this load resistor.

In considering the operation of the phase shift and pulse forming circuit **19**, it will be understood that the one megacycle sine wave signal voltage developed across the output load resistor **3518** of the master oscillator **18** is impressed between the cathode and control grid of the amplifier tube **3501** through the coupling condenser **3521**. This voltage is amplified through the tube **3501** and impressed between the control grid and cathode of the phase splitting tube **3502** through the coupling condenser **3517**. The tube **3502** is characterized by a low mμ factor and performs the function of developing two sine wave voltages at the circuit terminals **3515** and **3523** which are displaced in phase by 90 degrees. More specifically, the signal voltage developed at the terminal **3514** of the anode circuit is displaced in phase by one hundred and eighty degrees relative to the signal voltage developed at the cathode resistor load terminal **3516**. These two voltages are of substantially equal amplitude and are fed to the phase splitting circuit consisting of the condenser **3511** and the resistor **3510**. As a result of the phase splitting action of these two series connected circuit elements, a resultant voltage is developed at the terminal **3515** and impressed upon the control grids of the inverter tube **3503***b* through the condenser **3520** which is phase displaced by 90 degrees relative to the signal voltage appearing at either of the two anode circuit terminals **3514** or **3523**. The phase inverter tube **3503***b* responds to the excitation voltage thus impressed upon its control grid by developing signal voltages of equal amplitude at its anode circuit terminal **3533***b* and cathode load resistor terminal **3534***b* which are phase displaced by 180 degrees. These voltages are respectively impressed upon the stator plates **3529***a* and **3530***a* of the four-phase condenser **3504***a*. Similarly, the signal voltages developed at the terminal points **3533***b* and **3534***b* of the phase inverter stage **3503***b* are respectively impressed upon the stator plates **3529***b* and **3530***b* of the four-phase condenser **3504***b*.

As indicated above, the signal voltage developed at the anode circuit terminal point **3523** of the phase splitting stage **3502** is phase displaced 90 degrees relative to the signal voltage developed at the circuit terminal **3515**. The voltage appearing at the terminal point **3523** is impressed upon the input electrodes of the second phase inverter tube **3503***a* through the coupling condenser **3519** to produce signal voltages at the anode terminal point **3533***a* and the cathode load resistor terminal **3534***a* which are of equal amplitude but are phase displaced by one hundred and eighty degrees. These signal voltages are respectively impressed upon the stator plates **3528***a* and **3527***a* of the four-phase condenser **3504***a* and upon the corresponding stator plates **3528***b* and **3527***b* of the second four-phase condenser **3504***b*.

From the preceding explanation, it will be understood that the three tubes **3502**, **3503***a* and **3503***b* in cooperation with the circuit elements interconnected therewith respond to the amplified one megacycle signal voltage delivered to the tube **3502** by producing four sine wave signal voltages of the same frequency and equal amplitude which are respectively displaced in phase by 90 degrees and which are respectively impressed upon the four stator plates of each of the four-phase condensers **3504***a* and **3504***b*. It is of importance to maintain amplitude equality between these signal voltages, and it is to this end that the combined plate or anode load resistance afforded by the resistors **3512** and **3513** in the anode circuit of the phase splitting tube **3502** is made substantially greater than the resistance of the cathode load resistor **3509**. In this connection, it is noted that since the input electrode biasing resistor **3508** of the tube **3502** is by-passed at the signal frequency by the condenser **3507**, is does not substantially affect the cathode load resistance of the tube **3502** at this frequency. The necessity for making the anode load resistance of the tube **3502** appreciably higher than the cathode load resistance of the tube is dictated by the fact that the cathode impedance of the tube is very low and is virtually unaffected by stray capacitance, whereas the plate impedance of the tube is relatively high and hence the magnitude of the signal voltages appearing at the circuit terminals **3514** and **3523** is very substantially affected by the shunting effect of stray capacitance. However, by employing a load resistance for the tube **3502** having a value appreciably higher than the resistance value of the cathode load resistor **3509**, this effect is overcome with the result that the voltages produced at the circuit terminals **3514** and **3516** are equalized. It has been found that entirely satisfactory results may be obtained by employing resistors **3512** and **3513** having resistance values of 2700 and 2400 ohms, respectively, and using a cathode load resistor **3509** having a resistance value of 3900 ohms. Resistance values higher than those just given cannot be employed satisfactorily since the use of higher value resistors has the effect of altering to an appreciable extent the desired one hundred and eighty degree phase relationship between the signal voltages developed at the circuit terminals **3514** and **3516**. Further to the end of obtaining amplitude equality between the signal voltages supplied to the four stator plates of each of the condensers **3504***a* and **3504***b*, the anode and cathode load resistors **3526***a* and **3525***a* of the tube **3503***a* are selected to have relatively low and unequal resistance values, such that the voltages appearing at the circuit terminals **3533***a* and **3534***a* are of equal amplitude. Similarly, the anode and cathode load resistors **3526***b* and **3525***b* of the inverter tube **3503***b* are selected to have unequal resistance values which insure amplitude equality of the signal voltages developed at the circuit terminals **3533***b* and **3534***b*. Specifically, the desired signal voltage equality at the output terminals of the two phase inverter tubes **3503***a* and **3503***b* may be obtained by using anode load resistors **3526***a* and **3526***b* each having a resistance value of 560 ohms and by using cathode load resistors **3525***a* and **3525***b* each having a resistance value of 470 ohms.

As indicated above, by virtue of the 90 degree phase relationship between the signal voltages delivered to the control grids of the two inverter tubes **3503***a* and **3503***b* and because of the one hundred and eighty degree phase relationship obtained between the two signal output voltages of each of these inverter tubes, the four stator plates of each of the four-phase condensers **3504***a* and **3504***b* are excited by one megacycle signal voltages of equal amplitude which are displaced in phase by 90 degrees. From this point on only the operations which occur in the pulse forming channel **3400***a* will be described, since those occurring in the second pulse forming channel **3400***b* are identical. The rotor element **3531***a* of the four-phase condenser **3504***a* is so shaped and positioned relative to the four stator plates as to have a signal voltage developed thereon which varies in phase relative to the condenser stator voltages as a function of the vector sum of the electrostatic fields embraced thereby. Hence by rotating this element to a particular position relative to the four stator plates, a signal voltage is developed on this element having the desired phase relationship relative to the signal voltage developed on the rotor **3531***b* of the condenser **3504***b*. In other words, through rotation of the rotor elements **3531***a* and **3531***b* signal voltages are developed on these elements which may be varied in phase relative to each other through any desired phase angle up to and including 360 electrical degrees. Moreover, this adjustment of the phase relationship between the signal voltages produced on the

rotor elements **3531***a* and **3531***b* of the two condensers is obtained without varying the amplitude of the voltage on either rotor element.

The voltage developed between the rotor element **3531***a* and ground is impressed between the cathode and control grid of the amplifier tube **3505***a* in an obvious manner and after amplification through this tube is impressed upon the input electrodes of the second amplifier tube **3506***a* through the coupling condenser **3532***a*. As a result of the signal amplification produced by the two tubes **3505***a* and **3506***a* and the additive action of the tuned circuit **3401***a* further to increase the amplitude of the signal voltage, this voltage as impressed between the cathode and control grid of the pulse former tube **3402***a* through the condenser **3407***a* is of sufficient amplitude completely to overload the pulse former tube. More specifically, during each positive half cycle of the signal voltage appearing across the tuned circuit **3401***a*, the control grid of the tube **3402***a* in conjunction with the crystal rectifier **3406***a* conducts, thus charging the coupling condenser **3407***a* to a value equal to the amplitude of the signal voltage. During each negative half cycle of the signal voltage, the control grid potential of the tube **3402***a* is driven well beyond cutoff. In this manner, the signal voltage is clamped to the cathode potential of the tube **3402***a*, resulting in an intermittent flow of plate current through the tube similar to that which occurs in a class C amplifier.

During each positive half cycle of the signal voltage applied to the control grid of the tube **3402***a*, a sharp increase is produced in the current flow through the self-resonant inductance element **3408***a*. As a result, this element is shock excited to develop a transient wave train which oscillates at the natural resonant frequency of the element **3408***a*, i.e., at a frequency of 2½ megacycles. The character of this wave train is such that during the first half cycle thereof the upper terminal of the element **3408***a* is negative relative to the lower terminal of the element. Moreover, the shunting crystal rectifier **3409***a* is so poled as to be nonconducting during the first half cycle of the oscillatory transient developed across the element **3408***a*. However, when the polarity of the voltage across the element **3408***a* reverses during the second half cycle of the oscillatory wave train, the crystal rectifier **3409***a* becomes conductive to absorb all of the transient energy stores in the element **3408***a*. Thus, only the first half cycle of the oscillatory transient as it appears at the top terminal of the element **3408***a* is permitted to endure. This voltage half cycle or pulse is of negative polarity. Since the element **3408***a* is self-resonant at a frequency of 2½ megacycles, it will be understod that the first negative half cycle of each transient wave train produced across this element persists for an interval of only one fifth of a microsecond. Thus as the signal voltage is continuously impressed upon the control grid of the tube **3402***a*, pulses of negative polarity are developed across the output circuit of this tube which have a repetition rate of one megacycle, but in which the pulse persistance interval is limited to one fifth of a microsecond. These successive pulses are obviously spaced by an interval of ⅘ of a microsecond.

The narrow negative pulses thus produced across the output circuit of the tube **3402***a* are impressed upon the control grid of the inverter tube **3403***a* through the coupling condenser **3414***a*. This tube functions to amplify the pulses and invert the same so that they appear as positive pulses at the anode of this tube. In this regard, it is noted that the control grid of the tube **3403***a* is normally positively biased from the anode current supply source through the resistor **3410***a* to a value such that plate current flow through the inverter tube **3403***a* is at the saturation value. By thus normally biasing the tube **3403***a* to the plate current saturation point, the reference potential relative to which the pulses are repeated by the tube **3403***a* is positively clamped at a fixed value, with the result that variations in the pulse amplitude as a consequence of relatively slow changes in the reference voltage level are minimized.

The pulses of positive polarity developed at the output side of the inverter tube **3403***a* are repeated to the control grids of the cathode follower tubes **3404***a* and **3405***a* in parallel. At this stage, the input pulses are clamped positively by virtue of grid conduction of the two tubes. In order to provide a tighter clamp with larger plate currents and output pulses as a result, the control grids are returned through the resistor **3412***a* to the anode current supply source. The pulses applied to the control grids of the two cathode follower tubes **3404***a* and **3405***a* are obviously repeated across the cathode load resistor **3413***a* common to those two tubes. This resistor functions as the output load impedance of the pulse forming channel **3400***a*. More particularly, the commutator drive conductor **41** is connected to the cathode terminal of the resistor **3413***a*, such that the narrow pulses formed in the channel **3400***a* are repeated positively to the input terminal of the commutator drive circuit **25**.

The second pulse forming channel **3400***b* operates in exactly the same manner as the pulse forming channel **3400***a* to produce positive pulses **95***a* on the ring drive pulse conductor **40** each having a pulse persistence interval of one fifth microsecond and having a repetition rate of one megacycle. As will be evident from the above explanation, however, the phase relationship between the pulses respectively developed on the conductors **40** and **41** may be varied as desired by suitable adjustment of one or both of the four-phase condensers **3504***a* and **3504***b*. In actual practice, it is preferred to so phase the pulses produced on these conductors that each pulse developed on the conductor **41** is disposed approximately midway between two successive pulses **95***a* produced on the conductor **40**; this for the purpose of centering the signal sampling pulses **96***a* within the units gate pulses in the manner generally explained above.

Commutator drive circuit 25

This circuit, as shown in Fig. 33 of the drawings, is provided for the purpose of amplifying the positive pulses appearing on the commutator drive pulse conductor **41** and to act as an impedance matching network. As previously pointed out, the pulses **96***a* produced at the output terminals of the circuit are delivered over the conductor **35** to the channel pulse commutator **22** and to each of the connectors **12***b*, **13***b* and **14***b* of the system. The pulse power requirements of these parallel connected components are fairly severe, which in part necessitates provision of the circuit **25** to amplify the pulses on the conductor **41** sufficiently to satisfy the pulse load requirements of the system.

In brief, this circuit **25** comprises a pulse inverter tube **3300** in the form of a commercial type 6C4 triode, a pulse amplifier tube **3301** in the form of the commercial type 6AK6 pentode and a cathode follower tube **3302** connected in tandem in the order named. In actual practice the cathode follower tube **3302** may comprise one section of a commercial type 6AS7 twin triode. More specifically, the input electrodes of the inverter tube **3300** are coupled to the output load resistor **3413***a* of the pulse forming channel **3400***a* over a path which includes the commutator drive conductor **41** and a coupling condenser **3303**. A resistance-capacitance coupling network comprising the two resistors **3305** and **3306** and a coupling condenser **3308** is employed to impress the pulses developed at the anode of the inverter tube **3300** upon the input electrodes of the amplifier tube **3301**. Similarly, a resistance-capacitance coupling network comprising the resistors **3312** and **3314** and a condenser **3313** is employed to impress the pulses developed at the anode of the amplifier tube **3301** upon the input electrodes of the cathode follower tube **3302**. Self-resonant inductance elements **3307** and **3310** are respectively provided in the

output circuits of the inverter and amplifier tubes **3300** and **3301** to act as high frequency compensators and thus prevent widening of the very narrow pulses which are transmitted through the drive circuit **25**. These inductance elements each have a natural resonant frequency falling somewhere in the four to five megacycle range. Bias potential for the control grid of the cathode follower tube **3302** is supplied through the resistor **3314** from a voltage dividing network comprising two resistors **3315** and **3317** which are connected in series across a one hundred volt bias potential source. Specifically, the voltage drop across the resistor **3315** is negatively applied to the control grid of the cathode follower tube **3302** through the resistor **3314** to establish the normal operating bias level of this grid. The biasing resistor **3315** is by-passed at the channel pulse frequency by means of a by-pass condenser **3316** connected in shunt therewith. As shown, the output circuit of the cathode follower tube **3302** comprises a coaxial cable **3318**, the distant or remote terminals of which are bridged by a load resistor **3319**. More specifically, the upper terminal of the resistor **3319** is connected through the central conductor of the cable **3318** to the cathode of the tube **3302** and the lower terminal of this resistor is connected to the grounded sheath of the cable.

In considering the operation of the commutator drive circuit **25**, it will be remembered that the pulses applied to the commutator drive conductor **41** at the output side of the pulse forming channel **3400***a* are of positive polarity. Each of these pulses as impressed upon the control grid of the inverter tube **3300** through the coupling condenser **3303** has the effect of increasing space current flow through the tube **3300** to produce a corresponding amplified negative pulse at the anode of this tube which is repeated through the coupling condenser **3308** to the control grid of the amplifier tube **3301**. The crystal rectifier **3304** shunting the input electrodes of the inverter tube **3300** is so poled as to be conductive during each on-pulse period. Hence, during each such interval, grid and crystal current flows to charge the condenser **3303**. During each off-pulse period, the condenser **3303** retains its charge so as to bring tube **3300** below cutoff. Thus the crystal rectifier **3304** has the effect of clamping the pulse amplitude to ground as a reference potential, i.e., functions to prevent any appreciable variation in the amplitude of the pulses developed at the output side of the inverter tube **3300**.

In the amplifier tube **3301**, the pulses are amplified to further increase the amplitude thereof and are inverted in polarity, so that they are repeated as positive pulses through the coupling condenser **3313** to the control grid of the cathode follower tube **3302**. In this regard it is noted that plate current flow through the tube **3301** is normally at the saturation value by virtue of the positive potential impressed upon the control grid of this tube through the grid current limiting resistor **3305**. Thus the anode potential level of this tube is clamped to a fixed value to prevent variations in the pulse base line voltage level and consequent amplitude distortion of the pulses. During each off-pulse period, the condenser **3308** is completely discharged through the inductance element **3307** and the resistors **3305** and **3306**.

The cathode follower tube **3302** is normally biased beyond cutoff by the voltage negatively applied to its control grid through the resistor **3314**. However, each pulse positively impressed upon the control grid of this tube drives the grid positive to the plate current saturation value thereof. Thus each pulse as reproduced in amplified form across the cathode load circuit of the tube has both its peak amplitude and base clamped to a fixed value such that successive pulses are of the same constant amplitude. More particularly, the pulses appear in amplified form across the cathode load resistor **3319** and are distributed as positive drive pulses **96***a* over the pulse distributing conductor **35** to the channel pulse commutator **22** and the connectors **12***b*, **13***b* and **14***b*. In this connection, it is pointed out that the cathode load impedance of the cathode follower tube **3302** is approximately 72 ohms which means that variations in the load imposed upon the commutator drive circuit **25** do not appreciably change the amplitude of the pulses appearing on the channel pulse conductor **35**. This low output impedance is in contrast with the output impedance of the pulse forming channel **3400***a* which is of the order of 270 ohms. It should also be understood that tremendous amplification of the pulses is provided by the three tubes **3300**, **3301** and **3302** as the pulses are transmitted through the commutator drive circuit **25**.

Ring circuits 20 and 21

As previously pointed out in the general description of the system, the units pulse ring circuit **20** and the tens pulse ring circuit **21** are identical in circuit arrangement. Accordingly, only the details of the units pulse ring circuit **20** have been illustrated in Figs. 26 and 27 of the drawings. The purpose of the units pulse ring circuit **20**, it will be recalled, is that of converting the ring drive pulses **95***a* developed on the ring drive pulse conductor **40** by the pulse forming channel **3400***b* of the circuit **19** into positive and negative units pulses of a finite and greater width than the channel pulses **96***a* and of diverting or commutating the negative units pulses thus developed successively to the negative units pulse conductors **30***a*, **30***b*–**30***j*, and the positive units pulses successively to the positive units pulse conductors **31***a*, **31***b*–**31***j*. In general, the units pulse ring circuit **20** comprises an impulse repeating and amplifying tube **2600** of the 6J6 type connected to operate as a cathode follower in repeating the drive pulses to the ring drive conductor **2665**, and ten units pulse forming and gating stages of which the first three and tenth stages are illustrated. Each units pulse gating and forming stage of the circuit **20** comprises four tubes which for convenience of explanation have been arranged in vertical alignment in Figs. 26 and 27 of the drawings. Thus the first pulse forming and gating stage comprises the vertically aligned tubes **2601**, **2611**, **2621** and **2631**, the second stage comprises the four vertically aligned tubes **2602**, **2612**, **2622** and **2632**, the third stage comprises the four vertically aligned tubes **2603**, **2613**, **2623** and **2633** and the last or tenth stage comprises the four vertically aligned tubes **2700**, **2710**, **2720** and **2730**. Considered on the basis of horizontal alignment, the tubes **2601**, **2602**, **2603**, **2700**, **2611**, **2612**, **2613** and **2710** in the two upper rows are ring circuit tubes, the tubes **2621**, **2622**, **2623** and **2720** in the third row function as amplifier and inverter tubes and the tubes **2631**, **2632**, **2633** and **2730** function as output tubes. All tubes in the circuit **20** with the exception of the input pulse amplifying and repeating tube **2600** and the output tubes **2631**, **2632**, **2633**—**2730** are commercial type 6AK6 pentodes. The output tubes **2631**, **2632**, **2633** and **2730** are commercial type 6AS7 triodes.

More specifically considered, the two top tubes of each units pulse forming and gating stage are connected in the manner more fully explained below to function as an Eccles-Jordan flip-flop circuit, such that the ten pairs of tubes in the two upper horizontal tube rows effectively comprise a pulse commutating ring circuit. The successive responses of the ten Eccles-Jordan circuits to successive drive pulses developed on the ring drive conductor **2665** result in the production of pulses at successive stages of the ring circuit which are respectively repeated through the coupling condensers **2651***a*, **2651***b*, **2651***c*–**2751***j*, to the control grids of the amplifier and inverter tubes **2621**, **2622**, **2623**—**2720**. These tubes in amplifying and inverting the pulses successively received on the control grids thereof repeat the same in amplified form through the condensers **2655***a*, **2655***b*, **2655***c*–**2755***j*, successively to the control grids of the output tubes **2631**, **2632**, **2633**—**2730**. In responding to the pulses successively impressed

upon the control grids thereof, the identified output tubes develop negative units pulses successively on the units pulse conductors **30***a*, **30***b*, **30***c*–**30***j* and simultaneously develop positive units pulses successively on the positive units pulse conductors **31***a*, **31***b*, **31***c*–**31***j* in the manner generally explained above.

In considering the operation of the units pulse ring circuit **20**, it is pointed out that the positive drive pulses developed on the ring drive conductor **40** by the pulse forming channel **3400***b* of the phase shift and pulse forming circuit **19** are positively repeated by the tube **2600** through the coupling condenser **2662** to the ring drive conductor **2665**. Specifically, each pulse appearing on the conductor **40** produces a voltage drop across the resistor **2660** which drives the parallel connected grids of the tube **2600** positive to produce a corresponding increase in the voltage across the cathode load resistor **2661** of this tube. Each time a positive pulse is thus produced across the resistor **2661** current flows through the condenser **2662** and the series connected resistors **2663** and **2664** to increase the positive potential on the ring drive conductor **2665**. Thus the positive input or drive pulses to the units pulse ring circuit **20** are amplified through the tube **2600** and repeated to the ring drive conductor **2665**. The two condensers **2659** and **2662** are of such size as to fully discharge during each period separating successive pulses on the conductor **40**. Thus the condenser **2659** is provided with a discharge path which includes the resistors **2660** and **3413***b*. Similarly, the condenser **2662** is provided with a discharge path which includes the resistors **2661**, **2663** and **2664**.

In order to start the circuit, the switch **2667** is closed to bridge the voltage dropping resistor **2668** and the condenser **2669** in series across the terminals of the negative one hundred volt bias potential source and the positive one hundred and fifty volt anode current source in series. This operation has the effect of producing a heavy current flow through the series connected elements to produce voltage drops thereacross. Initially the major portion of the available two hundred and fifty volts supplied by the two sources appears across the resistor **2668**. However, as the condenser **2669** charges up, the voltage drop across the resistor **2668** is decreased to its normal value. The transient voltage when is thus developed across the resistor **2668** has the effect of shock exciting one stage of the ring circuit into operation. After operation of the ring circuit is initiated, the switch **2667** may be opened and the circuit will continue to operate in the manner explained below. It has been found that the described method of starting the ring circuit positively precludes the possibility of two or more stages of the circuit starting to operate simultaneously. Hence the described starting arrangement constitutes an important novel feature of the ring circuit **20**.

With the ring circuit in operation, only one of the tubes **2601**, **2602**, **2603**—**2700** in the upper horizontal string is off, i.e., non-conducting and only a corresponding one of the tubes **2611**, **2612**, **2613**—**2710** in the second horizontal string is on, i.e., conducting at any given instant. Assume now that in the upper horizontal tube string, the tube **2601** is not conducting with all other tubes of this string conducting and that in the second horizontal string the tube **2611** is conducting with all other tubes of this string not conducting. With the circuit in this condition, anode current is delivered to the nine on string tubes **2602**, **2603**—**2700** through the resistors **2643***b*, **2643***c*, etc., and the inductance elements **2644***b*, **2644***c*, etc., and the common voltage dropping resistor **2641** from the anode current source which has a terminal voltage of one hundred and fifty volts. These impedance elements are so proportioned that the voltage drop across the resistor **2641** is approximately 75 volts, which means that the anode potential on the non-conducting tube **2601** is 75 volts and the anode potentials of the other tubes of the on-string are appreciably less than 75 volts. The control grid of the off-string tube **2611** is connected directly to the anode of the on-string tube **2601**, such that when the tube **2601** is not conducting the control grid of the tube **2611** has a positive potential of 75 volts reverse impressed thereon relative to ground. However, with the off-string tube **2611** conducting, the current traversing this tube and the resistors **2663** and **2664** causes a voltage drop to be produced across the two identified series connected resistors which has a magnitude of approximately 75 volts. Thus the cathode of the tube **2611** is operating at a positive potential which is substantially the same as the control grid potential of this tube. The bias voltage on the control grid of the tube **2601** is obviously a function of the voltage drop across the resistor **2646***a*, which in turn is a function of the magnitude of current flow through the tube **2611** and the series connected resistors **2647** and **2649**. More specifically, with the tube **2611** conducting, the voltage drop across the resistor **2646***a* is relatively low, i.e., of the order of 80 volts, such that the control grid of the tube **2601** is negatively biased to a potential of approximately 20 volts with respect to the tube cathode and the tube is thus biased beyond cutoff.

With the circuit in the condition just described, the next positive drive pulse produced on the drive pulse conductor **2665** in the manner explained above has the effect of increasing the cathode potential of the tube **2611** positively by an amount sufficient to cut off space current flow through this tube. In response to this operation, current flow through the resistor **2646***a* is increased to decrease the bias on the control grid of the tube **2601** sufficient to render the latter tube conductive. As the tube **2601** starts to conduct, its anode becomes less positive due to the voltage drop across the inductance element **2644***a* and the resistor **2643***a*, with the result that a negative pulse is transmitted through the condenser **2645***a* to the control grid of the next on-string tube **2602**. This pulse is of sufficient amplitude to drive the control grid of the tube **2602** beyond cutoff. As a consequence, the tube **2602** stops conducting and the anode potential thereof rises to increase the positive potential on the control grid of the companion off-string tube **2612**. So long as the positive drive pulse perists on the conductor **2665** to hold the cathode potential of the tube **2612** at a high positive level, the tube cannot conduct even though the control grid potential is positively increased in the manner just described. However, when the drive pulse on the conductor **2665** ends, the cathode potential of the tube **2612** drops sufficiently to render this tube conductive under the influence of the increased positive potential impressed on the control grid of the tube from the anode of the tube **2602**. As soon as the tube **2612** starts to conduct, the voltage drop across the resistor **2646***b* is decreased to a value such that the tube **2602** remains biased beyond cutoff from the negative one hundred volts bias potential source. Thus, the tube **2602** is held non-conductive after the pulse transmitted to the control grid thereof through the condenser **2645***a* ends. In this connection, it is pointed out that the condenser **2645***a* is chosen to have a capacitance value such that the negative pulse impressed upon the control grid of the tube **2602** cannot die out to render this tube conductive before the driving pulse on the conductor **2665** ends. This condenser is also made small enough so that it is fully discharged before it is again called upon to deliver a negative pulse to the control grid of the tube **2602**.

When the tube **2601** is rendered conductive to reduce the anode potential thereof in the manner just explained, the potential on the control grid of the tube **2611** is reduced to a value such that when the drive pulse on the conductor **2665** ends the tube **2611** is still biased beyond cutoff. Thus current conduction through the tube **2601** has the effect of preventing current flow through the tube **2611** after the pulse on the drive conductor **2665** is terminated.

In a manner entirely similar to that just described, the next succeeding pulse developed on the drive conductor **2665** has the effect of arresting current conduction through the tube **2612**, starting current conduction through the tube **2602**, arresting current conduction through the tube **2603** and starting current conduction through the tube **2613**. The manner in which additional pulses appearing on the drive conductor **2665** successively activate the fourth to tenth stages of the ring circuit will be entirely apparent from the preceding explanation. In this regard, it is noted that when the tenth pulse is delivered to the ring circuit from the drive conductor **2665** to cut off space current conduction through the tube **2710** and render the tube **2700** conductive, a negative pulse is transmitted through the condenser **2744***j* to cut off space current flow through the tube **2601**, with the result that this tube is rendered non-conductive and the tube **2611** is rendered conductive when the tenth drive pulse on the drive conductor **2665** ends.

From the above explanation it will be apparent that as successive drive pulses appear on the drive conductor **2665**, the ten stages of the ring circuit comprising the two upper horizontal tube strings are sequentially activated. In order to prevent more than one stage of the ring circuit from responding to any given drive pulse, the resistors **2663** and **2664** are so proportioned that if two of the off-string tubes **2611, 2612—2710** start to conduct simultaneously a voltage drop is produced across these resistors which has the effect of biasing both of the conducting tubes beyond cutoff. As a practical matter, this is accomplished by adjusting the short circuiting wiper **2664***a* along the resistor **2664** to a point where current flow through any one of the tubes **2611, 2612—2710** and the resistors **2663** and **2664** has the effect of biasing these tubes fairly close to the cutoff point. It will be understood that with the circuit adjusted in this manner, positive drive pulses of relatively low amplitude appearing on the drive conductor **2665** will have the effect of switching the ring circuit in the manner explained above. Another important feature of the ring circuit is the use of coupling condensers **2645***a*, **2645***b*, **2645***c*—**2744***j* connected between the anodes and control grids of successive tubes **2601, 2602, 2603—2700** of the on-string rather than between successive tubes **2611, 2612, 2613—2710** of the off-string. This arrangement is of importance for the reason that since the tubes of the off-string are normally biased considerably beyond cutoff, a relatively large change in the potentials on the control grids thereof would be required to effect the described stage switching operations in response to delivery of successive drive pulses to the ring circuit. On the other hand, the control grids of the on-string tubes **2601, 2602, 2603—2700** are normally biased to saturation through the resistors **2646***a*, **2646***b*, **2646***c*—**2746***j*. As a consequence, delivery of a small negative pulse to the control grid of any on-string tube, as to the control grid of the tube **2602** through the condenser **2645***a*, for example, has the effect of cutting off space current flow through the tube.

In considering the manner in which the step-by-step operation of the ring circuit results in the production of positive and negative units pulses successively on the negative units pulse conductors **30** and the positive units pulse conductors **31**, it is first pointed out that normally the amplifier and inverter tubes **2621, 2622, 2623—2720** are conducting heavily. Thus, the control grids of these tubes are respectively connected through the grid current limiting resistors **2652***a*, **2652***b*, **2652***c*—**2752***j* directly to the positive terminal of the anode current source, so that heavy grid and anode current flow in these tubes. On the other hand, the tubes **2631, 2632, 2633—2730**, constituting the output string, are normally biased beyond cutoff by the charges accumulated on the respective associated condensers **2655***a*, **2655***b*, **2655***c*—**2755***j*.

With the ring circuit operating in the manner described above, negative pulses are developed on the negative units pulse conductors **30***a*, **30***b*, **30***c*–**30***j* and positive pulses are developed on the positive units pulse conductors **31***a*, **31***b*, **31***c*–**31***j* only when the respective corresponding tubes **2611, 2612, 2613—2710** are conducting. Thus a negative pulse is developed on the negative units pulse lead **30***a* and a positive pulse is developed on the positive units pulse lead **31***a* when the tube **2611** is rendered conductive under the influence of a driving pulse on the conductor **2665**. More specifically, when the tube **2611** is rendered conductive to produce space current flow therethrough, the positive potential of its anode is decreased to transmit a negative pulse through the coupling condenser **2651***a* to the control grid of the tube **2621**. This pulse, during its persistence interval, has the effect of decreasing space current flow through the tube **2621** to produce a corresponding increase in the positive anode potential of the tube. As a result, the pulse is inverted to a positive pulse and repeated in amplified form through the condenser **2655***a* to the control grid of the output tube **2631**. This repeated positive pulse is of very large amplitude and has the effect of driving the control grid of the tube **2631** sufficiently positive to saturate space current flow through the tube. Thus, the tube **2631**, which as explained above is normally cut off, is abruptly rendered conductive at its saturation level. During the conducting interval of the tube **2631**, the condenser **2655***a* is heavily charged by grid current flow through this tube, such current flow occurring over a path which extends from positive terminal of the anode current source by way of the resistor **2653***a*, the inductance element **2654***a*, the condenser **2655***a*, the grid-cathode path in the tube **2631**, and the resistor **2670***a* to the grounded negative terminal of the anode current source. As a result of the heavy anode current flow thus produced through the tube **2631**, the voltage drop across the cathode resistor **2670***a* is sharply increased to produce the desired positive pulse on the units pulse conductor **31***a*. Concurrently therewith, the voltage drop across the anode load resistor **2671***a* is sharply increased to correspondingly decrease the potential on the negative units pulse conductor **30***a* and thus develop the desired negative pulse on this conductor. As shown in Figs. 37 to 40, inclusive, these pulses are produced in time position **62***a*, **62***b*, **62***c*, etc., of each pulse frame.

The duration of the pulses thus developed on the units pulse conductors **30***a* and **31***a* is measured by the spacing interval between two successive drive pulses appearing on the ring drive conductor **2665**. Thus when the next succeeding drive pulse is developed on this conductor to render the tube **2611** non-conductive in the manner explained above, the positive anode potential of this tube is sharply increased to produce a corresponding sharp increase in current flow through the tube **2621**. As a result, the positive anode potential of the tube **2621** is sharply decreased. More specifically, the voltage at the anode of the tube **2621** is less than the voltage across the condenser **2655***a*, which is now negatively applied to the control grid of the tube **2631**, by an amount sufficient to cut off space current flow through the latter tube. As a consequence, the voltage drops across the resistors **2670***a* and **2671***a* are sharply decreased to their reference value levels to terminate the pulses on the conductors **30***a* and **31***a*.

In a manner entirely similar to that just described, negative and positive units pulses are respectively produced on the conductors **30***b* and **31***b* in time positions **63***a*, **63***b*, **63***c*, etc., during successive intervals of conduction of the tube **2612**. Similarly, positive and negative pulses are respectively produced on the conductors **31***c* and **30***c* in the time positions **64** during those intervals when the tube **2613** is conducting. Thus it will be understood that negative units pulses are successively produced on the conductors **30***a*, **30***b*, **30***c*–**30***j* and positive units pulses are concurrently produced on the conductors **31***a*,

31*b*, 31*c*–31*j* in the manner illustrated in the pulse chart shown in Figs. 37 to 40, inclusive, during sustained operation of the ring circuit.

As will be apparent from the preceding explanation, the units pulses produced by each of the tubes **2631, 2632, 2633—2730** are developed by switching each tube from a completely non-conductive state to a condition where anode current flow through the tube is at the saturation level. This insures the production of units pulses of uniform amplitude having clean tops. As will also be apparent from the preceding explanation, each of the coupling condensers **2651***a*, **2651***b*, **2651***c*—**2751***j* is only required to hold the control grid potential of the associated one of the tubes **2621, 2622, 2623—2720** at the pulse producing level for an interval equal to the period separating two successive pulses on the drive conductor **2665**. Accordingly, these condensers may be relatively small. During the interval separating pulse transmission by each of these condensers and equal to the sum of nine units pulse periods, each condenser is fully discharged through one of the respective associated resistors **2652***a*, **2652***b*, **2652***c*—**2752***j*. On the other hand, each of the condensers **2655***a*, **2655***b*, **2655***c*–**2655***j* is required to hold its charge during each spacing interval separating two pulse transmission periods thereof, i.e., during intervals each equal to the sum of nine units pulse periods. Accordingly these condensers are relatively large. During such spacing intervals these condensers discharge through their respective associated resistors **2656***a*, **2656***b*, **2656***c*—**2756***j*. However, these resistors have very high resistance values such that the condenser discharge rate is low. The inductance elements, such as the elements **2644***a*, **2648***a* and **2654***a*, respectively provided in the anode circuits of the tubes forming the upper three rows serve the function of preventing width distortion of the pulses. Each of these elements is self resonant at a frequency of four to five megacycles.

As indicated above, the circuit arrangement of the tens pulse ring circuit **21** and the mode of operation of this circuit to produce the positive tens pulses successively on the conductors **33***a*, **33***b*–**33***j*, and the positive tens pulses successively on the conductors **32***a*, **32***b*–**32***j* are identical with the circuit arrangement and mode of operation of the units pulse ring circuit **20** just described. However, the driving pulses for the tens pulse ring circuit **21** are derived from the tenth units pulse forming and gating stage of the units pulse ring circuit **20**. More specifically, the positive units pulses appearing on the units pulse conductor **31***j* are employed to drive the ring circuit **21** through the pulse differentiating circuit **2701** which functions to differentiate the leading edge of each pulse. It will be understood, therefore, that the stage switching operations effected in the tens pulse ring circuit **21** occur at one tenth the stage switching rate employed in the units pulse ring circuit **20**. In other words, one positive and concurrent negative tens pulse is produced for each ten units pulses developed by the units pulse ring circuit **20**. Due to the longer time intervals involved in the stage switching operations of the tens pulse ring circuit **20**, the circuit constants of certain of the circuit components embodied in this circuit are different from those of the corresponding components of the units pulse ring circuit. This is particularly true of those condensers of the tens pulse ring circuit **21** which respectively correspond to the condensers **2650***a*, **2651***a* and **2655***a*, and those resistors of the tens pulse ring circuit which respectively correspond to the resistors **2668** and **2663** of the units pulse ring circuit **20**. Aside from the differences noted, the two ring circuits **20** and **21** are identical and it is believed that the mode of operation of the tens pulse ring circuit will be readily apparent from the explanation given above with reference to the units pulse ring circuit **20**.

Channel pulse commutator 22

As generally indicated above, this circuit is provided sequentially to gate the pulses developed in the pulse forming channel **3400***a* over the conductors **34***a*, **34***b*–**34***j* to the multiplexer **11**. In brief, this circuit, the details of which are illustrated in Figs. 28 and 29, comprises two parallel connected cathode follower tubes **2840** and **2841**, to which drive pulses are delivered from the commutator drive circuit **25** over the conductor **35**; ten pulse gating tubes **2801, 2802, 2803, 2804, 2805, 2906, 2907, 2908, 2909** and **2900**, which are jointly controlled by the drive pulses repeated thereto by the tubes **2840** and **2841** and also by positive units pulses delivered thereto over the units pulse conductors **31***a*, **31***b*–**31***j* sequentially to gate the drive pulses to ten inverter and amplifier tubes **2811, 2812, 2813, 2814, 2815, 2916, 2917, 2918, 2919** and **2910**; and ten cathode follower tubes **2821, 2822, 2823, 2824, 2825, 2926, 2927, 2928, 2929** and **2920**, to which the amplified pulses are sequentially repeated by the inverter tubes **2811, 2812—2910**. Effectively, therefore, the channel pulse commutator **22** is comprised of ten pulse gating stages, the first of which comprises the three vertically aligned tubes **2801, 2811** and **2821**, the second of which comprises the three vertically aligned tubes **2802, 2812** and **2822**, and so on to the last stage, which comprises the tubes **2900, 2910** and **2920**. The cathode follower tubes **2840** and **2841** are twin triodes of the 6J6 type, the ten gating tubes **2801, 2802—2900** are pentodes of the 6AS6 type, the inverter and amplifier tubes **2811, 2812—2910** are pentodes of the 6AK6 type, and the cathode follower tubes are triodes of any suitable commercial type. If desired, five triodes of the 6AS7 type may be employed to replace the triodes **2821, 2822—2920** in pairs; that is, five twin triodes of the 6AS7 type may be used in lieu of the ten triodes shown. The circuit components employed to couple the identified tubes of the channel pulse commutator **22** with the units pulse ring circuit **20**, the commutator drive circuit **25** and with each other are identified below in terms of the functions which they respectively perform in the network.

Normally, i.e., in the absence of pulses on the drive conductor **35**, the control grids of the cathode follower tubes **2840** and **2841** are negatively biased with respect to the cathodes of these tubes through the resistor **2843** by an amount equal to the voltage drop across the cathode load resistor **2844**. The control grids of the gating tubes **2801, 2802—2900** are connected in parallel and coupled to the load terminal of the cathode load resistor **2844** through a coupling condenser **2846**. The manner is which these control grids are normally biased to the same predetermined operating potential is explained more fully below. Positive units pulses are sequentially impressed upon the suppressor grids of the gating tubes **2801, 2802–2810** over the positive units pulse conductors **31***a*, **31***b*–**31***j* and through the coupling condensers **2831***a*, **2831***b*–**2931***j*. From an inspection of the circuit it will be noted that the control grids of the amplifier and inverter tubes **2811, 2812—2910** are connected directly to the positive terminal of the anode current source through the resistors **2833***a*, **2833***b*—**2933***j*. Thus, these tubes are normally heavily conductive, the control grids thereof being biased positively relative to the tube cathodes to produce grid current flow through the tubes which is limited only by the resistors **2833***a*, **2833***b*—**2933***j*. The normal bias for the control grids of the ten cathode follower tubes **2821, 2822—2920** is in part determined by the voltages respectively developed across the coupling condensers **2838***a*, **2838***b*—**2938***j* during operation of the circuit and also by a fixed bias voltage derived from a biasing network which comprises the series connected resistors **2941** and **2942** and a by-pass condenser **2940**.

In considering the operation of the commutator **22**, it will be understood that the drive pulses transmitted from the commutator drive circuit **25** over the conductor **35** and impressed upon the control grids of the tubes **2840** and **2841** through the coupling condenser **2842** are re-

peated as positive pulses across the cathode load resistor **2844**.

These pulses are impressed upon the parallel connected control grids of the gating tubes **2801, 2802—2900** through the coupling condenser **2846**. They occur at a frequency rate of one megacycle and, as will be apparent from the preceding explanation, are synchronized with the positive units pulses successively impressed upon the suppressor grids of the gating tubes over the conductors **31***a*, **31***b*–**31***j*. Thus each of the gating tubes **2801, 2802—2900** has a positive units pulse impressed upon the suppressor grid thereof in synchronism with each tenth drive pulse impressed upon its control grid through the coupling condenser **2846**. Moreover, and as explained above, each drive pulse is time positioned to occur at the approximate center of the coincident units pulse. Normally the gating tubes **2801, 2802—2900** are biased well beyond cutoff by the voltage developed across the condenser **2846** and negatively applied to the control grids of the gating tubes during each off-pulse period. More specifically, each time a positive pulse appears across the cathode load resistor **2844**, the condenser **2846** is rapidly charged through the clamping crystal rectifier **2845**. When the pulse terminates, the condenser **2846** cannot discharge through the rectifier **2845** and has a voltage thereacross which is substantially greater than the normal off-pulse voltage across the resistor **2844**. This condenser voltage is applied negatively to the control grids of the ten gating tubes **2801, 2802—2900** and is so much greater than the voltage across the resistor **2844** that the gating tubes are biased beyond cutoff. Thus the rectifier **2845** functions to clamp the drive pulse reference line voltage at a fixed negative value equal to the amplitude of the drive pulses. The amplitudes of the positive units pulses successively applied to the suppressor grids of the ten gating tubes must be larger than the cut-off potential of the suppressor grids of the gating tubes. In other words, the magnitude of the positive units pulses is sufficient to cause plate current cutoff between pulses in spite of any control grid action. However, and considering the first stage of the commutator **28** by way of example, when a drive pulse is applied to the control grid of the tube **2801** coincident with the application of a positive units pulse to the suppressor grid of this tube, the tube is rendered conductive for the very short interval during which the drive pulse persists. This same action occurs successively at the other nine stages of the commutator **22** as drive and units pulses are coincidentally applied to the control and suppressor grids of the gating tubes **2802, 2803—2900**. When the tube **2801** is thus rendered conductive, the anode potential thereof drops abruptly to repeat the drive pulse negatively through the coupling condenser **2832***a* to the control grid of the amplifier and inverter tube **2811**. As a result, space current flow through the tube **2811** is abruptly decreased at the start of the pulse and abruptly increased at the end of the pulse. Tremendous pulse amplification is obtained in the tube **2811**. Since space current flow through this tube is sharply decreased during the pulse period to effect a sharp increase in the anode potential of the tube, it will be understood that the pulse is repeated positively through the coupling condenser **2838***a* to the control grid of the cathode follower tube **2821**. The magnitude of this repeated pulse is sufficient to drive the control grid of the tube **2821** positive relative to the cathode of the tube, thereby to produce grid current flow in the tube. This current charges the coupling condenser **2838***a*. During the pulse interval, the tube **2821** conducts heavily to repeat the pulse across its cathode load resistor **2843***a*. Thus a drive pulse having the persistence interval of the drive pulse impressed upon the control grid of the gating tube **2801** is developed positively on the channel pulse conductor **34***a*. After the drive pulse ends, such that the gating tube **2801** is again biased below cutoff and normal heavy space current flow through the amplifier and inverter tube **2811** is resumed, the condenser **2838***a* is left charged to a voltage which biases the cathode follower tube **2821** considerably beyond cutoff. Thus the latter tube is rendered non-conductive immediately the pulse ends. The condenser **2838***a* holds its charge until the tubes **2801** and **2811** are again activated to transmit a pulse through its condenser to the control grid of the cathode follower tube **2821**. The fixed bias impressed upon the cathode follower tubes from the bleeder resistors **2941** and **2942** prevents these tubes from losing bias and drawing excessive current when either gate or driving pulses are missing.

The manner in which the nine other stages of the commutator **22** function successively to produce pulses on the other nine channel pulse conductors **34***b*, **34***c*–**34***j* is exactly the same as the described mode of operation of the first commutator stage and will readily be understood from the preceding explanation. It will thus be understood that during operation of the system the commutator **22** functions continuously to commutate channel pulses **82***a*, **83***a*, **84***a*, etc., to the ten channel pulse conductors **34***a*, **34***b*–**34***j* in sequence. These pulses are of positive polarity and each thereof has a persistence interval of one fifth of a microsecond. In order to prevent width distortion of the pulses as the described pulse commutating action is effected in the commutator **22**, inductance elements **2835***a*, **2836***a*, **2835***b*, **2836***b*, etc., each self-resonant at a frequency of from four to five megacycles, are respectively provided in the anode circuits of the gating and inverter tubes in the manner illustrated. It will be understood from the above explanation and consideration of the pulse chart shown in Figs. 37 to 40, inclusive, that while the pulses are produced at the fundamental frequency rate of one megacycle, they recur on each of the channel pulse conductors **34***a*, **34***b*–**34***j* at a frequency rate of one hundred kilocycles.

Dial tone generator 29b

As previously indicated, this generator is provided to produce the signal voltage which is employed to signal calling subscribers that dialing operations may be initiated. The circuitry of the generator is uniquely arranged to produce a wobbly dial tone signal, i.e., a 180 cycle signal modulated at fifteen cycles, which accurately simulates dial tone signals of similar character commonly in use at the present time. In this connection, it will be understood that conventional dial tone signal generators are in the form of mechanically driven choppers which produce square wave signal voltages rich in the odd numbered harmonics. The dial tone generator **29***b* is uniquely arranged to produce a signal voltage of the same character.

In brief, the generator the details of which are shown in Fig. 30, comprises two square wave oscillators **3000** and **3001** of the well known multi-vibrator type designed to operate at fifteen cycles and 180 cycles respectively, a signal mixer tube **3007** and a cathode follower tube **3008**. The oscillator **3000** comprises two multi-vibrator tubes **3002** and **3003** interconnected in an entirely conventional manner. Similarly, the oscillator **3001** comprises two multi-vibrator tubes **3004** and **3005** also conventionally interconnected. All four of these tubes are triodes of the 6C4 type. The square wave signal voltage developed by the oscillator **3000** appears across a load resistor **3009** included in the cathode circuit of the tube **3003** and is impressed upon the suppressor grid of the mixer tube **3007** through a resistance-capacitance coupling network which comprises a coupling condenser **3010** and resistor **3012**. Also included in this circuit is a low pass filter made up of a series resistor **3011** and a filter condenser **3013**. This filter is designed to pass the fifteen cycle signal voltage developed by the oscillator **3000** but will not pass the higher harmonics of this fundamental signal voltage.

The 180 cycle signal voltage developed by the second oscillator **3001** appears across a load resistor included in

the cathode circuit of the tube **3005** and is impressed upon the control grid of the mixer tube **3007** through a resistance-capacitance coupling circuit which comprises a coupling condenser **3019** and a resistor **3021**. This coupling circuit also includes a low pass filter consisting of a series resistor **3020** and a filter condenser **3022**, which is designed to pass the fundamental signal voltage of 180 cycles as well as the third, fifth and seventh harmonics thereof, but is not capable of passing the higher order harmonics of this signal voltage.

The mixer tube **3007** is a 6AS6 type pentode and is provided with output electrodes which are coupled to the input electrodes of the cathode follower tube **3008** through a signal level control potentiometer **3014** and a coupling condenser **3015**. The cathode follower tube **3008** is a commercial type 6C4 triode and is provided with a cathode load circuit comprising two series connected resistors **3016** and **3017**. The normal operating bias of this tube is derived from the resistor **3016** and is impressed upon the control grid of the tube through a biasing resistor **3023**.

In considering the operation of the dial tone generator **29*b***, it will be understood that the 15 cycle and 180 cycle signal voltages respectively developed by the oscillators **3000** and **3001** are impressed upon the suppressor and control grids respectively of the mixer tube **3007**. In the tube **3007**, the two signals are electronically mixed to produce a signal at the output side of the tube **3007** having a fundamental frequency of 180 cycles which is modulated at a frequency of 15 cycles. This signal voltage is rich in the first, third, fifth and seventh harmonics of the fundamental signal frequency of 180 cycles, due to the square wave character of the signal voltage produced by the oscillator **3001** and the signal pass characteristic of the filter consisting of the circuit elements **3020** and **3022**. The output voltage of the mixer tube **3007** appears across the potentiometer **3014** and the desired portion thereof is impressed between the input electrodes of the cathode follower tube **3008** through the coupling condenser **3015**. In this connection, it is noted that the condenser **3015** in combination with the resistor **3023** acts as a high pass filter to filter out the 15 cycle component of the signal voltage appearing on the anode of the mixer tube **3007**. Thus only the 180 cycle signal voltage modulated at the 15 cycle rate and containing the desired first, third, fifth and seventh harmonics of the fundamental signal frequency is impressed upon the control grid of the cathode follower tube. This signal voltage is repeated by the tube **3008** and appears across the cathode load resistors **3016** and **3017** thereof. The signal voltage thus developed across the two identified load resistors is transmitted to the supervisory tone gate circuits **225** of the connectors **12*b***, **13*b*** and **14*b*** over the dial tone conductor **47**.

Busy tone generator 29a

As pointed out in the general description of the system, this generator is provided for the purpose of supplying the signal voltage utilized in signaling calling subscribers when the lines to which calls are routed are tested and found busy. Specifically, the generator **29*a*** functions to produce a 180 cycle signal voltage which is keyed at a rate of one-half second on and one-half second off. In brief, this generator, the details of which are shown in Fig. 31, comprises two oscillators **3100** and **3101** of the well known multivibrator type designed to operate at 1 and 180 cycles per second, respectively. These oscillators respectively comprise the tubes **3102** and **3103** and the tubes **3104** and **3105**, and each functions to produce a square wave output signal. The generator **29*a*** further comprises a cathode follower tube **3106**, a signal keying tube **3107**, and a cathode follower tube **3108**. All of the tubes included in the generator **29*a*** are commercial type 6C4 triodes with the exception of the tube **3107** which is a commercial type 6AK5 pentode.

More specifically, the signal voltage developed by the oscillator **3101** appears across a load resistor **3120** included in the cathode circuit of the tube **3105** and is impressed upon the control grid of the keying tube **3107** through a coupling condenser **3121** and a resistor **3122**. The keying voltage developed by the oscillator **3100** and appearing at the anode of the multivibrator tube **3103** is impressed directly upon the control grid of the cathode follower tube **3106** through a resistor **3109**. The output signal developed by the cathode follower tube **3106** across the cathode load resistor **3111** and by-pass condenser **3113** of this tube if fed through a pulse correcting network **3112** comprising a series resistor **3114** and shunt condenser **3115** to the screen grid of the keying tube **3107**. The keyed 180 cycle signal voltage developed at the anode of the keying tube **3107** is impressed across a signal level control potentiometer **3116** and a desired portion of this voltage is impressed upon the control grid of the cathode follower tube **3108** through a coupling condenser **3117**. The cathode follower tube **3108** is provided with two series connected cathode load resistors **3118** and **3119**, the cathode terminal of which is connected to the generator output conductor **46**. This conductor is connected in multiple to the supervisory tone gate circuits **225** of the connectors **12*b***, **13*b*** and **14*b*** in the manner previously explained. In order to cancel out the low frequency keying component of the signal voltage appearing at the anode of the keying tube **3107**, the voltage developed across the load resistor **3111** of the amplifier tube **3106** is applied to the terminals of the potentiometer **3116** in opposition to the keying component of the signal voltage impressed upon this resistor from the anode of the tube **3107** through the isolating resistor **3124**.

From the preceding explanation, it will be apparent that the square wave keying signal of one cycle per second derived from the oscillator **3100** and impressed upon the screen grid of the tube **3107** through the cathode follower **3106** and the pulse correcting network **3112** functions to key the 180 cycle signal voltage delivered to the control grid of the tube **3107** from the oscillator **3101** at a rate of one cycle per second. Thus, during each positive half cycle of the keying voltage produced by the oscillator **3100**, the voltage drop across the cathode resistor **3111** of the cathode follower tube **3106** is increased to a value substantially equaling the normal operating screen potential level of the keying tube **3107**, with the result that this tube is rendered conductive to repeat the 180 cycle busy tone signal to the output circuit thereof. On the other hand, during each negative half cycle of the keying voltage delivered by the oscillator **3100** to the control grid of the amplifier tube **3106**, the voltage across the load resistor **3111** is decreased to such a low level that the keying tube **3107** becomes inoperative to pass the 180 cycle busy tone signal voltage.

As will be evident from the preceding explanation, during each positive half cycle of the keying voltage, when the tube **3107** is rendered conductive, the positive potential level of the tube anode is decreased, such that the voltage repeated to the potentiometer **3116** through the isolating resistor **3124** effectively comprises negative pulses of half second duration occurring at a repetition rate of one pulse per second and modulated with the 180 cycle square wave signal voltage derived from the oscillator **3101**. The leading and trailing edge of each such pulse effectively comprises a steep voltage transient as seen by the cathode follower tube **3108**. These transients, if impressed upon the control grid of the cathode follower tube **3108**, would produce large transient spikes or pulses across the load resistors **3118** and **3119** of opposite polarity at the beginning and end of each pulse. Such transient voltage spikes, if repeated to a calling line through the distributor **15** and the connector occupied with the call, would be reproduced as disturbing clicks by the receiver in use at the calling substation.

In accordance with a novel and important feature of the circuit, the production of transient spikes of the char-

acter just described across the load resistors **3118** and **3119** at the beginning and end of each on-signal period is obviated by providing means comprising the resistor **3123** for cancelling the low frequency keying voltage component of the signal voltage developed at the anode of the tube **3107** and impressed upon the potentiometer **3116** through the resistor **3124**. This is accomplished by impressing each positive pulse developed across the resistor **3111** directly upon the potentiometer **3116** through the coupling resistor **3123**, so that during each pulse period when the tube **3107** is acting to repeat a signal modulated pulse negatively to the potentiometer, the positive pulse derived from the resistor **3111** holds the average voltage across the resistor **3116** at the same amplitude level. Thus the keying component of the signal voltage developed at the anode of the tube **3107** is cancelled out as seen by the potentiometer **3116**, so that only the 180 cycle square wave signal voltage is impressed upon the control grid of the cathode follower tube **3108**. In this connection, it is noted that the pulse correcting network **3112** functions to produce time coincidence between the keying component of the signal voltage developed at the anode of the tube **3107** and the positive pulse concurrently developed across the cathode load resistor **3111**. If desired or necessary, the two circuit components **3114** and **3115** of the pulse correcting network **3112** may be made adjustable in order to obtain the described low frequency pulse cancelling effect. It is also noted that the isolating resistor **3124** is characterized by a relatively high resistance in order to insure that the keying operation of the tube **3107** will not interfere with cancellation of the keying pulses across the potentiometer **3116**.

Ringback tone generator 29c

This circuit is illustrated in Fig. 25A and is provided to generate the low frequency signal voltage which is used to signal a calling substation that a called substation is being rung. More particularly, the circuit is designed to produce a signal voltage having a frequency of approximately 200 cycles per second, to which is added a lower frequency of approximately 20 cycles per second. In general, the circuit comprises an oscillator **2500** consisting of two triodes **2501** and **2502** of the 6C4 type connected to operate as a conventional multivibrator. This oscillator is designed to develop a square wave signal voltage at a frequency of 200 cycles per second and the output terminals thereof are coupled through an isolating resistor **2504** and a coupling condenser **2505** to the input electrodes of a cathode follower tube **2506**. The higher order harmonics of the square wave signal voltage developed by the oscillator **2500** are shunted through a condenser **2510** and thus prevented from reaching the grid of the cathode follower tube **2506**. The tube **2506** is also a commercial type 6C4 triode and is provided with a cathode load circuit which includes two serially related resistors **2512** and **2513**. In order to add to the signal voltage impressed upon the input electrodes of the cathode follower tube **2506** a predetermined low frequency of 20 cycles per second, a conventional sawtoothed signal generator is provided which comprises a four electrode thyratron **2507** of the 5696 type manufactured by the Radio Corporation of America, a grid biasing circuit including the resistor **2511***a*, an adjustable frequency determining anode resistor **2511***b* and the usual condenser **2511***c*. The sawtooth voltage developed across the condenser **2511***c* is impressed upon the control grid of the tube **2506** through an isolating resistor **2508** and the coupling condenser **2505**.

In considering the operation of the generator **29***c*, it will be understood that the sawtooth generator comprising the tube **2507** and the condenser **2511***c* functions to provide a flutter component to the control grid of the tube **2506** at the predetermined slow rate of 20 cycles per second. It will also be understood that the oscillator **2500** functions to impress a rectangular wave signal voltage upon the control grid of the tube **2506**, which provides the principal component signal frequency of 200 cycles per second. Thus a composite signal voltage having a fundamental signal frequency of 200 cycles per second with an added component at the lower frequency of 20 cycles per second is impressed upon the control grid of the cathode follower tube **2506** through the coupling condenser **2505**. Higher order harmonics of the two signal voltages are by-passed to ground through the condenser **2510** and hence are prevented from reaching the grid of the tube **2506**. However, the composite signal voltage applied to the grid of this tube is rich with the lower order harmonics of the two signal voltages. The composite signal voltage impressed upon the grid of the tube **2506** is repeated by this tube and appears across the cathode load resistors **2512** and **2513**, and that portion thereof which is developed across the load resistor **2513** is impressed upon the ringing keying circuit **27** in the manner explained below.

Supervisory and ringing carrier supply circuit 26

This circuit is provided synchronously to produce sine wave signal voltages at different voltage levels and having the same frequency of 100 kilocycles, which are utilized in the line circuits of the system for call forwarding and ringing control operations in the manner described more fully below. Generally considered, the circuit comprises a flip-flop circuit including a tube **2514** of the twin triode 6J6 type which is controlled by the units pulse ring circuit **20** to produce a square wave signal voltage at a 100 kilocycle rate, a signal amplifier and inverter tube **2516** of the 6C4 type, a filter network **2517**, and two cathode follower tubes **2524** and **2525** of the 6J6 type having their input electrodes coupled in parallel to the output terminals of the filter **2517** through the coupling condensers **2520** and **2522** respectively. The cathode follower tube **2524** is provided with a cathode load circuit which consists of two series connected load resistors **2526** and **2527**. Similarly, the cathode follower tube **2525** is provided with a cathode load circuit which comprises the two serially related resistors **2528** and **2529**.

In considering the operation of the circuit **26**, it is first pointed out that operation of the flip-flop circuit comprising the tube **2514** is governed by positive units pulses transmitted to the left and right control grids of this tube, respectively, through the coupling condensers **2530** and **2531** from the positive units pulse conductors **31***a* and **31***f*. In this connection it will be observed from the pulse chart shown in Figs. 37 to 40, inclusive, that the positive units pulses developed on the two conductors **31***a* and **31***f* are spaced five time positions apart. Normally one section of the tube **2514** is conducting, whereas the other section of the tube is biased beyond cutoff. Thus, assume that during a given drive pulse spacing interval the right section of the tube **2514** is conducting. With this section of the tube conducting, the voltage drop across the resistor **2533** is relatively high such that the positive potential of the anode **2514***a* is relatively low. Under these circumstances, the voltage drop across the resistor **2536** is relatively low such that the voltage existing across the cathode biasing resistor **2537** is high enough to bias the left section of the tube **2514** beyond cutoff. With the circuit in this condition, the next positive units pulse to appear on the condutcor **31***a* is impressed upon the left control grid of the tube **2514** through the coupling condenser **2530** and has the effect of decreasing the bias on the section of the tube to render the same conductive. Immediately the left section of the tube **2514** starts to conduct, the voltage drop across the resistor **2532** is increased to decrease the voltage drop across the resistor **2538** to a point such that the voltage across the cathode resistor **2537** of the tube biases the right section of the tube beyond cutoff. When this section of the tube stops conducting, the voltage drop across the anode load resistor **2533** drops to a value such that

when the positive units pulse on the conductor **31***a* ends, the voltage drop across the resistor **2536** exceeds that across the cathode resistor **2537** by an amount sufficient to maintain conduction through the left section of the tube **2514**.

As will be understood from the above explanation, the next units pulse transmitted to the carrier supply circuit **26** appears on the units pulse conductor **31***f* and is of positive polarity. Application of this pulse to the control grid of the right section of the tube **2514** causes the reverse of the action just described to occur, i.e., the right section of this tube is rendered conductive and the left section of the tube is rendered non-conductive. Thus, as positive units pulses are successively transmitted to the circuit **26** alternately over the two conductors **31***a* and **31***f*, the two sections of the tube **2514** are alternately rendered conductive. It will be understood, moreover, that since the units pulses are derived from the units pulse ring circuit **20** over the first and sixth units pulse conductors **31***a* and **31***f*, the switching periodicity of the flip-flop circuit comprising the tube **2514** is entirely uniform, i.e., each period of conduction of each section of this tube is equal to each period of conduction of the other section of the tube. It will thus be apparent that the positive voltage of the tube anode **2514***b* is periodically increased and decreased to produce a square wave signal voltage at this anode.

This square wave signal voltage is applied to the control grid of the cathode follower tube **2516** through the coupling condenser **2515**, with the result that the signal voltage is amplified through this tube to appear across the series connected resistors **2518** and **2519** and the filter network **2517**. The network **2517** performs the function of extracting harmonics from the reproduced signal voltage to the extent required to produce a substantially sine wave voltage across the two load resistors **2518** and **2519**. The manner in which the filtering action occurs is entirely conventional and will be readily apparent to those skilled in the art.

The voltage developed across the load resistors **2518** and **2519** is impressed across the signal level adjusting potentiometer **2521** and the cathode load resistor **2527** of the tube **2524** through the coupling condenser **2520**. This same voltage is also impressed on the signal level determining potentiometer **2523** and the cathode load resistor **2529** of the tube **2525** through the coupling condenser **2522**. An adjustable portion of the voltage thus developed across the potentiometer **2521** is impressed directly upon the control grids of the cathode follower tube **2524**, with the result that the sine wave signal voltage is reproduced across the two cathode load resistors **2526** and **2527** of this tube and delivered to the ringing keying circuit **27**. Obviously, by adjusting the tap **2521***a* along the potentiometer **2521**, the magnitude of the signal voltage developed across the serially related resistors **2526** and **2527** may be changed to establish the desired signal voltage level. Similarly, an adjustable portion of the signal voltage produced across the potentiometer **2523** is impressed upon the control grids of the cathode follower tube **2525**, with the result that this voltage is repeated across the series connected cathode load resistors **2528** and **2529** of this tube. Here again, the magnitude of the signal voltage produced across the load resistors **2528** and **2529** of the tube **2525** may be changed as desired by adjustment of the tap **2523***a* along the potentiometer **2523**. The voltage developed across the two resistors **2528** and **2529** is supplied to the various line circuits of the system over the common multiple conductor **37**. The purpose of providing the two cathode follower tubes **2524** and **2525** is that of isolating the ringing signal carrier voltage supplied to the keying circuit **27** from the control carrier voltage supplied to the various line circuits of the system. Further, the use of two tubes to perform the desired isolating function permits two synchronously related signal voltages of the same frequency to be produced at the different voltage levels required in the keying circuit **27** and the individual line circuits of the system.

Ringing keying circuit 27

This circuit is illustrated in Fig. 25B and is provided for the purpose of synchronously keying the ringback tone signal voltage delivered to the various connectors of the system and the ringing carrier control voltage transmitted to the various line circuits of the system. More specifically, the circuit is arranged synchronously to key these two signal voltages at a rate of approximately one second on and four seconds off. Generally considered, the circuit comprises a rectangular wave keying oscillator **2550** of the well known multivibrator type which includes a pair of triodes **2551** and **2552** of the 6C4 type. The rectangular wave output voltage developed by this oscillator is impressed upon the control grid of a cathode follower tube **2554**, also of the 6C4 type, through a coupling resistor **2553**. This cathode follower tube is provided with a load resistor **2555** which is coupled through a filter circuit comprising a series resistor **2556** and a shunt condenser **2557** to the parallel connected screen grids of two keying tubes **2558** and **2559**. The first identified keying tube is provided to key the ringback tone signal supplied to the connectors **12***b*, **13***b* and **14***b* of the system. To this end, this tube has its control grid coupled to the output load resistor **2513** of the ringback tone generator **29***c* through the coupling condenser **2560** and has its anode coupled to the control grid of a tandem related cathode follower tube **2566** through a coupling network which comprises a signal level adjusting potentiometer **2568** and a coupling condenser **2569**. For the purpose of preventing the low frequency keying component of the voltage developed at the anode of the keying tube **2558** from being impressed upon the control grid of the cathode follower tube **2566**, an isolating resistor **2582** is connected between this anode and the upper terminal of the potentiometer **2568**, and the load circuit of the tube **2554** is arranged to deliver cancelling pulses to the potentiometer **2568** through the resistor **2581**. The circuit further comprises a keying tube **2559** which is arranged periodically to repeat the 100 kilocycle ringing carrier signal developed by the circuit **26** and impressed upon its control grid through the coupling condenser **2561** to the control grid of a cathode follower tube **2567** through a coupling condenser **2570**.

In considering the operation of the keying circuit **27**, it will be understood that the low frequency ringback tone signal voltage developed across the load resistor **2513** in the generator **29***c* continuously excites the control grid of the keying tube **2558** through the coupling condenser **2560**. Similarly, the 100 kilocycle signal voltage developed across the series connected load resistors **2526** and **2527** in the carrier supply circuit **26** continuously excites the control grid of the keying tube **2559** through the coupling condenser **2561**. Referring now to the keying oscillator **2550**, this oscillator functions in an entirely conventional manner to develop a rectangular wave keying voltage at the anode of the tube **2552** having a frequency of one-fifth cycle per second. This signal voltage is impressed upon the control grid of the tube **2554**, is repeated by this tube and appears across the load resistor **2555**. More specifically, the rectangular wave voltage variations across the load resistor **2555** are of such magnitude that during each period when space current flow through the tube **2554** is decreased, the screen grid potentials of the two tubes **2558** and **2559** are reduced to such low values that the tubes will not repeat the signal voltages impressed upon the control grids thereof. On the other hand, each time space current flow through the tube **2554** is increased to increase the voltage drop across the resistor **2555**, the screen grids of the keying tubes **2558** and **2559** are driven sufficiently positive to render these two tubes operative to

repeat the signal voltages continuously impressed upon the control grids thereof. It will thus be understood that the keying tubes **2558** and **2559** are only operative as signal voltage repeaters during the short "on" period of the rectangular wave keying voltage developed by the oscillator **2550**. During each period when the tube **2559** is rendered operative, the 100 kilocycle signal voltage impressed upon the control grid thereof is repeated from the anode of this tube through the coupling condenser **2570** to the control grid of the cathode follower tube **2567**. Thus the 100 kilocycle signal voltage is reproduced across the series connected load resistors **2573** and **2574** of the cathode follower tube **2567**. From the cathode terminal of this load circuit, the 100 kilocycle carrier or signal voltage is transmitted to each of the line circuits of the system over the conductor **38**.

During each period when the keying tube **2558** is rendered operative under the control of the oscillator **2550** and the cathode follower tube **2554**, it functions to repeat the ringback tone signal voltage derived from the generator **29***c* through the isolating resistor **2582** to the potentiometer **2568**. An adjustable portion of the signal voltage thus developed across the resistor **2568** is impressed upon the control grid of the cathode follower tube **2566** through the coupling condenser **2569**. Here also, the signal voltage is repeated through the tube **2566** and reproduced across the cathode load resistors **2571** and **2572**. The signal voltage developed across these two series connected resistors is transmitted to the supervisory tone gate circuits **225** of each of the connectors **12***b*, **13***b* and **14***b* over the common conductor **48**.

It will be understood that the signal voltage delivered to the connectors of the system over the conductor **48** from the cathode load circuit of the tube **2566** is a supervisory signal voltage which is audibly reproduced to signal calling subscribers the desired called substations are being rung. In order to prevent the low frequency keying component of the signal voltage developed at the anode of the tube **2558** from being audibly reproduced as an objectionable click at the beginning and end of each ringback tone signal voltage pulse in the manner previously explained with reference to the busy tone generator **29***a*, the low frequency keying component of this signal voltage is cancelled out and thus prevented from reaching the grid of the tube **2566**. More specifically, each positive keying pulse developed across the resistor **2555** is delivered directly to the potentiometer **2568** through the coupling resistor **2581** to cancel out the decrease in voltage across the resistor **2568** which would otherwise occur due to increased conductivity of the tube **2558** during the pulse period. Coincidence between the leading and trailing edges of the pulses impressed upon the potentiometer **2568** from the resistor **2555** and the tube **2558**, respectively, is insured through the action of the pulse correcting network comprising the resistor **2556** and condenser **2557**. It will be recognized that the pulse cancelling arrangement just described and employed in the ringing keying circuit **27** is identical with that used in the busy tone generator **29***a*.

While not directly a part of the ringing keying circuit **27**, the ringing facilities of the system include a ringing current generator, not shown, having any desired output frequency, but indicated as having a frequency of 20 cycles, the terminals of which are connected to the primary winding of a transformer **2578**. The secondary winding of this transformer is connected between the negative terminal of an anode current source **2579** and the ringing current conductor **61***a*, which extends to each of the line circuits of the system. These common facilities further comprise a bias potential source **2580** having its terminals connected between the ringing current conductor **61***a* and lead **61***b* which is also multipled to the various line circuits of the system in the manner indicated. The manner in which the two identified current sources are employed in ringing a called substation is explained more fully below.

Link allotter 24

This circuit, as shown in Fig. 32, is provided to produce the allotter pulses which are utilized in successively assigning the finder-connector links **12**, **13** and **14** to the use of calling lines. In this regard it will be recalled from the preceding explanation that each allotter pulse is at least equal to and preferably several times longer than each frame of units pulses. By way of example, the allotter **24** may be designed to produce allotter pulses successively on the three allotter conductors **36***a*, **36***b* and **36***c* at a frequency of one kilocycle, which, of course, means that each allotter pulse persists for an interval ten times greater than the time interval of each units pulse frame.

Briefly considered, the link allotter **24** comprises a blocking oscillator **3200** of entirely conventional type and three link allotting stages. Each link allotting stage comprises two tubes of a pulse forming ring circuit and a cathode follower tube. Thus, the first link allotting stage of the allotter comprises an on-string tube **3210***a*, an off-string tube **3211***a* and a cathode follower tube **3212***a*. In this regard it is pointed out that the three on-string tubes **3210***a*, **3210***b* and **3210***c* and the three off-string tubes **3211***a*, **3211***b* and **3211***c* comprise a pulse counting and forming circuit which is substantially identical with the previously described pulse counting and forming circuit of the units pulse ring circuit **20** and operates in the same manner. More specifically, the tubes **3210** of the link allotter respectively correspond to the tubes **2601**, **2602**, etc., of the units pulse ring circuit **20**, and the off-string tubes **3211***a*, **3211***b* and **3211***c* respectively correspond to the off-string tubes **2611**, **2612**, etc., of the ring circuit **20**. The three cathode follower tubes **3212***a*, **3212***b* and **3212***c* are directly coupled to the respective stages of the pulse counting and forming circuits through coupling condensers **3213***a*, **3213***b* and **3213***c* respectively.

As shown, the blocking oscillator **3200** comprises an oscillator tube **3201**, a three winding coupling transformer **3202** and a resistance-capacitance timing circuit consisting of a condenser **3203**, a resistor **3204** and an adjustable potentiometer **3205**. The output winding **3202***c* of the transformer **3202** is coupled through a crystal rectifier **3203** to a load resistor **3206** across which rectified pulses developed by the blocking oscillator **3200** are reproduced. These pulses are fed through a coupling condenser **3207** to two series connected resistors **3208** and **3209** which respectively correspond to the resistors **2663** and **2664** of the units pulse ring circuit **20**. All tubes of the link allotter **24** are triodes of the 6C4 type.

In considering the operation of the link allotter **24**, it is first pointed out that the mode of operation of the blocking oscillator **3200** is substantially conventional. Briefly, however, if it is assumed that the grid condenser **3203** has been charged during one operating cycle of the oscillator, the voltage thereacross serves to bias the tube **3201** well below cutoff. As the charge on the condenser **3203** leaks off through the resistor **3204** and the potentiometer **3205**, the bias voltage on the control grid of the tube **3201** is decreased to a point where this tube starts to conduct. As anode current starts to flow through the tube a magnetic field is set up around the anode winding **3202***b* of the transformer **3202**. This field induces a voltage in the grid winding **3202***a* of the transformer which is positively applied through the coupling condenser **3203** to the grid of the tube **3201**. As this voltage builds up across the winding **3202***a*, the grid of the tube **3201** is driven positive relative to the cathode of this tube until a condition of anode current saturation is reached in the tube. Immediately the grid of the tube **3201** is driven positive relative to the tube cathode, grid current flows through the tube to charge the condenser **3203**. When anode current flows through the tube is stabilized at the saturation level the induced voltage in the winding **3202***a*

drops to zero. As a consequence, the voltage across the condenser **3203** immediately drives the grid of the tube **3201** sufficiently negative to cut off space current flow through the tube. As space current flow through the tube decreases an induced voltage is developed in the winding **3202***a* which is of the correct polarity to assist in biasing the tube **3201** beyond cutoff. After the voltage across the winding **3202***a* drops to zero, the condenser **3203** starts to discharge and thus initiates a new operating cycle of the oscillator.

From the above explanation it will be understood that pulses of current are caused to traverse the anode winding **3202***b* at a predetermined periodic rate. More specifically, the width or persistence interval of each pulse is determined by the resistance and inductance parameters of the transformer **3202**, whereas the spacing interval between pulses is determined by the time constant of the resistance-capacitance circuit consisting of the condenser **3203** and the resistors **3204** and **3205**. The current pulses traversing the anode winding **3202***b* cause an alternating voltage to be induced in the transformer output winding **3202***c*. Alternate half cycles of this voltage are passed by the rectifier **3203** to appear across the load resistor **3206**. More specifically, the rectifier **3203** is so poled that only those half cycles of the voltage developed across the winding **3202***c* which drive the upper terminal of the resistor **3206** positive with respect to ground are passed by the rectifier **3203**. Thus, positive pulses are produced across the load resistor **3206** during continued operation of the oscillator **3200**. These pulses are impressed upon the series connected resistors **3208** and **3209** through the coupling condenser **3207**. The positive pulses thus developed across the two resistors **3208** and **3209** are applied to the cathodes of the off-string tubes **3211***a*, **3211***b* and **3211***c* in parallel to drive the ring circuit of the allotter **24** in a manner which will be fully apparent from the preceding explanation with reference to operation of the units pulse ring circuit **20**. From this explanation, it will be understood that the on-string tubes **3211***a*, **3211***b* and **3211***c* are rendered non-conductive during succeeding non-overlapping periods, each of which equals the period separating the starting instants of two succeeding pulses developed by the blocking oscillator **3200**. During the successive periods when the identified on-string tubes are respectively non-conducting, positive pulses are transmitted thereby successively through the coupling condensers **3213***a*, **3213***b* and **3213***c* to the respective control grids of the cathode follower tubes **3212***a*, **3212***b* and **3212***c*. Each time a positive pulse is thus impressed upon the control grid of the tube **3212***a*, for example, space current flow through this tube is increased to increase the voltage drop across the load resistor **3214***a* and thus repeat the positive pulse to the link allotter conductor **36***a*. Bias for the tube **3212***a* is derived from the condenser **3213***a* by the normal positive pulse clamping principle previously described herein. Positive allotter pulses are similarly developed successively on the other two allotter conductors **36***b* and **36***c* as the ring circuit of the link allotter **24** is driven under the control of the blocking oscillator **3200**.

Substations A and B

The substations respectively terminating the various lines of the system are identical in arrangement. Accordingly, the details of the substation A terminating the line **23** have been illustrated in Fig. 11A of the drawings, but the substation B terminating the line **32** has been only diagrammatically illustrated. Any desired substation arrangement adapted for use in conventional automatic telephone systems may be employed in the present system with but slight modification. The illustrated circuit of the substation A comprises the usual transmitter **1101**, receiver **1102**, hook or cradle switch **1103**, coupling transformer **1104**, calling or impulsing device **1105** and ringer **1106** interconnected to form a conventional substation circuit. In addition, the circuit is equipped with a neon or other gas filled tube **1107** which is employed to bridge the ringer **1106** across the conductors of the line **23** in series with the impulsing contacts of the calling device **1105**. This tube has a voltage breakdown rating of approximately 100 volts. Operation of the substation equipment as provided at the substation A is entirely conventional and will be readily apparent to those skilled in the art. Accordingly, a detailed description thereof is not included herein. However, in so far as required to explain the mode of operation of the line circuit **10** terminating the line **23** at the exchange end of the line, the operation of the substation A is explained below in the following detailed description of the line circuit **10**.

Line circuits 10 and 16

As previously indicated, the two identified line circuits are respectively utilized to terminate the lines **23** and **32** at the exchange end of the system. These two line circuits as well as the line circuits terminating the other lines of the system are identical in circuitry and mode of operation. Accordingly, corresponding components of the two line circuits have been identified by reference numbers having the same tens and units digits, but differing in the hundreds and thousands digits to identify the figures of the drawings in which the individual components thereof are to be found. Since the two line circuits **10** and **16** are identical in every respect, the following description will be confined to the line circuit **10** illustrated in Figs. 11A and 12 of the drawings. It will be understood, however, that this description accurately applies to the line circuit **16** as shown in Figs. 23 and 24 of the drawings as well.

Briefly considered, the line circuit **10** comprises a coupling transformer **1111** which is connected directly to the conductors of the line **23** through two selenium crystals rectifiers **1108** and **1109**, a hybrid transformer **1200**, a low pass filter **1114** having an upper cut-off frequency of approximately three and one-half kilocycles, and a balancing network **10***a*. The identified components of the line circuit **10** are utilized in transmitting intelligence signals from the distributor **15** to the line **23** and over this line to the substation A in such manner that the signals are not revertively transmitted back to the multiplexer **11**. In addition, the line circuit **10** comprises a detector and amplifier circuit, including a tube **1204** of the 6AK6 type, which functions to reconstruct of detect the signal or intelligence components of signal bearing pulses distributed thereto from the distributor **15** over the conductor **44***a*, to amplify the detected signals, and to impress the detected signals upon the primary winding of the hybrid coil **1200** for transmission to the line **23**.

Control signals developed at the substation A and transmitted to the line circuit **10** over the line **23** are impressed upon a limiting amplifier network which comprises a three electrode tube **1131** of the well known 6AQ6 type. This tube, in cooperation with the other illustrated circuit components of the limiting amplifier network, functions to convert the 100 kilocycle control carrier developed by the carrier supply circuit **26** into a bias voltage of constant amplitude which is utilized to open those units gate circuits of the multiplexer **11** which individually correspond to the units designation **3** assigned to the line **23**. For the purpose of selectively energizing the ringer **1106** provided at the substation A on calls incoming to this substation, ringing control facilities are provided in the line circuit **10** which comprise a four electrode ringing control tube **1208** of the gas filled type. This tube is preferably of the commercial type 2D21 and in cooperation with its associated circuit elements responds to ringing control signals transmitted thereto from the amplifier tube **1204** to effect the transmission of the ringing current derived from the transformer **2578** over the line **23** to activate the ringer **1106** provided at the substation A. The individual circuit elements of the line circuit **10** not specifically re-

ferred to above will be described below in explaining the functions which they perform in handling calls involving the line 23.

Briefly to consider the quiescent state of the line circuit 10, i.e., the condition thereof which prevails when the line 23 is not occupied with a call, it is pointed out that so long as negative signal bearing pulses are not transmitted to the control grid of the tube 1204 from the distributor 15 over the conductor 44*a*, this tube is fairly heavily conductive, such that a relatively large voltage drop is developed across the resistor 1202 to correspondingly limit the voltage across the condenser 1219. These voltages remain fixed, under the conditions stated, at a constant level and the voltage across the condenser 1219 is held at a value insufficient to overcome the blocking bias voltage impressed upon the crystal rectifier 1216 from the potentiometer 1214 through the resistor 1213. As a consequence, the crystal rectifier 1216 is biased to prevent current conduction therethrough and hence the keyed 100 kilocycle ringing control signal developed by the circuits 26 and 27 is prevented from reaching the grid of the ringing control tube 1208 to fire this tube. Thus the ringing control facilities of the line circuit 10 are normally held in an inactive condition.

As far as the limiting amplifier network comprising the tube 1131 is concerned, it will be noted that when the substation A is not in use, the contacts of the hook or cradle switch 1103 are open, so that a loop circuit including the conductors of the line 23 is not completed between the substation A and the line circuit 10. As a consequence, no current is permitted to flow from the negative terminal 1112 of the 48 volt current source through the resistor 1122. However, current does flow from this terminal through the potentiometer 1128 to the grounded terminal of this source. The resulting voltage drop across the left portion of the potentiometer 1128 is impessed across the terminals of the crystal rectifier 1125 through the resistors 1122, 1124 and 1127 with the correct polarity to bias this rectifier against current conduction. Thus, the 100 kilocycle supervisory carrier voltage developed by the carrier supply circuit 26 is prevented by the rectifier 1125 from reaching the control grid of the limiting amplifier tube 1131. The resistors 1124 and 1127 function as blocking resistors to prevent the 100 kilocycle supervisory signal voltage from being impressed upon the line 23. Any portion of this signal not blocked by the identified resistors is by-passed to ground through the condenser 1110. It will be apparent, therefore, that so long as the line 23 is not occupied with a call, all components of the line circuit 10 are rendered inactive as signal transmission components.

Operation of the line circuit 10 to handle a call originating at the substation A may well be described in terms of the call from the substation A to the substation B considered above in the general description of the system. Specifically, when the receiver 1102 or hand set at the substation A is removed from its supporting hook or cradle, the contacts of the hook or cradle switch 1103 are closed to complete a calling loop circuit between this substation and the line circuit 10. This loop circuit extends from the ground terminal of the 48 volt current source, by way of the transformer winding 1111*a*, the selenium rectifier 1108, the upper side of the line 23, the impulsing contacts of the calling device 1105, the transmitter 1101, the contacts of the hook or cradle switch 1103, the left winding of the transformer 1104, the lower side of the line 23, the selenium rectifier 1109, the transformer winding 1111*b* and the resistor 1122 to the negative terminal 1112 of the 48 volt current source. Current flow over this loop circuit is in the correct direction to bias the two rectifiers 1108 and 1109 to the linear portions of the operating characteristics thereof. In other words, each of the rectifiers 1108 and 1109 is rendered effective to pass alternating signal voltages superimposed upon the unblocking bias voltages impressed thereacross so long as the signal voltages do not exceed in amplitude the magnitude of the unblocking bias voltage. When the described loop circuit is completed to cause current flow through the resistor 1122 in a direction from the terminal 1123 to the terminal 1112, a voltage is developed across the resistor 1122 which substantially exceeds the rectifier blocking voltage appearing across the left portion of the potentiometer 1128. Thus the upper terminal of the rectifier 1125 is driven positive relative to the lower terminal thereof to render this rectifier conductive. As a consequence, the 100 kilocycle supervisory carrier signal developed by the circuit 26 is permitted to traverse the rectifier 1125 over a circuit which includes the conductor 37, the condenser 1129, the resistor 1127 and the right portion of the potentiometer 1128. That portion of the 100 kilocycle control carrier of the potentiometer 1128 is impressed between the cathode and control grid of the limiting amplifier tube 1131 through the coupling condenser 1126. As a consequence, an amplified 100 kilocycle signal voltage of constant amplitude is developed at the anode of the tube 1131 in the manner more fully explained below. Alternate half cycles of this signal voltage are transmitted through the coupling condenser 1133 and the crystal rectifier 1138 to charge the condenser 1139. During intervening half cycles of the 100 kilocycle voltage, the rectifier 1138 prevents current flow through the condenser 1139 and this condenser tries to discharge through the resistor 1137 and the back resistance of the rectifier 1138. However, the back resistance of this rectifier is very high, of the order of one megohm, so that only a small portion of the charge accumulated on the condenser 1139 is dissipated during each short discharge interval. Thus, a unidirectional voltage is effectively developed and maintained across the condenser 1139 so long as the 100 kilocycle supervisory carrier signal is impressed upon the control grid of the tube 1131 in the manner explained above.

The unidirectional voltage developed across the condenser 1139 in the manner just explained opposes the voltage of the 15 volt current source having its negative terminal connected to the terminal 1113, so that the potential impressed upon the multiplexer input conductor 53 is reduced to a value which will permit current conduction through the units gate tube 1323 of the multiplexer 11 in the manner more fully explained below. More specifically, the net bias voltage, i.e., the difference between the voltage of the 15 volt current source connected to the terminal 1113 and the voltage developed across the condenser 1139, is impressed upon the multiplexer input conductor 53 through a parallel network which comprises the resistor 1144 and the oppositely poled copper oxide rectifiers 1142 and 1143. The circuit constants of the network including the identified components of the coupling network as well as the components of the limiting amplifier are such that the net voltage impressed upon the multiplexer conductor 53 in response to an off hook condition at the substation A is held precisely at the negative potential relative to ground which is necessary to obtain class A operation of the units gate tube.

As indicated above, the purpose of the limiting amplifier network comprising the tube 1131 is that of producing a constant bias voltage across the condenser 1139 in response to an off hook condition at the substation A regardless of variations in the magnitude of current flow through the resistor 1122. The limiting amplifier also serves to amplify the 100 kilocycle supervisory carrier signal, but the more important function performed thereby is that of producing and maintaining a constant bias voltage across the condenser 1139 when an off hook condition prevails at the substation A. In this connection, it is noted that each of the units gating tubes, such, for example, as the tube 1323, of the multiplexer is operated as a class A amplifier which means

that the bias derived from the line circuit **10** when an off hook condition prevails at the substation A should be such that the tube **1323** is biased to the exact center of the class A operating range of the tube. When tubes of the 6AS6 type are used in the multiplexer as units gating tubes, this biasing requirement means that the suppressor grid of each tube must be biased precisely to the center of a three volt operating range when an off hook condition is produced at the substation corresponding to the particular tube. Thus, it is important that the voltage drop developed across the condenser **1139** be maintained precisely constant.

As opposed to the requirement outlined in the preceding paragraph, it will be understood that the line circuit **10** is designed for use with lines of varying lengths having varying loop resistances. Depending upon the loop resistance of a particular line with which the line circuit **10** may be associated, the current flow through the resistor **1122** may vary within wide limits to produce correspondingly wide variations in the magnitude of the voltage drop produced across this resistor when the line circuit is taken into use. It has been found that variations in the line loop resistance, as between long lines of high resistance and short lines of low resistance, may vary the voltage developed across the resistor **1122** and the resistor **1124** over a range extending from 7.2 volts to 39 volts. But for the novel arrangement of the limiting amplifier comprising the tube **1131** specifically described below, such variations in the voltage across the resistor **1122** would result in variations in the voltage drop across the condenser **1139**.

The manner in which variations in the voltage drop produced across the resistor **1122** are prevented from producing corresponding variations in the voltage across the condenser **1139** when an off hook condition prevails at the substation A may best be explained by reference to Fig. 41 of the drawings, which illustrates the action which occurs in the limiting amplifier tube **1131** at the output side thereof. More specifically, this figure graphically illustrates the grid voltage-plate current characteristic of the tube and generally illustrates the response of this tube to the 100 kilocycle supervisory carrier signal impressed upon the grid thereof. Referring to this figure, the voltage appearing between the lower terminal of the rectifier **1125** and ground is illustrated by the curve A whereas the voltage impressed between the control grid and cathode of the tube **1131** is illustrated by the curve B. The anode current traversing the tube in response to the voltage applied to the control grid thereof is indicated by the curve C. From an examination of these curves, it will be noted that during the first few cycles of the 100 kilocycle supervisory carrier signal passed by the rectifier **1125**, relatively heavy grid current flows through the tube **1131**. This current has the effect of charging the grid condenser **1126**, so that an operating bias for the tube **1131** is effectively built up across the condsenser. The bias voltage build up across the condenser **1126** continues until the plate current of the tube **1131** is swinging between the tube saturation value and zero. More specifically, the bias reference level is shifted by virtue of the voltage built up across the condenser **1126** until the 100 kilocycle supervisory signal swings the grid of the tube **1131** between the tube saturation value and beyond cutoff during alternate half cycles of the applied control signal voltage. This occurs regardless of the magnitude of the rectifier unblocking bias voltage developed across the resistor **1122**. Thus irrespective of the voltage developed across the resistor **1122** when an off hook condition is produced at the substation A, a condition is established in the limiting amplifier network whereby the plate current of the tube **1131** is swung between the saturation value of the tube and zero by the 100 kilocycle signal applied to the grid of the tube.

Referring more particularly to the anode current curve C as shown in Fig. 41 it will be noted that during the cycle *d–e* of the anode current swing, the plate current is a maximum at the instant *d*, such that the voltage drop across the resistor **1132** and the left portion of the potentiometer **1134** is a maximum. As a result, the left terminal of the rectifier **1138** is negative relative to the right terminal thereof. Thus the rectifier **1138** is rendered nonconductive. As the plate current through the tube **1131** drops during the period *d–f*, the voltage drop across the resistor **1132** and the left portion of the potentiometer is decreased, with the result that the anode of the tube becomes more positive to reverse the polarity of the voltage across the rectifier **1138** and thus render this rectifier conductive. Current now flows from the positive terminal of the 150 volt anode current source through the circuit elements **1134, 1132, 1133** and **1138** to charge the condenser **1139**. As anode current through the tube **1131** rises during the period *f–e*, current flow through the two resistors **1134** and **1132** increases to render the anode of the tube less positive relative to ground and thus reverse the polarity of the voltage across the rectifier **1138**. This cuts off charging current flow through the condenser **1139**. The condenser now attempts to discharge through the circuit elements **1137** and **1138**, but as explained above the back resistance of the rectifier **1138** is very high, such that only a small percentage of the charge accumulated on the condenser **1139** leaks off during the period *f–e*. During continued operation of the circuit, the described function of charging the condenser **1139** during alternate half cycles of the plate current traversing the tube **1131** continues so long as the off hook condition persists at the calling substation A. Moreover, since the swing of the anode current flow through the tube is between constant limits and repetitive at a constant 100 kilocycle rate, the voltage developed across the condenser **1139** rises to a constant value and remains set at this value within operating limits, regardless of variations in the voltage across the resistor **1122**.

When the bias voltage impressed upon the suppressor grid of the units gate tube **1323** is decreased in the manner explained in the preceding paragraphs, multiplexer pulses **84*b*** occurring in the time position **64*b*** assigned to the calling line **23** are impressed upon the multiplexer output conductor **50** to effect seizure of an idle one of the links **12, 13** and **14** in the manner generally explained above. Assuming that the link **12** is assigned to handle the call, the finder and connector portions of the link are conditioned for operation with the result that signal pulses modulated with the dial tone signal derived from the dial tone generator **29*b*** are transmitted from the calling line out gate circuit **226** of the connector **12*b*** through the gate circuits of the distributor **15** which individually correspond to the line **23**. After traversing these gate circuits, the gated pulses are impressed upon the input circuit of the tube **1204** where the signal components of the pulses are detected or reconstructed and impressed upon the control grid of the tube **1204**. The dial tone signal as amplified through the tube **1204** is impressed upon the primary winding **1200*b*** of the hybrid coil **1200** through the coupling condenser **1201**. From the secondary side of the hybrid coil **1200*a***, the dial tone signal is transmitted through the low pass filter **1114**, the coupling transformer **1111** and the rectifiers **1108** and **1109** to the line **23**. The signal is transmitted over the line **23** to the substation A where it is reproduced by the receiver **1102** to inform the calling subscriber that the dialing operation may be statred. The manner in which the hybrid system comprising the hybrid coil **1200** and the balancing network **10*a*** prevents the dial tone signal from being revertively applied to the units gate circuit of the multiplexer **11** is fully explained below.

Upon receiving the dial tone signal, the calling subscriber may actuate the calling device **1105** in accordance with the directory number designation of the desired substation. Since it is assumed that the line **32** is

being called from the substation A, the digits 3 and 2 will, of course, be successively dialed at the substation A. Operation of the calling device **1105** has the effect of pulsing the voltage across the resistor **1122** to correspondingly pulse the voltage across the condenser **1139**. More specifically, during the open circuit or break period of each dial impulse, the voltage across the resistor **1122** drops substantially to zero with the result that the condenser **1139** becomes fully discharged to increase the bias on suppressor grid of the units gate tube **1323** in the multiplexer to its normal pulse blocking value. On the other hand, during the closed circuit or make period of each dial impulse, the voltage drop across the resistor **1122** is restored to the off hook value, with the result that the condenser **1139** is charged to drop the bias on the suppressor grid of the units gate tube **1323** in the multiplexer **11** to its normal pulse gating value. Thus the dial impulses are repeated by the line circuit **10** over the conductor **53** to the multiplexer **11**. At this point, it is noted that the condenser **1126** in combination with the resistor **1130** acts as a high pass filter having a high signal rejection characteristic at frequencies of the order of 50 cycles and less and a low impedance at the supervisory signal frequency of 100 kilocycles. At the output side of the tube **1131**, the resistor **1137** and condenser **1133** also function as a high pass filter having the same characteristics as that included in the tube input circuit. The purpose of thus discriminating on a frequency basis between low frequency signals and high frequency signals is that of preventing transient, noise and induction voltages, which may appear on the line **23** and are normally of low apparent frequency, from producing changes in the voltage across the condenser **1139**. That portion of the output circuit of the tube **1131** which comprises the circuit elements **1132, 1133, 1138, 1137** and **1139** and the output impedance of the tube **1131** acts as a low pass filter to pass the dial impulses while at the same time rejecting the 100 kilocycle supervisory signal and voice signals. As a consequence, the latter signals are prevented from appearing across the condenser **1139**. Thus the limiting amplifier comprising the tube **1131** is specifically arranged to prevent low frequency noise voltages, voice signals and the 100 kilocycle signal from being reproduced across the condenser **1139** and being impressed from this condenser upon the suppressor grid of the tube **1323** in the multiplexer **11**. The spurious signal response of the line circuit **10** is further minimized through operation of the condenser **1110** to by-pass such signals to ground and thus prevent the same from substantially affecting the voltage drop across the resistor **1122**. It will be understood that the condenser **1110** also functions as an audio signal coupling condenser in coupling together the two windings **1111***a* and **1111***b* of the transformer **1111**.

As will be evident from the preceding explanation, if the called line **32** is tested in the connector **12***b* and found busy, signal pulses modulated with the busy signal are developed in the connector **12***b* and released to the line circuit **10** by the distributor **15**. On the other hand, if the called line tests idle in the connector **12***b*, such that the ringing operation is initiated, signal pulses modulated with the keyed ringback tone signal voltage developed by the circuit **29***c* are impressed upon the conductor **44***a* in the distributor **15**. These signal voltages are detected at the input side of the amplifier tube **1204**, transmitted through the line circuit **10** and over the line **23** to excite the receiver **1102** at the calling substation in the exact manner explained above with reference to the dial tone signal.

Assuming that the call is answered at the called substation B, a two-way communication channel is established between the calling and called substations. Thus voice signals originating at the substation A and transmitted over the line **23** to the line circuit **10** traverse the two primary windings **1111***a* and **1111***b* and the coupling condenser **1110** in series aiding relationship, causing a voltage to be developed across the secondary winding **1111***c* of this transformer. By reference to the simplified circuit shown in Fig. 43 of the drawings, it will be seen that a portion of the signal voltage developed across the secondary winding **1111***c* is impressed across the parallel network comprising the resistor **1144** and the rectifiers **1142** and **1143** through the winding **1200***a* of the hybrid coil **1200**. The voltage developed across the parallel connected circuit elements **1142, 1143** and **1144** is impressed upon the suppressor grid of the multiplexer tube **1323** in series with the bias voltage derived from the condenser **1139** and the 15 volt current source connected to the terminal **1113**. This signal voltage serves to modulate the multiplexer pulses gated by the multiplexer **11** in the time position **64***b* assigned to the calling line in the manner more fully explained below. In this regard, it is noted that the two parallel connected rectifiers **1142** and **1143** function as a signal amplitude limiter to prevent too great a signal voltage swing of the potential applied to the suppressor grid of the tube **1123**. Specifically, these two rectifiers function to maintain the signal input to the units gate tube **1123** of the multiplexer within the class A operating range of this tube.

As regards voice signals originating at the called substation B, it will be understood from the preceding general explanation that such signals are repeated through the multiplexer **11** and the connector **12***b* to the distributor **15**. In the distributor **15** the pulses carrying these signals are released over the conductor **44***a* to the line circuit **10**, where the voice signals are reconstructed in the input circuit of the amplifier tube **1204**. From the output side of the amplifier tube **1204** the voice signals are transmitted to the calling line **23** in the exact manner explained above with reference to the dial tone, busy tone and ringback tone signals. It is in the transmission of signals from the amplifier tube **1204** to the line **23** that the operation of the hybrid system embodied in the line circuit **10** becomes important. Specifically, this arrangement serves the function of preventing signals fed to the line circuit **10** from the distributor **15** from being revertively applied to the suppressor grid of the units gate tube **1323** in the multiplexer **11**. The manner in which such signals are prevented from being reproduced across the parallel connected circuit elements **1142, 1143** and **1144** may best be explained by reference to the equivalent circuit shown in Fig. 42 of the drawings. In the equivalent circuit there shown, the impedance **4201** represents the equivalent impedance of the transformer **1111**, the calling line **23** and the substation equipment at the substation A as seen across the terminals of the transformer secondary winding **1111***c*, and the impedance **4202** represents the series impedance of the balancing network **10***a*. In series with the equivalent impedance **4201**, an alternating current generator **4203** of zero internal impedance is illustrated to indicate a signal voltage source, i.e., signal voltages impressed upon the line circuit **10** from the line **23**. The diagonal impedance **4200** represents the suppressor grid-cathode impedance of the multiplexer tube **1323** as paralleled by the circuit elements **1142, 1143** and **1144**. The other two arms of the bridge circuit are made up of the hybrid coil windings **1200***a* and **1200***c* which have identical impedances. It is noted that the impedance value of the hybrid coil secondary winding varies as the square of the number of winding turns. Hence the series impedance of the two windings **1200***a* and **1200***c* is four times as great as the series impedance of either of the two windings **1200***a* and **1200***c* alone. Signal voltage input from the amplifier tube **1204** to the hybrid system is through the primary winding **1200***b* of the hybrid coil **1200**. This winding is shunted by the anode-cathode impedance **4205** of the amplifier tube **1204** in series with the coupling condenser **1201**, and the signal voltage input to the circuit is indi-

cated by the small series connected generator **4204** which is assumed to have zero impedance.

At frequencies within the signal frequency range handled by the line circuit **10**, the balancing circuit **10***a* is designed to have an equivalent impedance **4202** substantially equal to the equivalent impedance **4201**. More specifically, each of the equivalent impedances **4201** and **4202** has a value of approximately 600 ohms in a typical line circuit. The hybrid coil **1200** is so designed that each of its windings **1200***a* and **1200***c* has an equivalent impedance of approximately 300 ohms, such that the overall impedance of the two series connected windings is 1200 ohms. Finally, the circuit is so designed that the equivalent impedance **4200** has a value of approximately 300 ohms. Thus the impedance **4200** has a value equaling that of each of the windings **1200***a* and **1200***c* and approximately one half the value of each of the impedances **4201** and **4202**.

When a signal voltage is developed across the line **23** at the calling substation A, this voltage, as represented by the generator **4203**, is impressed upon the terminals of the equivalent impedance **4201**. The voltage across this impedance divides equally across the equivalent impedance **4200** and the hybrid coil winding **1200***c*. Thus approximately one half of the available signal voltage is impressed between the suppressor grid and cathode of the units gate tube **1323** in the multiplexer **11**. The voltage across the winding **1200***c* causes a corresponding induced voltage to be developed across the winding **1200***a* which is in phase opposition to the voltage across the equivalent impedance **4200** and is of the same magnitude. As a result, the net voltage produced across the terminals of the balancing network **10***a*, i.e., the equivalent impedance **4202**, as a result of signal voltages appearing on the line **23** is substantially zero. The described cancellation of the voltages developed across the winding **1200***a* and the impedance **4200** as a consequence of signal voltages developed on the line **23** is of importance since it helps prevent hook switch transients and other spurious voltages of high amplitude and short duration from producing large transient voltages across the terminals of the balance network **10***a* as represented by the impedance **4202** in Fig. 42. In this regard, it is noted that in order to obtain the required impedance match for satisfactory balance of the hybrid system, an iron core inductance element **1121** having a magnetically polarized core may be used in the balance network **10***a*. Further, if this element is subjected to large amplitude voltage transients the polarization of the core may be disturbed to effect the impedance characteristics of the element. However, by arranging the hybrid system in the manner disclosed herein, such transient voltages are prevented from appearing across the balancing network **10***a* and hence from affecting the polarization of the core embodied in the inductance element **1121**.

Signal voltages represented by the generator **4202** and impressed upon the line circuit **10** by way of the distributor **15** appear across the anode-cathode impedance **4205** of the tube **1204** and are impressed upon the hybrid coil primary winding **1200***b* through the coupling condenser **1201**. As explained above, these signal voltages may originate locally in the connector **12***b*, for example, occupied with the call, or may result from voice current transmission from the called substation B to the line circuit **16** over the called line **32**. In either case, the signal voltage developed across the winding **1200***b* of the hybrid coil **1200** causes in-phase voltages of equal magnitudes to be induced in the two windings **1200***a* and **1200***c*. The overall voltage across the outer terminals of these two windings is impressed across the impedance **4201** and **4202** in series. In this case, the series impedance of the two windings **1200***a* and **1200***c* is effectively 1200 ohms which effectively matches the series impedance of 1200 ohms of the two impedances **4201** and **4202**. Thus the diagonal impedance **4200** is effectively connected between two opposed terminals of a four-arm bridge circuit having like impedances of 600 ohms in each of the four arms thereof. It will be understood, therefore, that the two terminals of the diagonal impedance **4200** are maintained at the same instantaneous potential, such that no portion of the signal voltage impressed upon the circuit from the distributor **15** appears across this impedance. However, that portion of the voltage which appears across the impedance **4201** is impressed upon the line **23** to excite the receiver **1102** provided at the calling substation. It will thus be apparent that the hybrid system as embodied in the line circuit **10** is so arranged that signal voltages impressed upon the line circuit from the distributor **15** are prevented from being revertively applied to the input circuit of the units gate tube **1323** in the multiplexer **11**.

In the above explanation pertaining to the hybrid system of the line circuit **10** and its mode of operation, the effect of the low pass filter **1114** has been completely disregarded. However, and as best shown in Fig. 43 of the drawings, this filter network is included in the hybrid system in such manner as to have no appreciable effect upon the balance of the circuit. Specifically, the filter **1114** comprises two inductance elements **1115***a* and **1115***b* which are serially included in the signal current transmission path between the hybrid coil **1200** and the coupling transformer **1111** and are respectively shunted by condensers **1118** and **1119** having identical capacitance values. The shunt legs of the filter respectively comprise condensers **1116** and **1117** bridging the signal transmission channel between the hybrid coil **1200** and the coupling transformer **1111** in series with the balancing network **10***a* and having identical capacitance values. The inductance elements **1115***a* and **1115***b* are specifically designed to have identical impedance characteristics. To this end, these two elements are comprised of two windings having the same number of turns and wound side by side on a common toroidal core **1115**. Since the capacitance values of the condensers **1116** and **1118** are respectively identical with the capacitance values of the condensers **1117** and **1119**, and the two inductance elements **1115***a* and **1115***b* have identical impedance characteristics, the filter network **1114** is entirely symmetrical as viewed either from the secondary side of the coupling transformer **1111** in series with the balancing network **10***a* or the secondary side of the hybrid coil **1200**. Due to this symmetrical arrangement of the filter network, the network has no appreciable effect upon the balance of the hybrid system shown in Fig. 42 at any frequency. The constants of the circuit components making up the filter network **1114** are so chosen that this network has an upper cutoff frequency of 3.5 kilocycles. Thus, signals, pulsed or otherwise, having frequencies in excess of 3.5 kilocycles are highly attenuated through the action of this filter network. The primary purpose of providing the filter network **1114** is that of preventing signal pulses traversing the line switching components of the system and side bands of the pulse frequencies from being transmitted through the line circuit **10** to the line **23** and thence to the substation A for audible reproduction. Since the signal sampling frequency of 10 kilocycles is the most prevalent stray frequency in the entire system, it is desirable to so design the filter network **1114** that maximum signal attenuation is obtained at this particular frequency. To this end, the capacitance values of the condensers **1118** and **1119** are so chosen that the inductance elements **1115***a* and **1115***b* are tuned precisely to resonance at the 10 kilocycle signal sampling frequency. Since the filter network **1114** has an upper cutoff frequency of 3.5 kilocycles, it also functions to suppress most of the predominant side bands of the fundamental signal sampling frequency.

In considering the operation of the ringing control facilities of the line circuit **10** on a call routed to this line circuit and the associated line **23** from another line of the system, it is pointed out above that normally the

crystal rectifier **1216** is biased against current conduction so that the keyed ringing control signal impressed upon the common conductor **38** by the circuits **26** and **27** is prevented from reaching the grid of the gas filled tube **1208**. Specifically, the positive potential impressed upon the left terminal of the rectifier **1216** through the resistor **1213** from the potentiometer **1214** is substantially greater than the voltage across the condenser **1219** both when the amplifier tube **1204** is inactive and when this tube is operating as a voice, dial tone, busy tone or ringback tone signal amplifier tube. With the rectifier **1216** thus biased to prevent the keyed 100 kilocycle ringing control signal from reaching the grid of the tube **1208**, this grid and the cathode of the tube float together at a potential which is above ground potential by an amount equal to the 90 volts of the direct current source **2579** plus or minus the alternating ringing voltage which appears across the secondary winding of the ringing current transformer **2578**. This ringing voltage has an R.M.S. value of approximately 90 volts. Normally, the grid of the tube **1208** is biased a few volts negative with respect to the cathode of the tube in a local biasing circuit which includes the bias potential source **2580**, the resistor **1215***a*, the potentiometer **1215** and the inductance element **1211**. More specifically, an adjustable portion of the voltage appearing across the potentiometer **1215** is negatively applied to the control grid of the tube **1208** through the inductance element **1211**.

Another special feature of the ringing control facilities is the arrangement whereby the alternating voltage appearing across the secondary winding of the ringing transformer **2578** is prevented from firing the tube **1208** in the absence of a start ring bias potential on the conductor *44a*. In this connection it will be noted that the circuit elements **1212**, **1213** and **1214** effectively constitute a parallel path to ground for the ringing current. Thus these components are connected in series with the inductance element **1211**, the resistors **1215***a* and the potentiometer **1215** across the secondary winding of the transformer winding **2578** and the direct current source **2579**, so that the alternating ringing voltage appearing across the transformer secondary winding may cause current flow through the inductance element **1211** to produce a voltage difference between the cathode and control grid of the tube **1208**. However, the condenser **1212** is characterized by a low capacitance value, such that it has practically infinite impedance at the low ringing frequency of 20 cycles. Presence of this condenser in the series circuit just described limits ringing current flow over the circuit to such a low value that the voltage drop across the low impedance inductance element **1211** cannot produce inadvertent firing of the tube **1208**.

When the line circuit **10** is seized on a call incoming to the line **23** from another line of the system, such, for example, as from the line **32**, pulses of large amplitude and negative polarity are impressed upon the input circuit of the amplifier tube **1204** over the conductor *44a* from the distributor **15**. These pulses have an amplitude approximately 50 percent greater than the maximum amplitude of pulses released by the distributor which may be modulated with any voice, dial tone, busy tone or ringback tone signal. When start ring pulses are thus impressed upon the input circuit of the tube **1204**, anode current flow through the tube is sharply decreased to correspondingly decrease the voltage drop across the resistor **1202**. As a consequence, the condenser **1219** is charged to a higher voltage through the series connected resistors **1202** and **1203**. This increase in the voltage across the condenser **1219** results in a polarity reversal of the voltage across the crystal rectifier **1216**, thereby to render this rectifier conductive. In this regard, it is noted that the resistor **1217**, which interconnects the right terminal of the rectifier **1216** with the upper positive terminal of the condenser **1219**, acts as an isolating resistor to prevent the 100 kilocycle ringing control carrier from being impressed upon the primary winding **1200***b* of the hybrid coil **1200**.

When the rectifier **1216** is rendered conductive in the manner just explained, the keyed 100 kilocycle ringing control carrier applied to the conductor **38** in the ringing keying circuit **27** is impressed upon the control grid of the tube **1208** over a path which includes this rectifier and the two coupling condensers **1212** and **1218**. In this regard, it is noted that the impedance of the condenser **1212** at the high frequency of the ringing control signal is relatively low as compared with the impedance of the resistor **1213** and the potentiometer **1214**. Also, the impedance of the inductance element **1211** is very high at the 100 kilocycle frequency of the ringing control signal. Thus the presence of the shunt connected elements **1211** and **1213** does not prevent the keyed 100 kilocycle ringing control signal from being impressed between the control grid and cathode of the tube **1208**. During alternate half cycles of the ringing control signal passed by the rectifier **1216**, the tube **1208** is fired. Ringing current transmission to the called substation A is initiated immediately the tube **1208** is fired. As previously pointed out, the ringing voltage actually comprises the 20 cycle alternating voltage developed across the secondary winding of the transformer **2578** as superimposed upon the voltage of the direct current source **2579**. This source has a voltage of approximately 80 volts. The circuit traversed by the ringing current extends from the upper terminal of the secondary winding of the transformer **2578** by way of the conductor **61***a*, the ionized space current path through the tube **1208**, the lower conductor of the line **23**, the gas filled tube **1107**, the windings of the ringer **1106**, the impulsing contacts of the calling device **1105**, the upper conductor of the line **23**, the rectifier **1108** and the winding **1111***a* of the transformer **1111** to the grounded terminal of the current source **2579**. In this regard, it is noted that the neon tube **1107** is instantaneously fired by the ringing voltage impressed upon the line **23** in response to firing of the ringing control tube **1208**. After the two tubes **1107** and **1208** are fired, ringing current traversal of the above-traced circuit produces a voltage drop across the tube **1208** of approximately 8 volts and a voltage drop across the tube **1107** of approximately 60 volts. The balance of the available voltage, which varies from zero to 170 volts positive R.M.S., appears across the remaining components of the circuit traversed by the ringing current. It will thus be apparent that most of the available 80 volts of the direct current source **2579** is dissipated across the tubes **1107** and **1208**. As a consequence, the cathode of the tube **1208** is driven positive relative to the anode of this tube during a portion of each alternate half cycle of the ringing voltage appearing across the secondary winding of the transformer **2578**. Hence, but for the continued excitation of the grid of the tube **1208** by the 100 kilocycle ringing control signal in the manner explained above, this tube would be extinguished at some point during one half of each cycle of the ringing voltage. During the silent period of each ringing cycle when the 100 kilocycle ringing control signal is removed from the conductor **38**, the tube **1208** is deionized during the first cycle of the ringing voltage next following interruption of the ringing control signal when the cathode of the tube **1208** is driven positive relative to the tube anode. However, ringing current transmission over the line **23** is obviously resumed at the start of each ringing interval of each ringing cycle in response to reapplication of the ringing control signal to the conductor **38**.

When the call is answered at the substation A through removal of the receiver **1102** or hand set from its supporting hook or cradle, the limiting amplifier network functions in the manner explained above to build up a voltage across the condenser **1139** which results in the transmission of multiplexer pulses occurring in the time

position 64*b* assigned to the line 23 through the multiplexer 11 to the connector occupied with the call. The connector and more particularly the called line in gate circuit 223 and the called line reconstructor circuit 222 embodied therein respond to these multiplexer pulses by operating the ring trip circuit 221 of the connector to terminate the start ring signal being impressed upon the conductor 44*a* in the distributor 15. More specifically, the amplitude of the negative pulses applied to the conductor 44*a* in the distributor 15 is reduced to the normal operating level. As a consequence, the voltage drop across the resistor 1202 is sharply increased and the condenser 1219 is caused to discharge through the resistor 1203 and the space current path of the tube 1204. After the condenser 1219 has discharged down to its normal charge level, the voltage thereacross becomes less than the voltage applied to the left terminal of the rectifier 1216 through the resistor 1213. Thus the polarity of the voltage across the rectifier 1216 is reversed to bias this rectifier against transmission of the ringing control signal therethrough to the control grid of the tube 1208. When the ringing control signal is thus removed from the grid of the tube 1208, this tube is deionized to terminate the ringing operation in a manner which will be fully apparent from the preceding explanation.

The manner in which the line circuit 10 functions to transmit voice signals in both directions between the substation A and a calling substation on calls incoming to the line 23 is exactly the same as explained above with reference to the call originating at the substation A and routed to the substation B. In this connection, it is emphasized that the magnitude of the voltage changes produced at the anode of the tube 1204 in response to voice signal excitation of the control grid of this tube is insufficient to cause unblocking of the rectifier 1216. In other words, the ringing response of the line circuit 10 is on a marginal basis, a much larger bias voltage being required on the control grid of the tube 1204 to initiate the ringing operation than any signal voltage which may be impressed on the grid as a consequence of supervisory or voice signal input to the tube 1204 over the conductor 44*a* from the distributor 15. Moreover, the resistor 1203 and condenser 1219 acts as a low pass filter to prevent voice signals from being impressed upon the rectifier 1216 to any appreciable extent.

It is believed that the manner in which the line circuit 10 is released when the receiver 1102 or hand set at the substation A is replaced upon its supporting hook or cradle to terminate a call will be readily apparent from the preceding explanation. Briefly summarized, however, it is repeated that the system is arranged for calling party release of the finder-connector links embodied in the system. Accordingly, if the link 12, for example, is occupied with a call originated at the substation A, the charge across the condenser 1139 is rapidly dissipated through removal of the 100 kilocycle supervisory signal from the grid of the limiting amplifier tube 1131 when the calling subscriber at the substation A hangs up to terminate the call. When the charge across the condenser 1139 is dissipated, the units gate tube 1323 of the multiplexer 11 is biased to interrupt the transmission of multiplexer pulses to the finder 12*a* of the link occupied with the call. As a consequence, the link is released in the manner previously explained so that even though the called subscriber attempts to hang on to the connection, signal pulses cannot be impressed upon the control grid of the tube 1204 over the conductor 44*a* by the distributor 15. In a similar manner, the limiting amplifier network comprising the tube 1131 functions to dissipate the charge across the condenser 1139 on a call incoming to the line 23 when the called subscriber at the substation A hangs up to terminate the call. Here also, the units gate tube 1323 of the multiplexer 11 is biased against multiplexer pulse transmission over the conductor 50 to the link occupied with the call when the charge on the condenser 1139 is dissipated. It will thus be understood that regardless of whether a call originates at the substation A or is routed to this substation from another substation of the system, the units gate circuit of the multiplexer 11 is automatically blocked against multiplexer pulse transmission over the multiplexer output conductor 50 in the time position 64*b* assigned to the line 23 when the subscriber at the substation A hangs up to terminate the call.

Multiplexer 11

As pointed out in the general description of the system, this circuit, the details of which are illustrated in Figs. 13 and 14 of the drawings, is provided for the general purpose of sampling control and intelligence signals developed on calling and called lines of the system in the time positions of each pulse frame individually assigned to the lines from which the signals are respectively derived, and for transmitting multiplexer pulses modulated with the sampled control or intelligence signals over the multiplexer output conductor 50 to the finder connector links 12, 13 and 14. The circuit is capable of sampling signals appearing on each of the 100 lines of the system at a sampling repetition rate of 10 kilocycles. Generally considered, the multiplexer 11 comprises 100 units gate circuits which are individually associated with the lines of the system and each of which includes a units gate tube. Specifically, the units gate circuits individually associated with the lines assigned the directory number designations 11, 12, 13—10 respectively comprise the ten units gate tubes 1311, 1312, 1313—1310 of the upper horizontal tube row. Similarly, the units gate circuits respectively associated with the lines of the system having the directory number designations 21, 22, 23—20 individually include the units gate tubes 1321, 1322, 1323—1320 of the second horizontal tube row, and the units gate circuits which are individually associated with the lines having the directory number designations 31, 32, 33—30 individually comprise the units gate tube 1331, 1332, 1333—1330 forming the third horizontal tube row. Finally, the units gate circuits comprising the units gates tubes 1301, 1302, 1303—1300 forming the tenth horizontal tube row are individually associated with the lines having the directory number designations 01, 02, 03—00. Each of the ten horizontal strings of units gate tubes has a pulse inverter tube and a tens gate tube individually associated therewith. Thus four inverter tubes 1411, 1421, 1431 and 1401 having tens gate tubes 1410, 1420, 1430 and 1400 individually connected in tandem therewith are interconnected on an individual basis with the four illustrated strings of units gate tubes. In addition, the multiplexer 11 comprises a master inverter tube 1470 and a cathode follower tube 1480 connected in tandem in the order named. The cathode follower tube 1480 constitutes the output tube of the multiplexer and is provided with a cathode load circuit to which the multiplexer output conductor 50 is connected. Each of the identified tens and units gate tubes is preferably a pentode of the 6AS6 commercial type. Pentodes of the 6AK6 type are preferably used as the inventer tubes 1411, 1421, 1431—1401. The master inventer tube 1470 is preferably a pentode of the 6AG7 type, whereas the cathode follower 1480 preferably comprises one half section of a 6AS7 twin triode. The various circuit elements employed to interconnect the identified tubes of the multiplexer 11 are specifically referred to below in describing the functions which they respectively perform in the multiplexer circuit.

Operation of the multiplexer 11 is under the joint control of the 100 line circuits of the system, the channel pulse commutator 22 and the tens pulse ring circuit 21. More specifically, channel pulses 82*a*, 82*b*, 82*c*, etc., of each pulse frame as shown in the pulse chart of Figs. 37 to 40, inclusive, are delivered to the control

grids of the No. 1 units gate tubes of the ten horizontal strings in parallel over a path which includes the multiplexer channel pulse conductor 34*a* and the condenser **1351**. Similarly, the multiplexer channel pulses 83*a*, 83*b*, 83*c*, etc., of each pulse frame are impressed upon the inner control grids of the No. 2 tubes of each units gate tube string over a path which includes the second multiplexer channel conductor 34*b* and the condenser **1352**. In an entirely similar manner, the multiplexer channel pulses 84*a*, 84*b*, 84*c*, etc., of each pulse frame are impressed upon the inner control grids of the No. 3 tubes of the ten units gate tube strings in parallel over a path which includes the third channel pulse conductor 34*c* and the condenser 1353. The fourth to tenth units gate tubes of the ten units gate tube strings are similarly excited in parallel on a numerical basis over the seven other channel pulse conductors 34*d*, 34*e*–34*j*, the tenth conductor 34*j* being coupled to the parallel connected control grids of the No. 10 tubes of each of the ten units gate tube strings through a condenser **1350**. As previously indicated, the suppressor grids of the units gate tubes are respectively connected to the line circuits terminating the lines individually associated with these tubes. Thus, the suppressor grid of the units gate tube **1323** is connected over the conductor 53 to the line circuit **10** in the manner explained above with reference to this line circuit. Similarly, the suppressor grid of the units gate tube 1332 individually associated with the line **32** is connected by way of the conductor 45 to the line circuit **16** which terminates the line 32.

From the above explanation it will be understood that channel pulses are successively impressed upon the inner control grids of the first to tenth tubes of each of the tens units gate tube strings ten times during each pulse frame, i.e., at a 100 kilocycle rate. However, each units gate tube is normally biased against channel pulse transmission therethrough by the negative bias voltage impressed upon the suppressor grid thereof from the respective associated line circuit. When the line circuit associated with one of the units gate tubes is taken into use, however, the suppressor grid bias potential of the tube is lowered precisely to the value at which class A operation of the tube is obtained. When the suppressor grid bias of the tube is thus lowered, channel pulses modulated in accordance with signal energy impressed upon the suppressor grid from the associated line circuit are developed at the anode of the tube and transmitted to the input electrodes of the associated one of the ten inverter tubes **1411**, **1421**, **1431**—**1401**. Thus those signal modulated channel pulses which are developed at the anodes of the units gate tubes in the top horizontal string are impressed upon the control grid of the invertor tube **1411** through the coupling condenser **1413**. The inverter tubes perform the function of amplifying the signal modulated multiplexer channel pulses impressed upon the control grids thereof and of repeating the same to the suppressor grids of the respective associated tens gate tubes. Thus amplifier signal modulated multiplexer channel pulses developed at the anode of the inverter tube **1411** are impressed upon the suppressor grid of the associated tens gate tube **1410** through the coupling condenser **1416**. Positive tens pulses successively impressed upon the positive tens pulse conductors **32***a*, **32***b*–**32***j* during each pulse frame are utilized successively to unbias the tens gate tubes **1410**, **1420**, **1430**—**1400** during successive tens pulse intervals of each pulse frame. Specifically, the first positive tens pulse **72***a* of each pulse frame is impressed upon the inner control grid of the tens gate tube **1410** associated with the first group of ten lines over a path which includes the tens pulse conductor **32***a* and the coupling condenser **1442**. Similarly, the second tens pulse 73*a* of the each pulse frame is impressed upon the inner control grid of the second tens gate tube **1420** individual to the second group of ten lines over a path which includes the positive tens pulse conductor **32***b* and the condenser **1452**. The inner control grid of the third tens gate tube **1430**, which individually corresponds to the third group of ten lines, is excited by the third tens pulse 74*a* of each pulse frame over a path which includes the positive tens pulse conductor **32***c* and the coupling condenser **1462**. The inner control grids of the fourth to ninth tens gate tubes, not shown, are similarly excited over the positive tens pulse conductors **32***d*–**31***i* during the respective fourth to tenth tens pulse periods of each pulse frame. Finally, the inner control grid of the tenth tens gate tube **1400**, which individually corresponds ot the tenth group of ten lines, is excited by the tenth and last positive tens pulse of each pulse frame, as transmitted thereto over a path which includes the positive tens pulse conductor **32***j*. It will thus be understood that positive tens pulses are successively impressed upon the inner controls grids of the ten tens gate tubes **1410**, **1420**, **1430**—**1400** during successive tens pulse periods of each pulse frame. Each of these tubes is only operative to repeat signal modulated channel pulses therethrough during those intervals when positive tens pulses are present **1472**. The pulses receive tremendous amplication through the inverter tube **1470** and are each inverted from a negative polarity to a positive polarity through the tube **1470**. As positively reproduced at the anode of the tube **1470**, the pulses are impressed upon the control grid of the cathode follower tube **1480** through a network which includes the parallel connected inductance and resistance elements **1477** and **1478** respectively and the coupling condenser **1479**. The pulses are reproduced across the cathode load circuit of the tube **1480**. This load circuit comprises a coaxial cable **1436**, which actually extends to each of the finders and connectors of the system and terminates in a load resistance **1487**. More specifically, the cathode of the tube **1480** is connected to the multiplexer output conductor **50**, which forms the inner conductor of the cable **1486**, whereas the outer sheath of this cable is connected to ground. The cable **1486** is terminated in its characteristic impedance having a value of approximately 72 ohms.

Referring now more particularly to the mode of operation of the multiplexer **11** to repeat signal samples derived from the line circuit **10** to the multiplexer output conductor **50** in the above-described call originating at the substation A and routed to the substation B, it will be understood that when the line **10** is taken into use, the limiting amplifier network of the line circuit **10** functions to reduce the bias potential impressed upon the suppressor grid of the units gate tube **1323** over the conductor **53** to a value at which class A amplifier operation of this tube is obtained. Immediately this bias potential level is established on the suppressor grid of the tube **1323**, channel pulses impressed upon the channel pulse conductor 34*c* and by way of this conductor and the condenser **1353** upon the inner control grid of the tube **1323** are repeated through this tube and the condenser **1423** to the control grid of the inventer tube **1421**. These pulses are, of course, modulated in amplitude in accordance with the intelligence or control signal impressed upon the suppressor grid of the tube **1323** in the manner explained above. They are repeated as negative pulses to the control grid of the inverter tube **1421**, which functions to amplify and invert the same so that they are impressed upon the suppressor grid of the tens gate tube **1420** as positive pulses. These pulses recur ten times during each pulse frame. However, due to the commutating action of the tens gate tubes, the tube **1420** is only rendered effective to repeat one of the ten pulses derived from the tube **1323** during each pulse frame to the output side thereof. Thus, the tens gate tube **1420** only passes that signal bearing multiplexer channel pulse which occurs coincidentally with the application of a positive tens pulse to the inner control grid thereof during each pulse frame. Specifically, the signal modulated channel pulse

84*b* occurring in the time position 64*b* assigned to the line 23 is the only pulse passed by the tens gate tube 1420 during each pulse frame. This pulse is reproduced as a negative pulse at the anode of the tube 1420 and is impressed upon the control grid of the master inverter tube 1470 through the coupling condenser 1472. From this point, the pulse, still modulated with the signal sample derived from the line circuit 10, is repeated through the tubes 1470 and 1480 to the multiplexer output conductor 50 in the manner explained above.

As explained in the description pertaining to the line circuit 10, the audio signal input to the suppressor grid of the units gate tube 1323 is carefully limited in the line circuit by the rectifiers 1142 and 1143 to maintain the signal voltage swing within the three volts class A operating range of the tube. This prevents distortion of the sample signal in the operation of the tube 1323 to repeat the signal to the inverter tube 1421. During dialing at the calling substation A, the bias potential level on the suppressor grid of the tube 1323 rises to its normal channel pulse blocking value during the open circuit or break-period of each dial impulse, thereby to stop the transmission channel pulses over the conductor 50 in the time position 64*b*. However, during the closed circuit or make period of each dial impulse, channel pulse transmission over the conductor 50 in the time position 64*b* is resumed.

The manner in which the units gate tube 1332, the inverter tube 1431 and the tens gate tube 1430 are controlled to repeat signal samples derived from the line circuit 16 over the conductor 50 in the time position assigned to the called line 32 when the above-described call is answered at the called substation will be fully apparent from the preceding explanation. From this explanation, it will also be apparent that the multiplexer 11 is arranged to sample signals derived from the 100 line circuits of the system on a decimal basis. This is accomplished by the described method of double multiplexing, employing high speed sampling at the units gate tubes, followed by slow speed sampling at the ten gate tubes at one tenth the units gate sampling speed. This arrangement has the important advantage of eliminating the necessity for providing ring circuits in the common equipment having 100 stages, i.e., stages equal in number to the number of lines in the system. The arrangement is of even more importance when the described system of multiplexing is expanded to accommodate the requirements of exchanges having more than 100 lines. The arrangement also has the important advantage of eliminating the necessity for carrying 100 or more pulse bus conductors throughout the exchange. Thus the multiplexer 11 has only a single output conductor, namely the conductor 50.

One of the difficult problems solved in the development of the multiplexer 11 was that of preventing distortion of the signal modulated multiplexer pulses and of preventing cross talk between the pulses occurring in different time positions of each pulse frame. In this regard, it is noted that variations in the amplitude of the channel pulses 82, 83, 84, etc., delivered to the control grids of the units gate tubes has the effect of distorting the signal samples transmitted through the system. More important, if the amplitude of the channel pulses applied to the inner control grid of any units gate tube is allowed to vary at an audio frequency rate, secondary modulation of the pulses results. This is highly undesirable since any such secondary modulation components are audibly reproduced at the substation to which the signals are ultimately transmitted. In order to prevent variations in the amplitude of the channel pulses impressed upon the control grids of the units gate tubes from affecting the amplitude of the pulses gated by these tubes, amplitude clamping circuits are provided between each of the multiplexer channel pulse conductors 34, 34*b*, 34*c*–34*j* and the control grids of the respective associated units gate tubes. This clamping circuit as provided between the channel pulse conductor 34*a* and the No. 1 gate tube of each of the ten units gate tube strings comprises the condenser 1351 and a crystal rectifier 1341. Similar clamping circuits will be readily identified in association with each of the three other illustrated channel pulse conductors 34*b*, 34*c* and 34*j*. In considering the operation of the clamping circuit comprising elements 1351 and 1341, it is noted that as seen by the multiplexer, the pulses appearing on the conductor 34*a* start at a negative value and rise toward ground potential. The rectifier 1341 is so poled that so long as the pulse amplitude does not exceed ground potential this rectifier is non-conductive. However, if the pulse amplitude rises above ground potential, the rectifier 1341 becomes conductive, permitting the condenser 1351 to charge and develop a voltage thereacross which is thereafter subtracted from the channel pulse amplitude as seen by the units gate tubes 1311, 1321, 1331—1301. Thus the voltage developed across the condenser 1351 effectively reduces the amplitude of the channel pulses applied to the control grids of the No. 1 units gate tubes 1311, 1321, 1331—1301 of the ten tube strings. The condenser 1351 holds its charge indefinitely so long as the pulse amplitude remains excessive and tends to vary up and down as the channel pulse amplitudes vary in reverse manner. In other words, the voltage developed through charging of the condenser 1351 varies inversely in accordance with variations in the pulse amplitude above ground potential, thereby to maintain substantially constant the amplitude of the pulses applied to the control grids of the No. 1 gate tubes in the ten units gate tube strings.

One exceedingly important feature of the multiplexer 11 which is incorporated therein to minimize cross talk of the channel pulses gated by the multiplexer in the different time positions assigned to the different lines is that of employing the inner control grid of each of the tens and units gating tubes as the pulse gating grid and of using the suppressor grid of each tens and units gating tube as the signal excited control grid of the tube. To illustrate the importance of this feature it is pointed out that if instead of this arrangement the suppressor of the tube 1323, for example, were used as the pulse gating grid, i.e., were excited by the channel pulses, it would only cut off electron flow from the anode of the tube to the tube cathode and would not cut off electron flow from the screen electrode of the tube to the cathode during each off pulse period. In such case, the inner control grid of the tube 1323 would of necessity be used as the signal excited grid of the tube. This grid would still be free to vary the electron flow between the screen grid and the cathode, with the result that signal controlled variations in screen current flow through the tube would be produced which would manifest themselves as variations in the potentials applied to the screen electrodes of the other tens and units gating tubes of the multiplexer. Thus the signal voltage introduced into the tube 1323 could be transferred to the output circuits of the other gating tubes by means of screen control of the electron streams in the other gating tubes. However, by using the inner control grid of each gate tube as the pulse gating grid, electron flow to both the screen and anode electrodes of the tube is positively cut off during each off pulse period. Thus, cross talk between the signal bearing channel pulses as a consequence of screen electrode control of the electron streams in the gating tubes is positively prevented.

Another important feature of the multiplexer 11, also provided for the purpose of minimizing cross talk between the signal modulated channel pulses gated by the circuit in different time positions is that of operating the screen electrodes of the tens and units gating tubes at relatively low potentials which will not cause these electrodes to heat up and act as electron emitters to the tube

anodes. This is accomplished by providing voltage dropping resistors between the 150 volts anode current source and the screen electrode of each of the gating tubes. Thus the voltage dropping resistor **1323***b* is provided in the screen electrode circuit of the tube **1323** to drop the voltage of the anode current source to a value of approximately 120 volts, which is the rated screen operating voltage of tubes of the 6AS6 type. Further to minimize signal frequency variations in the potentials on the screen electrodes of the gating tubes, each such electrode is by-passed to ground at signal frequencies through a suitable by-pass condenser. Thus, a by-pass condenser **1323***a* is connected between the screen electrode of the tube **1323** and ground to minimize signal frequency variations in the screen electrode potentials.

Another important feature of the multiplexer **11** is that of providing a voltage clamping crystal rectifier in shunt with the control grid and cathode of each of the inverter tubes **1411, 1421, 1431—1401** to eliminate what may be referred to as forward cross talk between the signal modulated channel pulses handled by these tubes. These clamping rectifiers are indicated at **1412, 1422, 1432** and **1402** in individual association with the four illustrated inverter tubes **1411, 1421, 1431** and **1401**. To illustrate the manner in which such cross talk may occur, it is noted that if the condenser **1423**, for example, is charged by a pulse delivered thereto from the tube **1323**, for example, and is not discharged prior to the reception of a succeeding pulse from the tube **1320** or the tube **1321**, for example, then the succeeding pulse is altered in amplitude by an amount equal to the voltage across the charged coupling condenser **1423**. This obviously results in amplitude distortion of the succeeding pulse, is referred to as forward cross talk, and would occur if a coupling resistor were used in lieu of the rectifier **1422**. This type of cross talk or signal pulse distortion is substantially obviated by employing the clamping rectifier **1422**, for example, instead of a conventional coupling resistor. Thus during gating of a particular channel pulse from the tube **1323** to the tube **1421**, the condenser **1423** is only slightly charged during the rising portion of the pulse through the high back resistance of approximately one megohm of the rectifier **1422**. Moreover, the charging action occurs at a very slow rate determined by the time constant of the series connected elements **1422** and **1423**. During the following part of the pulse, the charge on the condenser **1423** is immediately reversed so that after the pulse ends only a small residual charge remains on the condenser. The polarity of this charge is such that the condenser can immediately discharge through the low forward resistance of the rectifier **1422**. The forward resistance of the rectifier **1422** is of the order of 90 ohms. Thus the condenser discharge path has a very short time constant, such that the charge on the condenser **1423** is effectively dissipated before the next signal pulse can arrive from another units gate tube, such as the tube **1320**. The described amplitude clamping arrangement is also used ahead of each of the tens gate tubes **1410, 1020, 1430—1400**, the master inverter tube **1470** and the cathode follower tube **1480**. Thus, clamping crystal rectifiers **1417, 1427** and **1437** are respectively used in the coupling circuits between the anodes of the tubes **1411, 1421** and **1431** and the suppressor grids of the tubes **1410, 1420** and **1430**. Similarly, a clamping crystal rectifier **1473** is provided in shunt with the control grid and cathode of the master inverter tube **1470**. At the input side of the cathode follower tube **1480**, two series connected clamping crystal rectifiers **1482** and **1483** are required. Provision of the described amplitude clamping facilities at the input sides of the master inverter tube **1470** and the cathode follower tube **1480** is of the utmost importance since these tubes may be called upon to handle signal modulated multiplexer channel pulses occurring at a 100 kilocycle rate.

Another special feature of the multiplexer **11** is that of providing the parallel network comprising the inductance element **1477** and resistor **1478** in the coupling circuit between the master inverter tube **1470** and the cathode follower tube **1480**. This network performs the function of neutralizing stray capacitances in the circuit as well as the high input capacitance of the cathode follower tube **1480**. Such capacitance neutralization has the effect of preventing excessive attenuation of the signal pulses. In other words, this network acts to raise the response characteristic of the inverter tube **1470** at the high frequency end of the signal transmission band which the tube is required to handle.

Finder 12a

As previously explained in connection with Fig. 2A of the drawings, this finder generally comprises a pulse input circuit **200**, a +B switching circuit **201**, a pulse combining circuit **202**, a tens coincidence tube circuit **203**, a units coincidence tube circuit **204** and a finder pulse forming circuit **205**. The functions performed by this circuit and the identified components thereof are also generally explained above with reference to the same figure of the drawings. Referring now more particularly to Figs. 15 and 16 of the drawings, wherein the detailed circuitry of the finder **12***a* is illustrated, it will be seen that the pulse input circuit **200** comprises a finder control gate tube **1508**, an inverter tube **1509** and a cathode follower tube **1510** connected in tandem in the order named and arranged to impress pulses gated therethrough upon a common conductor **1502**. These pulses are distributed over the conductor **1502** to the input terminals of the tens coincidence tube circuit **203**, the units coincidence tube circuit **204** and the +B switching circuit **201** in parallel. The +B switching circuit **201** comprises a +B switch tube **1523**, a +B switch timing tube **1511** and a +B switch extinguishing tube **1516** interconnected in the manner illustrated. This circuit is controlled solely by pulses gated thereto from the pulse input circuit **200**. The tens coincidence tube circuit **203** comprises ten gate control tubes, the first, second, third and tenth of which are indicated at **1610, 1620, 1630** and **1600** in horizontal alignment in Fig. 16 of the drawings. These gate control tubes have individually associated therewith tens pulse gating crystal rectifiers **1610***b*, **1620***b*, **1630***b*—**1600***b* and are arranged to be jointly controlled by pulses delivered thereto from the pulse input circuit **200** over the conductor **1502** and negative tens pulses successively transmitted thereto over the negative tens pulse conductors **33***a*, **33***b*, **33***c*—**33***j* from the tens pulse ring circuit **21**. Pulses gated by the tens coincidence tube circuit **203** are impressed upon the finder pulse forming circuit over a path which includes the conductor **1664** and a coupling condenser **1558**. Similarly, the units coincidence tube circuit comprises ten gate control tubes of which the first, second, third and tenth tubes **1641, 1642, 1643** and **1640** are illustrated in horizontal alignment in the lower half of Fig. 16. These tubes have pulse gating crystal rectifiers **1641***b*, **1642***b*, **1643***b* and **1640***b* individually interconnected therewith. They are arranged to be jointly controlled by pulses delivered thereto over the conductor **1502** from the pulse input circuit **200**, and negative units pulses successively transmitted thereto over the units pulse conductors **30***a*, **30***b*, **30***c*–**30***j* from the units pulse ring circuit **20**. Pulses gated by the units coincidence tube circuit **204** are transmitted to the finder pulse forming circuit **205** over a path which includes the conductor **1663** and a coupling condenser **1557**. The finder pulse forming circuit **205** comprises a pulse forming tube **1528**, a pulse clipping tube **1531** and a pulse inverter tube **1533** connected in tandem in the order named. As shown, the pulse forming circuit **205** is controlled solely

by pulses gated thereto from the two coincidence tube circuits **203** and **204**. Pulses developed at the output side of this circuit are impressed upon the pulse combining circuit **202** over two paths which respectively comprise the coupling condensers **1534** and **1568**. The pulse combining circuit **202** comprises a cathode follower tube **1500** and a pulse mixer tube **1501**, both of which are arranged to be controlled by the finder pulse forming circuit **205**. The tube **1501** is also arranged to respond to busy pulses transmitted thereto over the busy pulse conductor **52** from the other finders and connectors of the system. This circuit functions to gate busy and finder gate pulses to the conductors **52** and **12*d*** respectively when the finder **12*a*** is operatively associated with a calling line. Circuit elements not specifically mentioned in the above description of the finder **12*a*** are referred to below in describing the functions which they respectively perform in the finder circuit. All gas filled tubes embodied in the finder **12*a***, namely the ten tubes of the tens coincidence tube circuit **203**, the ten tubes of the units coincidence tube circuit **204** and the three tubes of the +B switching circuit **201** are highly sensitive thyratrons, preferably of the RCA commercial type 5696. The three twin triode tubes **1501**, **1510** and **1528** embodied in the finder are preferably of the commercial 6J6 type. The triodes **1500**, **1509** and **1533** are preferably of the commercial 6C4 type, while the pentode **1508** employed as the finder control gate tube is preferably of the 6AS6 type. Finally, the tube **1531** employed as the pulse clipping tube in the pulse forming circuit **205** is preferably of the commercial 6AQ6 type.

In considering the operational details of the finder **12*a***, it is first pointed out that when the finder is idle, all tubes embodied in the circuits **203**, **204** and **201** are deionized. With these circuits thus rendered inactive, the pulse forming circuit **205** and pulse combining circuit **202** are likewise maintained in an inactive condition. Moreover, with the +B switching circuit **201** inactive, the connector **12*b*** is likewise inactive. So long as a positive allotter pulse is not impressed upon the screen grid of the control gate tube **1508** over the allotter conductor **36*a*** from the link allotter **24**, space current cannot flow through the tube **1508** even when multiplexer pulses are present. In addition, the presence of a busy pulse on the busy pulse conductor **50** in the time position corresponding to that of the calling line multiplexer pulse will be so applied to the suppressor grid of the gate tube **1508** that current flow through this tube is cut off even though a positive allotter pulse may be present on the screen grid of the tube and a positive multiplexer pulse may be coincidentally applied to the control grid of the tube through the condenser **1507** from the multiplexer output conductor **50**. It will thus be apparent that the tube **1508** is rendered operative to gate positive multiplexer pulses appearing on the conductor **50** only when an allotter pulse is present on the allotter conductor **36*a*** and only when busy pulses are not present on the busy pulse conductor **50** in the time positions respectively corresponding to the multiplexer pulses.

Operational details of the finder **12*a*** may best be explained with reference to the functions performed by this finder in handling the above described call originating at the substation A and routed to the substation B. In this regard, it will be recalled from the above description of the multiplexer **11** that when the call is initiated on the line **23** serving the substation A, multiplexer pulses appearing in the time position **64*b*** assigned to the calling line **23** and modulated with signals derived from this line are transmitted from the multiplexer **11** over the multiplexer output conductor **50** to each of the finders and connectors of the system. It will also be understood that if such multiplexer pulse transmission over the conductor **50** starts during an interval when an allotter pulse is not impressed upon the conductor **36*a*** in the allotter **24**, the link **12** cannot handle the call and hence will not be operatively associated with the calling line. Assume, however, that the transmission of multiplexer pulses over the conductor **50** in the time position **64*b*** starts during an interval when a positive allotter pulse is present on the conductor **36*a***. This allotter pulse is employed to raise the potential of the screen electrode in the control gate tube **1508** to its normal operating level to permit space current flow through the tube providing the potentials on the other electrodes of the tube have the proper values.

With operating screen potential thus supplied to the tube **1508**, the pulses occurring on the conductor **50** in the time position **64*b*** assigned to the calling line **23** are gated by the tube **1508** through the coupling condenser **1512** to the control grid of the inverter tube **1509**. More specifically, the positive multiplexer pulses are impressed upon the control grid of the tube **1508** through the coupling condenser **1507** and each thereof opposes the negative bias normally applied to this control grid through the resistor **1506** and the crystal rectifier **1505**. These pulses are prevented from driving the control grid of the tube **1508** substantially above ground potential through proper choice of the negative bias potential across the resistor **1506**. The pulses impressed upon the control grid of the tube **1508** are amplified and inverted through this tube to appear as negative pulses at the anode thereof. As indicated, they are impressed upon the control grid of the inverter tube **1509** through the coupling condenser **1512**. The base line or reference voltage level of the negative pulses thus delivered to the tube **1509** is clamped to the ground potential level through the action of the clamping crystal rectifier **1517**. After being amplified and inverted by the tube **1509** the pulses are impressed upon the parallel connected control grids of the tube **1510** through the coupling condenser **1518**. They are greatly amplified through the tube **1510** and are reproduced in amplified form across the cathode load resistor **1519** of this tube. From the cathode terminal of the load resistor **1519**, the pulses are delivered to the circuits **201**, **203** and **204** over the conductor **1502** in the manner previously explained.

The first positive pulse thus produced on the conductor **1502** is impressed upon the control grid of the thyratron tube **1523** through the coupling condenser **1520** and has the effect of overcoming the negative bias normally impressed upon this grid through the resistors **1521*a*** and **1521*b***, whereby the grid of the tube **1523** is driven positive relative to the cathode thereof. As a consequence, the tube **1523** fires to produce space current flow therethrough in a circuit which includes the cathode load resistor **1524**. After the tube **1523** fires, the grid thereof loses control so that thereafter the presence or absence of pulses on the conductor **1502** cannot directly affect the ionized condition of the tube. With the tube **1523** conducting, the voltage of the 150 volt anode current source, less the voltage drop through the tube **1523**, appears across the cathode load resistor **1524** of the tube **1523**. This voltage has a magnitude of the order of 140 volts and is impressed upon the neon indicator tube **1525** through the resistor **1526** to fire the indicator tube and thus provide a visual indication that the finder **12*a*** is in use. The voltage of positive polarity thus developed at the cathode of the +B switching tube **1523** is also applied to the anodes of the tubes **1511** and **1516** through the resistors **1527** and **1529** respectively. It is also impressed upon the +B switching conductor **12*c*** over a path which includes the conductor **1665** and a filter network consisting of a series choke impedance **1535** and a shunt condenser **1536**. From the conductor **1665** the voltage is applied to the anodes of the twenty tubes included in the coincidence tube circuits **203** and **204** through the resistors **1650** and **1651**.

Normally the tubes of the tens coincidence tube circuit **203** are biased to prevent space current flow therethrough by the negative potentials impressed upon the control grids thereof from the bleeder resistors **1652** and **1652*a*** through the isolating resistors **1610*d***, **1620*d***, **1630*d***—

1600*d* individual thereto. Similarly, the tubes of the units coincidence tube circuit **204** are normally biased against space current flow therethrough by the negative potentials impressed upon the respective control grids thereof through the isolating resistors **1641***d*, **1642***d*, **1643***d*—**1640***d*, respectively. When operating anode potentials are supplied to the anodes of the gate control tubes of the circuits **203** and **204** in the manner just explained, these tubes are conditioned to fire under the joint control of the negative tens and units pulses respectively delivered to these circuits and the pulses gated to the circuits over the conductor **1502** from the pulse input circuit **201**. In this regard, it should be noted that the described response of the pulse input circuit **200** and the +B switching circuit **201** to the pulses delivered to the finder **12***a* over the conductor **50** in the time position **64***b* occurs during the first pulse frame or during the first few pulse frames which follow application of the first pulse in the time position **64***b* to the control grid of the tube **1508**. During the next few pulse frames, the pulses delivered in the time position **64***b* over the conductor **1502** to the control grids of the tubes in the circuits **203** and **204** coact with the tens and units gate pulses which are negatively applied to the cathodes of these tubes to fire that tens coincidence tube which corresponds to the tens time position of the calling line in each pulse frame and that units coincidence tube which corresponds to the units time position of the calling line **23** in each pulse frame. In this regard, it will be noted that the positive pulses gated by the circuit **200** in the time position **64***b* assigned to the calling line **23** are impressed upon the control grids of the tubes **1610**, **1620**, **1630**—**1600** of the circuit **203** through the coupling condensers **1610***a*, **1620***a*, **1630***a*—**1600***a*, respectively. The same pulses are impressed upon the control grids of the tubes **1641**, **1642**, **1643**—**1640** of the units coincidence tube circuit **204** through the coupling condensers **1641***a*, **1642***a*, **1643***a*—**1640***a*, respectively. However, these pulses are capable of firing the tubes of the two circuits **203** and **204** only when they occur coincidentally with the application of negative tens or units pulses to the cathodes of the tens and units coincidence tubes. In this regard, it will be understood from the preceding explanation that the pulses developed on the conductor **1502** in the time position **64***b* occur in coincidence only with the second tens pulse of each pulse frame and the third units pulse of each pulse frame. Accordingly, only the tens coincidence tube **1620** is fired in the circuit **203** and only the third units coincidence tube **1643** is fired in the circuit **204**. The other tubes of the tens coincidence tube circuit **203** cannot fire due to lack of coincidence between the tens pulses negatively impressed upon the control grids thereof and the pulses gated to the conductor **1502** by the circuit **200** in the time position **64***b* assigned to the calling line. Similarly, the other nine tubes of the units coincidence tube circuit **204** cannot fire due to lack of coincidence between the units pulses respectively impressed upon the cathodes thereof and the pulses produced on the conductor **1502** in the time position **64***b*. Once the tubes **1620** and **1643** are fired, the control grids thereof lose control, such that space current flow therethrough continues without interruption so long as the +B switching circuit **201** maintains operating potentials upon the anodes thereof. Moreover, once the tube **1620** has fired, the other tens coincidence tubes of the circuit **203** are positively prevented from firing even though pulses may inadvertently be coincidentally impressed upon the cathode and control grids of one or more thereof. Thus when space current flow through the tube **1620** is established, the 140 volts present on the conductor **1665** is largely dissipated as a voltage drop across the common anode resistor **1650** with the result that the anode potentials of the other nine tens coincidence tubes are all lowered to values at which firing of these tubes cannot occur. Similarly, the voltage drop developed across the resistor **1651** when the tube **1643** fires positively prevents any of the other nine units coincidence tubes in the circuit **204** from firing. Provision of the voltage dropping resistors **1650** and **1651** to perform the functions just described positively prevents the finder **12***a* from being operatively associated with two or more lines at the same time. In this regard, it may occur that calls are simultaneously initiated on two lines during the existence of an allotter pulse on the conductor **36***a* at a time when link **12** is not in use, with the result that multiplexer pulses occurring in the time positions respectively assigned to the two calling lines may be gated by the pulse input circuit **200** to the tens and units coincidence tube circuits **203** and **204**. In such case, the resistors **1650** and **1651** positively prevent more than one tube from firing in each of the two circuits and thus prevent the finder **12***a* from being associated with more than one calling line.

When the tens coincidence tube **1620** and the units coincidence tube **1643** are rendered conductive in the manner explained above, the pulse gating rectifiers **1620***b* and **1643***b* respectively controlled thereby are unbiased to permit pulse transmission therethrough over the conductors **1664** and **1663**, respectively, to the pulse forming circuit **205**. To explain more fully the manner in which the crystal rectifier **1620***b* is rendered operative to gate the negative tens pulses appearing on the conductor **33***b*, it is noted that when the tube **1620** is non-conductive, the cathode terminal of the rectifier **1620***b* is biased positive relative to ground by an amount equal to the voltage drop across the resistor **1656**. This voltage is of the order of ten volts and is impressed directly across the two crystals **1620***b* and **1620***d* to bias the crystals against current conduction therethrough. Each of the negative pulses impressed upon the cathode of the tube **1620** through the condenser **1620***c* from the tens pulse conductor **33***b* serves to overcome this bias and drive the cathode of the tube **1620** towards ground potential. In this regard, it is noted that the crystal rectifier **1620***d* tightly clamps the tops of the negative pulses at the ground potential level, i.e., prevents the cathode of the tube **1620** from being driven negative with respect to ground. Specifically, if the positive voltage impressed across the rectifier **1620***d* from the resistor **1656** through the back resistance of the rectifier **1620***b* is exceeded by the negative pulse impressed upon the cathode through the condenser **1620***c* from the conductor **33***b*, the polarity of the voltage across the rectifier **1620***d* is reversed to render this rectifier conductive with the result that the condenser **1620***c* is charged. During succeeding pulses appearing on the conductor **33***b* the voltage across the condenser **1620***c* resulting from this charge is subtracted from the pulse voltage in producing a change in the potential level of the cathode of the tube **1620**. Charging of the condenser **1620***c* continues so long as the amplitude of the pulse appearing on the conductor **33***b* is excessive and the extent of charge and hence the magnitude of the voltage across the condenser **1620***c* varies directly with the extent to which the pulse amplitude exceeds the normal bias voltage across the clamping rectifier **1620***d*. Thus the rectifier **1620***d* positively clamps the cathode of the tube **1620** at the ground potential level as negative tens pulses are applied to this cathode. The crystal rectifiers **1610***d*, **1630***d*—**1600***d* perform the same potential clamping functions at the cathodes of the tubes **1610**, **1630**—**1600**, respectively. Thus variations in the cathode potential levels of the tens coincidence tubes in the circuit **203** due to amplitude variations in the tens pulses impressed upon the respective pulse conductors **33***a*, **33***b*, **33***c*–**33***j* are positively prevented. In identical manner, the clamping crystal rectifiers **1641***e*, **1642***e*, **1643***e*—**1640***e* prevent amplitude variations in the units pulses respectively delivered to the cathodes of the tubes **1641**, **1642**, **1643**—**1640** from driving the potentials of the tube cathodes negative relative to the ground potential level. In this regard, it will be noted that the gating and clamping

rectifiers, such, for example, as the rectifiers **1641b** and **1641e** associated with the coincidence tube **1641**, included in the units coincidence tube circuit **204**, are normally biased against current conduction therethrough by the voltage drop across the resistor **1657**.

After the tube **1620** is fired in the manner explained above, the upper anode terminal of the rectifier **1620b** is driven positive relative to the lower cathode terminal thereof to render this rectifier effective to gate the negative pulses appearing on the conductor **33b**. These pulses are transmitted over the conductor **1664** and through the condenser **1558** to the right control grid of the tube **1528**. When the cathode potential of the tube **1620** is elevated to a higher positive level as a result of the tube firing, the bias voltage across the clamping rectifier **1620d** is obviously increased to the same level, thereby to decrease the likelihood of the negative tens pulses impressed on the conductor **33b** overcoming this bias potential. In an entirely similar manner, the polarity of the voltage across the gating crystal rectifier **1643b** is reversed and the crystal rectifier **1643e** is rendered inactive as a clamping rectifier when the units coincidence tube **1643** is fired in the circuit **204** in the manner explained above. Negative units pulses developed on the pulse conductor **30c** in the ring circuit **20** are gated by the rectifier **1643b** and transmitted to the left grid of the pulse forming tube **1528** over a path which includes the conductor **1663** and the coupling condenser **1557**.

Referring now more particularly to the manner in which the finder pulse forming circuit **205** responds to the tens and units pulses gated thereto from the circuits **203** and **204**, it is pointed out that normally both sections of the tube **1528** are heavily conductive by virtue of the positive potentials impressed upon the control grids thereof through the grid current limiting resistors **1561** and **1562** from the positive terminal of the anode current source. The tens pulses gated by the crystal rectifier **1620b** are of negative polarity and each pulse is of sufficient amplitude to cut off space current flow through the right section of the tube **1528**. Similarly, the units pulse gated by the crystal rectifier **1643b** are of negative polarity and each pulse is of sufficient amplitude to cut off space current flow through the left section of the tube **1528**. The resulting variations in the potential of the tube anode terminal **1563** are illustrated in Fig. 44 of the drawings by the curve A. As there shown, the normal positive potential of this anode terminal is less than the 150 volt value of the anode current source by an amount *a—a* equal to the voltage drop across the anode resistors **1564**. The tens and units pulses gated to the control grids of the tube **1528** causes the potential level of the terminal **1563** to be correspondingly pulsed. Thus as each of the first and third to tenth negative units pulses of each pulse frame is negatively gated to the left control grid of the tube **1525** to cut off space current flow through the left section of this tube, the voltage drop across the resistor **1564** is correspondingly reduced to produce a corresponding increase in the potential of the terminal **1563**. These nine units pulses of each pulse frame do not occur coincidentally with the tens pulse gated by the circuit **203** to the right control grid of the tube **1528** during the pulse frame and accordingly normal space current flow through the right section of the tube **1528** occurs for the duration of each identified units pulse. However, the second units pulse gated by the units coincidence tube circuit **204** in the time position **64b** occurs coincidentally with the tens pulse **73a** gated by the circuit **203**. As a consequence, space current flow through both halves of the tube **1524** is cut off during the short time interval of the units pulse. Thus, once during each pulse frame a composite pulse consisting of the units pulse occuring in the time position **64b** and the tens pulse occurring in the tens time position **73a** is developed at the anode terminal **1563**. Since anode current flow through both sections of the tube **1528** is completely stopped during each time position **64b**, it will be understood that each composite pulse has a clean top, i.e., noise components are clipped off.

All of the pulses thus developed at the anode terminal **1563** of the tube **1528** are of positively polarity and are impressed upon the control grid of the pulse clamping tube **1531** through the condenser **1566**. Normally the voltage drop across the resistor **1565** is negatively applied to the control grid of the tube **1531** to bias this grid beyond cutoff by an amount *b—b*. As shown by the curve B in Fig. 44, this bias voltage is appreciably greater than the amplitude of either the unwanted units pulses or the single tens pulse impressed upon this control grid during each pulse frame. Thus the tens pulses **73a** and the first and third to tenth units pulses of each pulse produce no anode current flow through this tube and hence are not reproduced at the anode of the tube. However, the second units pulse of each pulse frame, i.e., that occurring in the time position **64b** and superimposed upon the tens pulse occurring in the tens pulse time position **73a**, serves to drive the grid of the tube **1531** into the conductive region of the tube. In other words, that portion of each composite pulse which exceeds in amplitude the bias voltage value *b—b* is reproduced in amplified form as a negative pulse at the anode of the tube **1531**. Since the bias on the control grid of the tube **1531** is held at a fixed value such that exactly the same portion of each composite pulse is clipped off in the tube, it will be understood that the pulses gated by this tube are of constant amplitude and have clean bottoms as well as clean tops, i.e., noise components are completely removed therefrom.

The pulses thus gated by the tube **1531** in the time position **64b** are of negative polarity and are impressed upon the control grid of the pulse inverter tube **1533** through the coupling condenser **1532**. These pulses cause pulsed variations in the anode potential of the tube **1533** in the manner illustrated by the curve C in Fig. 44 of the drawings. From an examination of this curve, it will be noted that one positive pulse is developed at the anode of the tube **1533** during each pulse frame and that each pulse occurs in the time position **64b** assigned to the calling line **23**. These pulses are hereinafter referred to as finder pulses.

The finder pulses developed at the anode of the tube **1533** in the manner just explained are impressed upon the control grid of the cathode follower tube **1500** through a pulse attenuating network **1569** and the coupling condenser **1534**. As reproduced across the cathode load resistor **1570** of the tube **1500**, these pulses are impressed upon the busy conductor **52** through the coupling condenser **1571**. Application of positive busy pulses to the conductor **52** in the time position **64b** of each pulse frame serves to mark the calling line **23** as busy in the other finders and connectors of the system. The pulses applied to the busy conductor **52** in the time position **64b** are also impressed upon the right control grid of the pulse mixer tube **1501** through the coupling condenser **1559** along with any other busy pulses applied to this conductor as a result of the other lines of the system being busy. In the absence of the facilities described below, the busy pulses thus impressed upon the right control grid of the tube **1501** in the time position **64b** would have the effect of biasing the suppressor grid of the finder control gate tube **1508** to cutoff and thus preventing the desired multiplexer pulses from being gated by this tube. To prevent this action from occurring, the left section of the tube **1501** is controlled to modify the operation of the right section of the tube during the time position **64b** of each pulse frame. More specifically, positive finder pulses are impressed upon the left control grid of the tube **1501** directly from the anode of the tube **1533** through the coupling condenser **1568**. These finder pulses have approximately twice the amplitude of the busy pulses coincidentally impressed upon the right control grid of this tube

through the condensers **1559** and **1571** from the cathode load resistor **1570** of the cathode follower tube **1500**. As a consequence, heavy space current flow through the left section of the tube **1501** and the cathode resistor **1572** occurs during each finder pulse interval. The positive pulses thus developed across the cathode load resistor **1572** occurring in the time position **64*b*** assigned to the calling line are impressed on the finder gate conductor **12*d***. They are transmitted over this conductor to the connector **12*b*** as finder gate pulses and serve to condition the connector to respond only to multiplexer pulses appearing on the multiplexer output conductor **50** in the time position assigned to the calling line **23**.

The increase in anode current flow through the left section of the tube **1501** and the cathode resistor **1572** which occurs during each finder pulse interval has the effect of increasing the bias on the right section of the tube to an extent such that current flow through the anode resistor **1573** and the right section of the tube **1501** drops to a very low value. As a consequence, the voltage drop across the resistor **1573** is reduced to a very low value permitting charging current to flow from the positive terminal of the anode current source through this resistor, the condenser **1503** and the crystal rectifier **1504** to the grounded terminal of the anode current source. Thus the condenser **1503** is charged to a relatively high voltage level during the finder pulse interval. At the end of each such interval, the voltage across the condenser **1503** is negatively applied to the suppressor grid of the gate tube **1508** in opposition to the voltage drop across the right section of the tube **1501** and the cathode load resistor **1572**. The voltage across the condenser **1503** predominates sufficiently to bias the suppressor grid of the tube **1508** beyond cutoff. Moreover, the described charging action of the condenser **1503** occurs during the time position **64*b*** of each pulse frame. Further the discharge path for this condenser, which includes the high back resistance of the rectifier **1504**, has such a long time constant that the condenser **1503** is not appreciably discharged between successive charging intervals. As a consequence, the tube **1508** is biased beyond cutoff by the voltage across the condenser **1503** throughout each pulse frame except the particular interval spanned by the time position **64*b*** of each pulse frame. During this interval of each pulse frame the right anode of the tube **1501** becomes highly positive to overcome the voltage across the condenser **1503** and thus lower the bias on the suppressor grid of the tube **1508** so that this tube can conduct.

From the preceding explanation, it will be understood that pulses from the multiplexer **11** are permitted to enter the finder **12*a*** only during those intervals when finder pulses are developed by the circuit **205** coincidentally with the application of a positive allotter pulse to the screen grid of the tube **1508**. Thus, regardless of the potential applied to the suppressor grid of the tube **1508**, this tube cannot conduct in the absence of a positive allotter pulse on the screen grid thereof. In this regard, it is pointed out that the repetition rate of the allotter pulses on the conductor **36*a*** is sufficiently high to prevent the +B switching circuit **201** from relaxing, i.e., removing +B potential from the conductors **1665** and **12*c***, during the intervals separating successive allotter pulses. This fact will become apparent from the immediately following description of the mode of operation of the switching circuit **201**.

Referring now more particularly to the operation of the +B switching circuit **201**, it is pointed out above that the +B switching tube **1523** is fired under the influence of the pulses gated by the tube **1508** in the time position **64*b*** immediately the finder **12*a*** is taken into use to handle the call initiated at the substation A and that when space current flow through this tube is established an operating anode potential of 140 volts appears at the cathode end of the resistor **1524**. After this tube is fired, deionization thereof is under the control of the two associated tubes **1511** and **1516**. More specifically, the extinguishing tube **1516** is provided to deionize the tube **1523** when the call is abandoned or terminated, while the +B switch timing tube **1511** is provided to prevent undesired deionization of the tube **1523** during the intervals separating allotter pulses on the conductor **36*a***, the open circuit periods of dial impulses dialed through operation of the impulsing contacts **1105** at the calling substation, hook switch flashing intervals, and other periods of short duration when the loop circuit extending from the substation A to the line circuit **10** may be interrupted. The manner in which these functions are carried out in the circuit **201** during operation of the finder **12*a*** to handle the call under consideration may best be explained by reference to Figs. 45, 46A, and 46B of the drawings, the significance of which is pointed out more fully below. Normally, i.e., with the circuit **201** inactive, the condenser **1575** is completely discharged through the resistors **1527** and **1524** so that the terminal **1574** thereof is at substantially zero potential. Also, with the circuit **201** inactive, the negative 100 volts impressed between the bias terminal **1667** and ground by the bias potential source is divided between the two resistors **1513** and **1576** in the ratio of five volts across the resistor **1513** and 95 volts across the resistor **1576**. Thus the cathode of the tube **1511** is normally maintained at a potential which is 95 volts negative with respect to ground. Due to the presence of this high negative potential upon the cathode of the tube **1511** it is necessary to provide a separate heater supply source for the filamentary heater of the tube in order to prevent arcing between the tube heater and cathode which would result in destruction of the tube. This is accomplished by providing a separate current supply transformer **1514** having its primary winding **1515** connected to an appropriate source of alternating current and its secondary winding bridged by the heater of the tube **1511**. This winding is connected to the negative terminal of the 100 volt bias potential source so that the heater is effectively maintained at a potential approximately five volts negative with respect to the tube cathode. This arrangement positively precludes any arcing between the cathode and cathode heater of the tube **1511**.

When the +B switch tube **1523** fires in the manner explained above, the condenser **1578** is charged to the full value of the voltage across the resistor **1524** through the resistor **1529**, and operating anode potential is supplied to the tube **1516**. Also, the condenser **1577** is charged through the cathode resistor **1522** to the full value of the voltage across the resistor **1524**. Charging of the condenser **1577** over this path drives the cathode terminal of the resistor **1522** highly positive during the initial portion of the charging interval. Concurrently with charging of the condenser **1577**, a charging path for the condenser **1575** is established from the cathode terminal of the resistor **1524** through the timing resistor **1527**. Initially, the major portion of the charging voltage appears across the resistor **1527** and a very small portion thereof appears across the condenser **1575**. Similarly, the major portion of the charging voltage for the condenser **1577** initially appears across the cathode resistor **1522** immediately after the tube **1523** fires. Thus during the initial portion of the condenser charging interval, the control grid of the tube **1516** is held at ground potential whereas the cathode of the tube is driven highly positive. The grid of the tube **1516** is thus effectively biased negative relative to the tube cathode by an amount equal to the voltage drop across the resistor **1522**. This bias prevents the tube **1516** from firing.

As explained above, the grid of the tube **1511** is normally biased approximately five volts negative relative to the tube cathode by the voltage across the resistor **1513**. This bias voltage prevents the tube **1511** from firing in the absence of positive pulses on the output conductor **1502** of the pulse input circuit **200**. However, immediately positive pulses are gated to this conductor by the pulse input circuit **200** they are impressed upon the control grid of the tube **1511** through the condenser **1654** and serve

to drive this control grid positive relative to the tube cathode and fire the tube. It will thus be apparent that the tubes **1511** and **1523** are fired substantially simultaneously. When the tube **1511** is fired, current flows through this tube and the condenser **1575** in a circuit which extends from the grounded terminal of the resistor **1576** through the condenser **1575** and the space current path through the tube **1511** to the cathode terminal of the resistor **1576**. Thus the voltage across the resistor **1576** less the voltage drop through the tube **1511** is impressed across the condenser **1575** immediately the tube **1511** fires. As a consequence, the circuit terminal **1574** is driven approximately 80 volts negative with respect to ground. In Fig. 46A of the drawings, this negative voltage rise of the terminal **1574** is indicated along the portion C1 of the potential curve A. The negative potential thus developed at the terminal **1574** is directly impressed upon the control grid of the tube **1516** to bias this grid highly negative with respect to the cathode of the tube and thus prevent the tube from firing regardless of the voltage across the cathode resistor **1522**. When the voltage across the condenser **1575** rises to approximately 80 volts, current flow through the tube **1511** drops to the extinction point and is interrupted. The condenser **1575** now starts to charge through the resistor **1527** to the positive potential of 140 volts across the resistor **1524** as indicated by the line E in Fig. 46 of the drawings. The charging rate of the condenser **1575** is obviously determined by the time constant of the series circuit comprising this condenser and the resistor **1527**. In this regard, it is pointed out that the condenser **1575** has a very large capacitance value, of the order of .1 microfarad, and the resistor **1527** has a very large resistance value of the order of 4.7 megohms, such that the time constant of the circuit is very long and the charging rate of the condenser **1575** is correspondingly low. Specifically, the condenser **1575** starts to charge at the rate indicated by the curve A1 in Fig. 46A. As it charges, the negative potential of the terminal **1574** is correspondingly reduced as indicated by the curve segment B1 in Fig. 46A. When the potential of this terminal is reduced to a value of approximately 60 volts negative, the voltage across the tube **1511** is increased to a value at which this tube refires. When the tube **1511** refires, the voltage across the condenser **1575** instantly rises to a value of 80 volts as indicated by the curve segment C2 in Fig. 46A to again produce deionization of the tube **1511**. The described relaxation type of operation of the tube **1511** and condenser **1575** continues in the manner indicated by the curve segments B2, C3, B3, C4 so long as an off hook condition persists at the called substation A, i.e., so long as the loop extending from this substation to the line circuit **10** is not interrupted.

During the open circuit or break period of each dial impulse, the transmission of multiplexer pulses to the finder **12***a* in the time position **64***b* assigned to the calling line **23** is arrested in the manner indicated in Fig. 46B of the drawings, so that the tube **1511** cannot refire after it is first extinguished during the initial portion of the dial impulse break period. Accordingly and again referring to Fig. 46A, the condenser **1575** charges through the resistor **1527** for the duration of the impulse in the manner indicated by the curve segment B4. Due to the long time constant of the condenser charging circuit, the dial impulse break period is not long enough to charge the condenser to the value D at which the negative bias on the control grid of the tube **1516** becomes insufficient to prevent this tube from firing. When the dial impulse break period ends to cause resumption of the pulse gating operation of the circuit **200** in the manner shown in Fig. 46B, the tube **1511** immediately fires to recharge the condenser **1575** and raise the negative potential of the terminal **1574** to the negative 80 volts value. During the closed circuit period of each impulse, the described relaxation operation of the tube **1511** and condenser **1575** is resumed in the manner in the manner explained above as indicated by the curve segments B5, C6, B6 and C7 of the curve A. This action also continues after the dialing operation is completed and so long as the receiver at the calling substation is held off hook. In Fig. 46A, the curve segments B7 and C8 of the curve A illustrate the last relaxation cycle which occurs before the call is abandoned or terminated.

When the call is abandoned or terminated at the point H along the time axis, gating of multiplexer pulses to the conductor **1502** by the pulse input circuit **200** is interrupted in the manner described above. Accordingly, the condenser **1575** is permitted to charge through the resistor **1527** from the cathode resistor **1524** so that the negative potential of the terminal **1574** is decreased along the curve segment B8. When this potential is reduced to the value D with a corresponding reduction of the bias on the control grid of the tube **1516** this tube fires. In firing, the tube **1516** instantly discharges the condenser **1578** through the space current path thereof and the resistor **1522**. Thus a voltage of approximately 130 volts is developed across the resistor **1522**. This voltage spike is additively combined with the 140 volts across the charged condenser **1577** to produce a voltage across the cathode resistor **1524** of approximately 270 volts. Thus the cathode of the tube **1523** is driven positive relative to the anode of this tube and space current flow through the tube is interrupted. Referring to Figs. 45 and 46A the transient spike developed across the resistor **1524** is indicated at I at the end of the switched +B potential line G in Fig. 45, and the change in potential at the terminal point **1574** produced by the same transient voltage is indicated at E along the potential curve A of Fig. 46A. When space current flow in the tube **1523** is thus interrupted, the condenser **1577** discharges through the two resistors **1524** and **1522**, following which the voltage across the resistor **1524** drops to zero. Thus operating anode potentials are removed from the conductors **1665** and **12***c*. As a consequence, the tubes **1620** and **1643** in the circuits **203** and **204** are deionized, the tube **1516** is deionized and all gas filled tubes of the connector **12***b* are deionized. Following deionization of the identified tubes, the finder **12***a* and the connector **12***b* are fully restored to normal.

From the preceding explanation, it will be understood that the switching circuit **201** functions positively to prevent false release of the link **12** during hook switch flashing, or the dialing of impulses at any calling substation with which the link **12** is operatively associated. In this connection, it is pointed out above that the multiplexer pulses accepted by the finder **12***a* over the multiplexer output conductor **50** for the duration of a call are all gated by the allotter pulses impressed upon the conductor **36***a* by the link allotter **24**. In other words, multiplexer pulses occurring in the time position assigned the calling line with which the link is operatively associated are only gated by the tube **1508** during those intervals when allotter pulses are impressed upon the screen grid of this tube, and hence are not gated to the control grid of the timing tube **1511** during the periods separating the allotter pulses. However, the allotter pulse periodicity is high enough so that the condenser **1575** is prevented from discharging to the link release value D during the interval separating successive allotter pulses. Specifically, the allotter pulse periodicity is such that the interval separating each successive pair of allotter pulses is only a very small fraction of the period represented by the potential curve segment B8 in Fig. 46A. Thus space current flow through the switch tube **1523** is maintained throughout the call.

An additional important feature of the finder **12***a* is that of using the high mu inner control grid of the tube **1508** to handle the pulses delivered to the finder over the conductor **50** from the multiplexer and of using the low mu suppressor grid of the tube to handle the busy pulses

generated by the pulse mixer tube **1501**. This is an exception to the general rule followed in the other line switching components of the system of employing the suppressor grids of gating tubes to handle signal modulated pulses. In the finder **12***a*, this exception is permissible since the circuit does not function to transmit intelligence signals to a following circuit. The purpose of utilizing the suppressor and control grids of the gating tube **1508** in the described manner is that of preventing the high amplitude gating pulses developed at the right anode of the tube **1573** from being gated by the tube **1508** in the absence of coincident multiplexer pulses on the multiplexer output conductor **50**. Specifically, if the high amplitude gating pulses developed at the right anode of the tube **1501** were impressed upon the high mu inner control grid of the tube **1508**, they would be gated by this tube regardless of the presence or absence of the relatively low amplitude multiplexer pulses on the low mu suppressor grid of the tube. Such undesired gating of the pulses developed at the right anode of the tube **1501** would effectively lock up the finder **12***a* and render the same inoperative. However, by utilizing the low mu suppressor of the tube **1508** to handle the high amplitude gating pulses developed at the right anode of the tube **1501**, these pulses cannot be repeated by the tube **1508** in the absence of coincident multiplexer pulses on the inner control grid of the tube. Moreover, the multiplexer pulses impressed on the inner control grid of the tube **1508** rarely if ever exceed an amplitude of nine volts, which pulse amplitude is insufficient to cause gating thereof by the tube **1508** in the absence of coincident high amplitude gating pulses on the suppressor grid of the tube. Another advantage of the described arrangement resides in obtaining maximum response of the tube **1508** and the tandem related tubes **1509** and **1510** of the pulse input circuit **200** to the multiplexer pulses gated by the tube **1508**.

As explained above, multiplexer pulse gating by the circuit **200** only occurs when allotter pulses are present on the conductor **36***a*. For this reason each allotter pulse should be of relatively long duration, i.e., span a time interval equal to that of ten to twenty pulse frames. This interval is several times greater than that required for the finder to establish switched +B potential on the conductors **12***c* and **1665**, fire its own coincidence tube and start emitting busy pulses over the busy conductor **52**. By thus allotting the finders on a long allotter pulse basis, partial seizure of a plurality of finders by the same calling line is minimized.

In the event that multiplexer pulses assigned to a calling line are first released to the finder **12***a* at an instant near the end of an allotter pulse on the conductor **36***a*, one of three possibilities may result. First, the finder may respond rapidly enough to associate itself with the calling line and emit busy pulses over the conductor **52** before the allotter pulses end. Secondly, the allotter pulse may end after the +B switching circuit **201** has operated but before the appropriate tubes have fired in the coincidence tube circuits **203** and **204**. In this case, no busy pulses are emitted over the conductor in the time position assigned to the calling line and the next finder in allotter time sequence is thus free to associate itself with the calling line. The finder **12***a* then returns to normal after a short period determined by the release time of the +B switching circuit **201**. The third possibility is that the allotter pulse may end before the +B switching circuit **201** operates. In this case the next allotter finder associates itself with the calling line and the finder **12***a* retains its normal condition.

Connector 12b

As previously explained in connection with Fig. 2B of the drawings, this connector generally comprises calling and called line in gate circuits **207** and **223**, calling and called line out gate circuits **226** and **224**, calling and called line reconstructor circuits **208** and **222**, a dial impulse integrater circuit **209**, tens and units changeover gate circuits **210** and **214**, tens and units sequence timing circuits **212** and **216**, a units start register circuit **213** and tens and units digit registers **211** and **215**. The connector **12***b* is also diagrammatically illustrated in Fig. 2B of the drawings as comprising a connector pulse forming circuit **217**, a busy test circuit **218**, a busy lock circuit **219**, a busy gate circuit **220**, a ring trip circuit **221** and tones gate circuits **225**. The functions performed by the connector and the above-identified components thereof are also generally described above with reference to Fig. 2B of the drawings.

Referring now more particularly to Figs. 9, 10, 11, 18, 19 and 20 wherein the circuitry of the connector **12***b* is illustrated, it will be readily understood that the details of this connector may best be described in terms of the functional significance of the various circuit components thereof. In order to correlate these six figures with the schematic showing of Fig. 2B, it may be pointed out that the calling line in gate circuit is shown in Fig. 19 as comprising a gate tube **1916** and an inverter tube **1915**, the calling line reconstructor circuit **208** is shown in Fig. 18 as comprising a peaker tube **1809***a*, a condenser charging tube **1808***a*, a condenser discharge tube **1807***a* and a cathode follower tube **1806***a*, and the called line out gate circuit **224** is illustrated in Fig. 19 as including an inverter tube **1913** and two gate tubes **1912** and **1914**. Similarly, the called line in gate circuit **223** as shown in Fig. 19 comprises a gate tube **1911** and an inverter tube **1910**, the called line reconstructor circuit **222** is shown in Fig. 18 as comprising a peaker tube **1809***b*, a condenser discharging tube **1807***b*, a condenser charging tube **1808***b* and a cathode follower tube **1806***b*, and the calling line out gate circuit **226** is shown in Fig. 19 as including an inverter tube **1918** and two gate tubes **1917** and **1919**. The dial pulse integrator circuit **209** is illustrated in Fig. 20 and comprises an integrator tube **2008** and a cathode follower tube **2009**. The tens changeover gate circuit **210** is shown in Fig. 9 as comprising an inverter tube **902** and a cathode follower tube **903**. This circuit controls the tens digit register **211** which is shown in Figs. 9, 10, 11 as comprising a priming tube **904** and ten impulse counting tubes **901**, **1002** to **1006**, inclusive, and **1147** to **1150** inclusive. The units changeover gate circuit **214** is also illustrated in Fig. 9 and includes an inverter tube **912** and a cathode follower tube **913**. This circuit controls the units digit register **215** which as shown in Figs. 9, 10 and 11 comprises a priming tube **914** and ten impulse counting tubes **911**, **1012** to **1016** inclusive, **1157** to **1160** inclusive. The tens and units sequence timing circuits **212** and **216** are respectively illustrated in Figs. 9 and 10 and are substantially identical. Specifically, the tens sequence timing circuit **212** comprises a start tube **941**, a timing tube **942** and a condenser discharge tube **940**. Similarly, the units sequence timing circuit **216** comprises a start tube **1020**, a timing tube **1022** and a condenser discharge tube **1021**. The connector pulse forming circuit **217** is shown in Figs. 10 and 11 as comprising two pulse combining tubes **1023** and **1024**, a clipping tube **1025** and an inverter tube **1161**. The busy test circuit **218** is illustrated in Fig. 11 as comprising a busy test tube **1162** and an inverter tube **1163**. The busy gate circuit **222** is also shown in Fig. 11 and comprises a single gate tube **1164**. The ring trip circuit **221** is also shown in Fig. 11 and includes the ring trip tube **1165**. The supervisory tone gate circuits generally indicated at **225** are illustrated in Fig. 20 and comprise a dial tone gate tube **2003**, a ring back tone gate tube **2004** and a busy tone gate tube **2005**. Finally, the busy lock circuit **219** is illustrated in Fig. 20 as comprising an inverter tube **2006** and a busy lock tube **2007**. The manner in which the identified tubes of the connector are interconnected is pointed out more fully below with the reference to op-

eration of the individual circuits. Although the identified tubes may be of any desired commercial types having the required operating characteristics, it is pointed out that preferably the tubes **1911, 1912, 1914, 1916, 1917** and **1919** are commercial type 6AS6 pentodes, the tube **903, 913, 1025, 1161, 1163, 1164, 1806*a*, 1806*b*, 2003, 2004, 2005, 2006** and **2009** are commercial type 6C4 triodes, the tubes **902, 912, 940, 1021, 1807*a*, 1807*b*, 1808*a*, 1808*b*** and **2008** are commercial type 6AQ6 duo-diode triodes, the tubes **1809*a*** and **1809*b*** are commercial type 6AK5 pentodes and the tubes **1910, 1913, 1915** and **1918** are commercial type 6AK6 pentodes. Preferably, the gas filled thyratrons of the hot cathode type included in the connector **12*b***, namely the tube **904, 914, 941, 1020, 1162, 1165**, are of the R.C.A. commercial 5696 type. The cold cathode gas filled triodes included in the connector **12*b*** are preferably of the 1621 type. This group includes the tube **901, 911, 942, 1002** and **1006** inclusive, **1147** to **1150** inclusive, **1012** to **1016** inclusive, **1157** to **1160**, inclusive, **1022** and **2007**. The pulse combining tubes **1023** and **1024**, inclusive, in the connector pulse forming circuit **217** are illustrated as separate tubes, although the two tube sections may be incorporated in a single envelope. For example, a twin triode of the 6J6 type may well be used as the pulse combining tube instead of the two triodes shown.

In considering the operation of the connector **12*b***, reference is again made to the above-described call originating at the substation A and routed by way of the link **12** to the called substation B. From the description pertaining to this call, it will be recalled that when the finder-connector link **12** is idle, the finder **12*a*** withholds operating anode potential from the conductor **12*c*** and also withholds finder gating pulses from the conductor **12*d***. However, immediately the finder **12*a*** is operatively associated with the calling line **23**, the +B switching circuit **201** embodied therein operates to impress a positive potential of 140 volts on the conductor **12*c*** and almost immediately thereafter functions to impress finder gating pulses upon the conductor **12*d*** in the time position **64*b*** assigned to the calling line **23**. When operating anode potential is thus suddenly applied to the conductor **12*c***, it is impressed across the series connected condenser **907** and resistor **908** of the tens digit register **211** with the result that the condenser **907** starts to charge through the resistor **908**. Initially, however, the major portion of the available voltage is dissipated as a voltage drop across the resistor **908**, such that the control grid of the thyratron tube **904** is driven positive relative to the cathode of this tube. As a consequence, the tube **904** is fired to produce current flow therethrough over a path which includes the resistor **909**, the cathode bus conductor **230** and the cathode load resistors **961** and **962** of the cathode follower tube **903**. Current flow in this circuit raises the positive potential of the parallel connected cathodes of the tubes in the tens digit register **211** to a high value. Concurrently, a relatively large voltage drop is produced across the resistor **909** to decrease the positive potential impressed upon the grid of the tube **901** through the coupling condenser **920**. After the tube **904** is fired in the manner just explained, the control grid thereof loses control such that space current flow through the tube is rendered independent of the potential on the control grid thereof. In this regard, it is noted that after the tube **904** fires the condenser **907** charges to the full value of the anode voltage on the conductor **12*c***, with the result that the control grid of the tube **904** is reduced substantially to cathode potential. Firing of the tube **904** in the manner just explained prevents the ten impulse counting tubes of the tens digit register **211** from prematurely firing in the manner more fully described below. In an entirely similar manner, the condenser **917** and resistor **918** cooperate to effect ionization of the priming tube **914** embodied in the units digit register **215** when anode potential is impressed upon the conductor **12*c*** in the +B switching circuit **201** of the finder **12*a***.

When a relatively high positive potential is developed on the cathode bus conductor **230** interconnecting the cathodes of the tubes in the tens digit register **211** in the manner just explained, this potential is impressed upon the control grid of the dial tone gate tube **2003** over a path which includes the resistor **1182** and the conductor **233**. Normally, the tube **2003** is biased beyond cutoff by the negative potential impressed upon the control grid thereof through the resistor **2018** from the negative terminal of the bias potential source. However, the positive potential developed on the conductor **230** when the tube **904** fires, overcomes the negative bias normally impressed upon the grid of the tube **2003** and serves to bias the tube **2003** to the mid-point of its class A operating range. Thus the dial tone gate tube **2003** is rendered operative to amplify the dial tone signal voltage impressed upon the control grid thereof through the condenser **2041** from the dial tone signal conductor **47**. The amplifier dial tone signal appearing at the anode of the tube **2003** is impressed upon the suppressor grid of the gate tube **1919** in the calling line out gate circuit **226** over a path which includes the condenser **2042**, the resistor **2043** and the conductor **244**. As explained more fully below, this signal voltage modulates the pulses being gated by the tube **1919** in the time position **64*b*** assigned to the calling line **23** with the dial tone signal, whereby this signal is delivered to the calling line to signal the calling subscriber that the dialing operation may be started.

Referring now more particularly to the calling line in gate circuit **207**, it is pointed out that finder gate pulses produced on the conductor **12*d*** in the finder **12*a*** control this circuit to gate multiplexer pulses occurring on the multiplexer output conductor in the time position **64*b*** assigned to the calling line reconstructor circuit **208**. Normally, the control grid of the gating tube **1916** is biased beyond cutoff by the negative potential impressed thereon from the potentiometer **1810*a*** through the resistor **1822*a***. The suppressor grid of the gating tube **1916** is normally biased to a predetermined value through the back resistance of the clamping crystal rectifier **1932** from the potentiometer **1933**. Positive signal modulated multiplexer pulses of positive polarity applied to the conductor **50** in the multiplexer **11** are impressed upon the suppressor grid of the gating tube **1916** through the resistor **1937** and the condenser **1938**. Finder gating pulses developed on the conductor **12*d*** in the finder **12*a*** are of positive polarity and are impressed upon the control grid of the gating tube **1916** over a path which includes the conductor **12*d*** and the condenser **1939**. The tube **1916** is rendered conductive only when multiplexer pulses are impressed on the suppressor grid of the tube coincidentally with excitation of the tube control grid by finder gating pulses. It will be understood, therefore, that the tube **1916** is rendered operative to repeat only those multiplexer pulses which occur in the time position **64*b*** assigned to the calling line **23**. These pulses appear as negative pulse at the anode of the tube **1916** and are impressed upon the control grid of the inverter tube **1915** through the coupling condenser **1934**. In order to prevent variations in the amplitude of the finder gating pulses from producing corresponding variations in the signal bearing multiplexer pulses gated by this tube, facilities are provided for clamping the tops of the finder gating pulses to the zero potential level in the manner illustrated in Fig. 47 of the drawings. These facilities comprise the coupling condenser **1939** and a diode anode **940*b*** of the tube **940** included in the tens sequence timing circuit **212**. Normally the diode section of the tube **940** comprising the anode **940*b*** and the tube cathode is biased against current conduction by the negative potential impressed upon the identified anode through the resistor **1822*a*** from the potentiometer **1810*a***. However,

if the amplitude of the finder gate pulses appearing on the conductor **12***d* exceeds the magnitude of this bias voltage, the anode **940***b* is driven positive relative to the cathode of the tube **940** so that current conduction through this diode section of the tube **940** occurs. As a consequence, charging current flows through the condenser **1939** to build up a voltage across this condenser which is subtracted from the amplitude of the finder gate pulses as seen by the control grid of the tube **1916**. The action which occurs is well illustrated in Fig. 47 wherein the lines A, B, C and D respectively indicate zero bias, cutoff bias, normal bias and minimum finder gate amplitude levels for the control grid of the tube **1916**. As the finder gate pulse amplitude tends to rise, as indicated by the pulse P_1, P_2 and P_3, thereby to increase the voltage drop across the condenser **1939**, the finder gate pulse base line is moved farther away from the zero grid bias level, so that the pulses are prevented from driving the control grid beyond the zero bias potential level. By virtue of this arrangement, each finder gate pulse functions to swing the control grid of the tube **1916** from beyond the cutoff potential level B and the zero bias level A during each pulse period. In order to prevent variations in the base line potential level of the signal bearing multiplexer pulses gated by the tube **1916** from manifesting themselves at the output side of this tube, the pulse base line potential level is clamped to the bias level of the suppressor grid of the tube by means of the clamping crystal rectifier **1932** and the condenser **1938**. Thus if the pulse base line potential level tends to exceed in a negative sense the negative bias potential derived from the potentiometer **1933**, the crystal rectifier **1932** is rendered conductive to permit charging current to flow through this rectifier and the condenser **1938**. As a consequence, a voltage is developed across the condenser **1938** which is effectively subtracted from the pulse base line voltage present on the multiplexer output conductor **50** in so far as the suppressor grid of the tube **1916** is concerned. As a consequence, variations in the base line potential level of the signal modulated multiplexer pulses impressed upon the suppressor grid of the tube **1916** serves to eliminate forward crosstalk between adjacent pulses as reproduced at the output side of this tube. Also, the clamping rectifier **1932** is so poled as to be non-conducting as far as the multiplexer pulses are concerned.

It will be recalled that the signal modulated multiplexer pulses impressed upon the conductor **50** in the multiplexer **11** are of positive polarity. Accordingly, these pulses as amplified through the tube **1916** appear as negative pulses at the anode of this tube. They are repeated to the control grid of the amplifier and inverter tube **1915** through the coupling condenser **1934**, a crystal rectifier **1935** being provided to coact with the coupling condenser **1934** in clamping the base line of the pulses developed at the anode of the tube **1916** to the ground potential level. The tube **1915** amplifies and inverts the pulses and repeats the same as positive pulses to the control grid of the charging tube **1808***a* provided in the calling line reconstructor circuit **208** over a path which includes the coupling condenser **1936** and the conductor **255**.

In considering the operational details of the calling line reconstructor circuit **208**, it is again pointed out that this circuit functions to store the amplitude of the signal modulated multiplexer pulses as amplified through the tubes **1916** and **1915** for an interval equal to the duration of one pulse frame. In general, this is accomplished by charging the condenser **1811***a* through the charging tube **1808***a* in accordance with the amplitude of each pulse repeated to the reconstructor circuit **208** by the calling line in gate circuit **207** and discharging this condenser through the tube **1807***a* just prior to each such condenser charging operation. In the case under consideration, it will be understood that only signal modulated multiplexer pulses occurring in the time position **64***b* assigned to the calling line **23** are gated to the circuit **208** by the calling line in gate circuit **207**.

In considering the details of the reconstructor circuit **208**, it is pointed out that normally the charging tube **1808***a* is biased beyond cutoff by the potential impressed upon the control grid thereof through the crystal rectifier **1816***a* from the bleeder resistors **1817***a* and **1818***a*. Since the condenser **1811***a* must be fully discharged between successive pulses gated to the circuit **208** from the in gate circuit **207**, this condenser is chosen to have a small capacitance value. In order positively to prevent charging of this condenser during the off pulse periods, it is essential that the tube **1808***a* be maintained completely non-conducting during such periods. To this end, a high gain triode is used as the condenser charging tube **1808***a*. This tube is operated at a very low anode voltage through the expedient of utilizing the bleeder network **1812***a* to supply anode voltage to the tube **1808***a*. Normal bias for the condenser discharging tube **1807***a* is supplied from the bleeder circuit **1813***a*, this bias being sufficient normally to cut off space current flow through the tube **1807***a*. Similarly, the peaker tube **1809***a* is normally biased well below cutoff by the potential impressed upon the control grid thereof from a bleeder circuit comprising the potentiometer **1810***a* and the resistor **1822***a*.

Finder gate pulses impressed upon the conductor **12***d* in the finder **12***a* and utilized to control the gate tube **1916** in the manner explained above are also impressed upon the control grid of the peaker tube **1809***a* through the condenser **1939**. Each such pulse has the effect of causing current conduction through the peaker tube **1809***a* for the duration of the pulse. The anode circuit of this tube consists of an inductance element **1814***a* shunted by a crystal rectifier **1815***a*. The inductance element **1814***a* is tuned to resonance at a very high frequency, several times greater than the finder gate pulse frequency, by the stray capacitances associated therewith. Thus the inductance element **1814***a* effectively comprises a resonant circuit which is shock excited into oscillation as the leading edge of each finder gate pulse is impressed upon the control grid of the peaker tube **1809***a* to start current conduction through this tube. However, the rectifier **1815***a* in shunt with the inductance element **1814***a* only allows the first half cycle of the first oscillatory transient to develop, following which it absorbs all energy stored in the inductance element **1814***a*. It will thus be understood that as each finder gate pulse builds up to full amplitude, a very sharp pulse of negative polarity is developed at the anode of the peaker tube **1809***a*. This pulse is coincident with the leading edge of the corresponding finder gate pulse. At the end of each finder gate pulse, current conduction through the tube **1809***a* is cut off, thereby tending to produce a rise in the anode potential of the tube. However, the tube anode is already at the potential level of the anode current supply source due to the action of the rectifier **1815***a* and as a consequence no pulse whatever is produced on this anode as each finder gate pulse ends.

The sharp negative pulse thus developed coincident with the leading edge of each finder gate pulse is utilized to effect discharging of the condenser **1811***a* just before this condenser is recharged to the amplitude of a new signal modulated multiplexer pulse gated to the circuit **208** by the calling line in gate circuit **207**. In this regard it will be recalled that each multiplexer pulse delivered to the connector **12***b* over the conductor **50** occurs approximately at the center of a coincident finder gate pulse. Each negative pulse developed at the anode of the tube **1809***a* during the initial portion of a finder gate pulse is impressed upon the cathode of the discharging tube **1807***a* through the coupling condenser **1823***a*. Each such pulse has the effect of driving the cathode of the tube **1807***a* negative and thus effecting current conduction through this tube for the duration of the pulse. As a consequence, the condenser **1811***a* is permitted to discharge through

the space current path of the tube **1807***a* for the duration of each pulse impressed upon the cathode of this tube. Immediately after the condenser **1811***a* is thus discharged during each finder gate pulse, a positive signal modulated multiplexer pulse is impressed upon the control grid of the charging tube **1808***a* through the condenser **1936** to recharge the condenser **1811***a* to the potential level which corresponds to the amplitude of the multiplexer pulse. So long as multiplexer pulses are thus impressed upon the control grid of the charging tube **1808***a*, the condenser **1811***a* is not fully discharged during any one condenser discharging interval, but is only discharged down to a predetermined level which insures that the amplitude of the immediately succeeding multiplexer pulse will be accurately reflected in the charge produced thereby on the condenser **1811***a*. It will thus be apparent that as the amplitude of the signal bearing multiplexer pulses impressed upon the control grid of the charging tube **1808***a* varies in accordance with intelligence, i.e., voice or other signals derived from the calling line **23**, the voltage across the condenser **1811***a* is correspondingly varied to detect or reproduce the intelligence component of the multiplexer pulses.

During dialing at the calling substation A and more particularly during the open circuit or break period of each dial impulse, the flow of multiplexer pulses through the calling line in gate circuit **207** to the control grid of the charging tube **1808***a* is interrupted. However, the flow of finder gate pulses to the control grid of the peaker tube **1809***a* is not interrupted due the holding action of the +B switching circuit **201** embodied in the finder **12***a*. As a consequence, the discharging tube **1807***a* is periodically rendered conductive during the open circuit period of each dial impulse with the result that the condenser **1811***a* is fully discharged or is discharged down to a very low level. Thus, the circuit **208** is arranged to discriminate between directive dial impulses and supervisory signals on the one hand and voice signals on the other hand.

The bias voltage between the control grid and cathode of the charging tube **1808***a* is in part controlled by the voltage across the condenser **1811***a*, as will be evident from an inspection of the circuit. As a consequence, large variations in the signal input level to the circuit **208** tend to cause the operating bias voltage between the control grid and cathode of the tube **1808***a* to vary over a relatively wide range. To minimize such variations, a feed back circuit is provided between the cathode terminal **1820***a* of the tube **1806***a* and the control grid of the tube **1808***a* which comprises the bleeder resistors **1817***a* and **1818***a* and the crystal rectifier **1816***a*. With this arrangement, any increase in the amplitude of the pulses impressed upon the control grid of the tube **1808***a* produces a voltage rise across the condenser **1811***a* to increase the positive potential level of the cathode terminal **1820***a* of the tube **1806***a*. Due to the increase in the positive potential level of the terminal **1820***a* the return voltage for the rectifier **1816***a* is correspondingly increased to produce a corresponding decrease in the bias on the grid of the tube **1808***a*. Thus the change in grid to cathode voltage resulting from a large increase in the amplitude of the signal pulses delivered to the circuit **208** is held to a minimum. Similarly, when the signal pulse amplitude drops to a low value, the voltage across the condenser **1811***a* is correspondingly reduced and as a further result of the action of the feed back network, the bias potential level of the control grid in the tube **1808***a* is correspondingly increased. The described "boot strap" arrangement for maintaining the grid-cathode bias of the charging tube **1808***a* relatively constant over a wide signal input pulse amplitude range is not required in conjunction with the discharging tube **1807***a* since the grid to cathode voltage of the latter tube is not altered as a result of changes in the amplitude of the signal input pulses.

The signal voltages thus reconstructed across the condenser **1811***a* are positively impressed upon the control grid of the cathode follower tube **1806***a* to effect reproduction of the reconstructed signal voltage at both the anode terminal **1819***a* and the cathode terminal **1820***a* of this tube. More specifically, the voltage developed at the cathode terminal **1820***a* is an exact replica of the voltage across the condenser **1811***a*, whereas the voltage produced at the anode terminal **1819***a* of the tube **1806***a* is an inverted replica of the voltage across the condenser **1811***a*. Typical variations in the voltages developed at these two terminals of the tube **1806***a* during operation of the connector **12***b* to handle the described call routed from the substation A to the substation B are illustrated by the curves **48***a* and **48***b* illustrated in Fig. 48 of the drawings. As shown by the curve **48***b* the voltage developed at the cathode terminal **1820***a* is reduced to its normal on-hook value during the open circuit period of each dial impulse dialed at the calling substation A. By reference to the curve **48***a* it will be noted that the voltage at the anode terminal **1819***a* rises to its normal on-hook value during the open circuit periods of the same dial impulses. During voice signal transmission from the substation A over the line **23**, the voice signals are reconstructed on an incremental or step-by-step basis so that the portion of the curves **48***a* and **48***b* representative of such signals are characterized by minute step-by-step variations. The signal voltages thus developed at the anode terminal **1819***a* of the tube **1806***a* are impressed upon the control grids of the tubes **940** and **1021** included in the tens and units sequence timing circuits **212** and **216**, respectively, over the conductor **240**. The signal voltage as reproduced at the cathode terminal **1820***a* of the tube **1806***a* is impressed upon the suppressor grid of the gating tube **1914** in the called line out gate circuit **224** over a path which includes the conductor **256** and the coupling condenser **2029**. This same voltage is impressed upon the control grid of the dial pulse integrator circuit **209** over a path which includes the resistor **2027**. It will thus be apparent that the signals developed at the calling substation A, including voice, switch directing and supervisory signals, are repeated negatively to the circuits **212** and **216** and are repeated positively to the circuits **224** and **209**.

In considering the operation of the dial pulse integrator circuit **209**, it is repeated that this circuit performs the function of increasing the discrimination between dial impulses and all other signals developed at the output side of the calling line reconstructor circuit **208**. Normally, i.e., when the connector **12***b* is not occupied with a call, operating anode potential for the integrator tube **2008** is withheld from the tube in the +B switching circuit **201** of the finder **12***a*. Also under normal conditions, the control grid of the tube **2008** has a negative potential thereon which serves to bias the tube beyond cutoff. More specifically, this grid is connected to the junction point between the two bleeder resistors **2027** and **2027***a* which are bridges across the negative 100 volt bias potential source in series with the cathode resistor **1825***a* of the cathode follower tube **1806***a*. Thus the net voltage across the series connected resistors **1825***a* and **2027** is negatively applied to the control grid of the tube **2008** through the rectifier **2026**. This voltage is sufficient to bias the tube **2008** beyond cutoff and thus prevent the tube from conducting when operating anode potential is applied to the tube anode from the conductor **12***c* through the resistor **2045**.

When the connector **12***b* is seized in the manner explained above, anode potential is impressed upon the integrator tube **2008** and the voltage across the cathode resistor **1825***a* rises substantially to the value *b* shown by the curve **48***b* in Fig. 48 of the drawings. This rise in voltage at the cathode terminal **1820***a* serves to reduce the bias on the control grid of the tube **2008** substantially to zero. As a consequence, the integrator tube **2008** starts to conduct

heavily, thereby to produce a voltage drop across the resistor **2045** which prevents the condenser **2025** from charging to any appreciable extent.

During the open circuit or break period of each impulse dialed at the calling substation A, the voltage at the cathode terminal **1820***a* of the tube **1806***a* is reduced to its on-hook value *a* in the manner shown by curve 48b in Fig. 48, with the result that current conduction through the resistor **2045** and the space current path of the tube **2008** is interrupted. As a consequence, the condenser **2025** is charged through the resistor **2045** at a rate determined by the time constant of this resistance-capacitance circuit. When the open circuit period of the dial impulse ends, the potential of the cathode terminal **1820***a* rapidly rises to the value *b* as shown by the curve 48*b*, thereby to reduce the bias on the control grid of the tube **2008** to zero and thus reinitiate current conduction through this tube. As a consquence, a low resistance discharge path through the tube **2008** is provided for the condenser **2025**. Accordingly, the condenser discharges to a very low voltage. The described cycle is repeated during each impulse dialed at the calling substation, with the result that a series of saw-tooth voltage pulses are developed across the condenser **2025**. The magnitude of each saw-tooth pulse is determined solely by the duration of the open circuit period of the corresponding dial impulse. Noise signals and hash developed at the output side of the reconstructor circuit **208** and more particularly at the cathode terminal **1820***a* of the tube **1806***a* during the open circuit periods of the dial impulses have no effect on the saw-tooth pulses produced across the condenser **2025** for the reason that during the dial break interval of each impulse the tube **2008** is biased beyond cutoff. Noise or voice signals and hash developed at the cathode terminal **1820***a* of the tube **1806***a* during the closed circuit or make periods of the dial impulses and before the dialing operation is completed are reduced in two ways. Thus, the rectifier **2026** prevents such signals of positive polarity which tend to drive the control grid of the tube **2008** positive relative to ground from reaching the control grid of the tube **2008**. Signals and hash of negative polarity produced at the cathode terminal **1820***a* before the dialing operation is completed and during dial impulse make periods cannot produce a voltage build up across the condenser **2025** simulating that which occurs during the break period of a dial impulse because of the relatively high frequency of such signal energy and the very rapid discharging of the condenser **2025** through the tube **2008** during these intervals.

The saw-tooth voltage pulses developed across the condenser **2025** during the dialing operation at the calling substation are positively applied to the control grid of the cathode follower tube **2009** and hence are reproduced across the series connected cathode load resistors **2046**, **2047** and **2048** of this tube. That portion of the voltage which is developed across the resistor **2048** is impressed upon the tens changeover gate circuit **210** over a path which includes the conductor **227** and the condenser **953**. That portion of the saw-tooth voltage developed across the two series connected resistors **2047** and **2048** during impulsing is impressed upon the units start gate circuit **213** over a path which includes the conductor **228** and the condenser **1805**. These voltages are obviously of different orders of magnitude and control the respective circuits **210** and **213** in the manner more fully described below.

In considering the manner in which the dial impulses reproduced by the dail impulse integrator circuit **209** during dialing of the first digit at the calling substation are repeated by the tens changeover gate circuit **210** to the tens digit register circuit **211**, it is pointed out that normally the timing tube **942** of the tens sequence timing circuit **212** is non-conductive, such that no current traverses the cathode resistor **949** and hence the cathode terminal of this resistor is at ground potential. As a consequence, the crystal gating rectifier **905** is unbaised and hence is operative to repeat negative pulses to the grid of the inverter tube **902**. Each saw-tooth pulse positively developed on the conductor **227** by the dial impulse integrator circuit **209** during an impulse dialed at the calling substation is differentiated in a circuit comprising the condenser **953** and the resistor **944** to produce a sharp negative pulse coincident with the start of each dial impulse make period. Each sharp negative pulse thus produced is impressed upon the grid resistor **906** through the gating crystal **905** and is thus applied to the control grid of the inverter tube **902** to decrease space current flow through this tube. As a consequence, the pulse is repeated as a positive pulse to the grid of the cathode follower tube **903** through the coupling condenser **902***a*. Each such positive pulse thus developed at the anode of the inverter tube **902** is also repeated to the control grid of the start tube **941** in the tens sequence timing circuit **212** over a path which includes the conductor **231** and the condenser **955**. Each pulse thus applied to the control grid of the cathode follower tube **903** is reproduced as a positive pulse across the cathode load resistors **961** and **962** in series and is applied to the common cathode conductor **230** of the tens digit register **911**. It will thus be understood that during the dialing of any tens digit, the tens changeover gate circuit **210** functions to repeat one short positive pulse to each of the tens sequence timing circuit **212** and the tens digit register circuit **211** coincidentally with the start of the make period of each dial impulse in the digit. In the particular call under consideration wherein the tens digit designation of the called line **32** is 3, three short positive pulses are repeated by the tens changeover gate circuit **210** to each of the circuits **211** and **212**.

In considering the operation of the tens digit register **211** to register the numerical value of any tens digit dialed at a calling substation, it will be understood from the foregoing explanation that this register is driven by the large positive pulses delivered thereto by the cathode follower tube **903** of the tens changeover gate circuit **210**. Specifically, the tubes of this register, other than the priming tube **904**, are connected to operate as a pulse counting chain, wherein the cathodes of all of the tubes **901**, **1002**, **1003**, etc., are all connected to the common driving conductor **230**, the anodes are all returned through suitable anode resistors **901***f*, **1002***f*, **1003***f*, etc., to the switched +B conductor **12***c*, the anode of each tube is capacitively coupled to the control grid of the next succeeding tube through a suitable coupling condenser **901***b*, **1002***b*, **1003***b*, etc., and the control grid of each tube is normally biased to a predetermined level from a common bias potential source. More specifically, the control grids of the tubes **901**, **1002**, **1003**, **1004**, etc., are normally biased, following seizure of the connector **12***b*, to a predetermined positive potential from the common potentiometer **1151** which is connected between the switched +B conductor **12***c* and ground in series with a fixed resistor **1154**. The potential extracted from this bias circuit and impressed upon the conductor **1152** common to the counting tubes is impressed upon the grids of these tubes through isolating resistors **921**, **901***c*, **1002***c*, **1003***c*, etc., individual to the tubes. As explained above, immediately the connector **12***b* is seized the priming tube **904** is fired to develop a substantial voltage drop across the series connected cathode load resistors **961** and **962** of the tube **903** so that the cathodes of the ten counting tubes **901**, **1002**, etc., are raised to a relatively high positive potential which is substantially greater than the difference between the positive potentials impressed upon the control grids of these tubes over the conductor **1152** from the potentiometer **1151** and the positive grid bias required to cause tube ionization. Thus the control grid of each counting tube is effectively biased below ignition potential with respect to the tube cathode immediately the connector **12***b* is seized and the priming tube **904** fires.

As previously explained, when the connector **12***b* is seized through the application of operating anode poten-

tial to the switched +B conductor **12***c*, the priming tube **904** is immediately fired to produce a voltage drop across the cathode load resistors **961** and **962** of the tube **903** which prevents ionization of the counting tubes in the tens digit register circuit **211**. It is also explained above that during the dialing of the tens digit, a large positive pulse is developed across the two cathode load resistors **961** and **962** at the start of the closed circuit or make period of each impulse. The first such pulse to appear across the two resistors **961** and **962** raises the positive potential of the common cathode conductor **230** and hence the cathode potential of the priming tube **904** to a value approximately equal to or greater than the anode potential of this tube, with the result that space current flow through the tube is interrupted. The large increase in the positive potential of the common cathode conductor **230** which occurs during the pulse also prevents any of the ten counting tubes of the register circuit **211** from firing. Immediately space current flow through the priming tube **904** is interrupted, the voltage drop across the anode resistor **909** disappears. As a result, the control grid potential of the tube **901** rises immediately and starts to decay at a rate determined by the time constant of the coupling circuit provided between the anode of the priming tube **904** and the control grid of the tube **901** and consisting of the coupling condenser **920** and the grid resistor **921**. The time constant of this circuit is long enough to hold the grid of the tube **901** considerably above its normal positive potential level after the described cathode driving pulse has terminated. Upon termination of the cathode driving pulse, the positive potential of the conductor **230** drops sharply and this potential drop coupled with the sustained increase in the positive potential of the control grid of the tube **901** causes the tube to fire. The resulting space current flow through this tube produces an increased current flow through the resistors **961** and **962** which again raises the positive potential level on the common cathode conductor **230**. Simultaneously, a voltage drop is produced across the anode resistor **901***f* of the tube **901** which lowers the positive potential on the control grid of second counting tube **1002**. The described potential level changes on the control grid and cathode of the tube **1002** coact to prevent this tube from firing. To summarize, it will be apparent that when the first pulse appears across the cathode load resistors **961** and **962** at the end of the open circuit period of the first impulse dialed at the calling substation, the priming tube **904** is deionized and the first counting tube **901** is fired to register the dial impulse.

The second impulse of the first or tens digit dialed at the calling substation results in the appearance of a second large positive pulse on the common cathode conductor **230**. The resulting rise in the positive potential of the common cathode conductor **230** serves to extinguish space current flow through the first counting tube **901** and to bias all of the counting tubes against ionization. Immediately space current flow through the tube **901** is arrested, current flow through the anode resistor **901***f* ends to increase the positive control grid potential of the second counting tube **1002** through the coupling network comprising the condenser **901***b* and the grid resistor **901***c*. Here again, the time constant of the described coupling circuit is long enough to maintain the control grid potential of the tube **1002** at a relatively high positive level after the positive pulse on the common cathode conductor **230** subsides. Accordingly, when the second pulse on the conductor **230** ends, the second counting tube **1002** is fired to produce space current flow therethrough which in traversing the anode resistor **1002***f* and the resistors **961** and **962** prevents ionization of the other counting tubes in the register circuit **211**. It will thus be apparent that the second impulse of the first digit dialed at the calling substation has the effect of extinguishing space current flow through the first counting tube **901** and firing the second counting tube **1002** to register the two impulses of the digit.

The manner in which one or all of the remaining eight counting tubes of the tens digit register **211** are successively fired as additional impulses of a given tens digit are dialed at the calling substation will be fully apparent from the explanation just given. Since this register circuit comprises ten counting tubes, it will be understood that the circuit is capable of registering the numerical value of any digit comprising from one to ten impulses. In the particular call under consideration wherein the called line **32** has a tens digit designation of 3, the third counting tube **1002** will of course be ionized in response to the third impulses of the digit and will remain conductive for the duration of the call. All other counting tubes of the tens digit register **211** remain non-conductive for the duration of the call.

Referring now more particularly to the manner in which the counting tubes of the tens digit register **211** selectively control the gating crystal rectifiers **901***d*, **1002***d*, **1003***d*, **1004***d*, etc., to gate to the connector pulse forming circuit **217** only those tens pulses which occur in the tens time pulse position assigned to a particular called line, it is first pointed out that when the link **12** is not in use, the described rectifiers have no biasing potentials impressed upon the electrodes thereon. Specifically, the cathode terminals of these rectifiers are all connected to the +B switching conductor **12***c* over paths individual thereto. Thus the cathode terminal of the pulse gating rectifier **1003***d* associated with the third counting tube **1003** is connected to the conductor **12***c* through the resistors **1003***a* and **1003***f*. The anode terminals of the rectifiers are commonly connected to the +B switching conductor **12***c* through the resistor **1153**. Thus the anode and cathode terminals of each of the identified pulse gating rectifiers are both connected to the same conductor and are at the same potential. With negative tens gating pulses being sequentially applied to the conductors **33***a*, **33***b*, **33***c*, etc., from the tens pulse ring circuit **21**, these pulses are sequentially impressed on the cathode terminals of the tens pulse gating rectifiers through the coupling condensers **901***e*, **1002***e*, **1003***e*, etc. As a consequence, each crystal conducts each pulse impressed thereon until the associated coupling condenser is charged to the peak potential of the pulses impressed on the cathode terminal thereof. Thus with the connector **12***b* inactive, the gating rectifier **1003***d* passes tens pulses impressed upon the cathode terminal thereof through the condenser **1003***e* until this condenser is charged to the peak pulse value. When the condenser **1003***e* is thus charged, it holds its charge during the off pulse periods and the resulting voltage thereacross serves to bias the rectifier **1003***d* against current conduction. It will thus be apparent that when the connector **12***b* is in active, all ten of the pulse gating rectifiers **901***d*, **1002***d*, **1003***d*, etc., are biased against pulse transmission therethrough. As a consequence, the tens pulses sequentially developed on the conductors **33***a*, **33***b*, **33***c*, etc., are prevented from appearing on the pulse output conductor **232** of the register circuit **211**. The same condition exists after the finder **12***a* functions in the manner explained above to impress operating anode potential upon the +B switching conductor **12***c* incident to seizure of the link **12**, except that the described coupling condensers **901***e*, **1002***e*, **1003***e*, etc., become charged to the positive level of the potential impressed upon the conductor **12***c* plus the peak potential value of the pulses appearing on the conductors **33***a*, **33***b*, **33***c*, etc. In other words, the gating rectifiers **901***d*, **1002***d*, **1003***d*, etc., remain biased against tens pulse transmission therethrough after the link **12** is seized but before the dialing operation is started at the calling substation.

At the end of the first digit dialed at the calling substation A, the counting tube **1003** is ionized in the manner pointed out above. As a consequence, the anode

potential of this tube is decreased to a value lower than the positive potential of the +B switching conductor 12*c*. The resulting polarity reversal of the potentials on the anode and cathode terminals of the gating rectifier 1003*d* biases this rectifier conductive, thereby to cause current flow therethrough over a path which extends from the conductor 12*c* by way of the resistor 1153, the rectifier 1003*d*, the resistor 1003*a*, the space current path of the tube 1003 and the resistors 961 and 962. Thus the rectifier 1003*d* is biased to permit tens pulse transmission therethrough. As a consequence, negative tens pulses appearing on the conductor 33*c* in the third tens pulse position of each pulse frame are gated by the rectifier 1003*d*, appear on the pulse output conductor 232 of the circuit 211, and are impressed upon the connector pulse forming circuit 217. Current flow through the resistor the resistor 1153 and the rectifier 1003*d* also has the effect of lowering the potential on the common anode terminal conductor of the ten rectifiers 901*d*, 1002*d*, 1003*d*, etc., to a value such that the other nine rectifiers are almost completely nonconductive. As a result, only the third tens pulse of each pulse frame is permitted to appear on the pulse output conductor 232 along with slight base line disturbances caused by the other nine tens pulses of each pulse frame. Thus, it will be understood that in the particular case under consideration the tens digit register 211 is controlled in accordance with the numerical value of the tens digit 3 dialed at the calling substation to select the third tens pulse of each pulse frame for transmission to the connector pulse forming circuit 217.

Referring now to the manner in which dial tone signal transmission to the calling substation is terminated when the dialing operation is started at this substation, it is pointed out above that the priming tube 904 of the tens digit regiser 211 is deionized in response to dialing of the first impulse of the first digit at the calling substation. When current flow through this tube and the resistors 961 and 962 is thus arrested, the voltage drop across these two resistors is substantially decreased to decrease the positive potential level on the common cathode conductor 230. This potential decrease is thereafter maintained since the magnitude of current flow through any one of the ten cold cathode counting tubes 901, 1002, 1003, etc., is appreciably lower than the current flow through the hot cathode priming tube 904. When the positive potential level on the conductor 230 is thus reduced, the negative bias on the control grid of the dial tone gate tube 2003 rises to a value well beyond cutoff value of this tube, thereby to render the tube nonconductive. As a consequence, the tube is blocked against repeating the dial tone signal continuously developed on the conductor 47 by the dial tone generator 29*c* to the calling line out gate circuit 226. Thus, dial tone signal transmission to the calling substation is arrested.

Referring now more particularly to the tens sequence timing circuit 212, it is again pointed out that this circuit controls the tens changeover gate circuit 210 and the units start gate circuit 213 in such manner that the pulses developed during dialing of the first digit are directed to the tens digit register 211 in the manner just explained, the tens digit register 211 is rendered inactive at the end of the first digit, and the pulses developed during dialing of the second digit are directed to the units digit register 215. To these ends, the control grid potential of the discharge tube 940 embodied in the tens sequence timing circuit 212 is controlled in accordance with the potential at the anode terminal 1819*a* of the calling line reconstructor circuit 208 and the control grid potential of the start tube 941 is coupled to receive positive pulses delivered thereto from the anode of the inverter tube 902 in the manner explained above. Before describing the operation of the timing circuit 212 to perform the indicated functions, it is pointed out that normally the control grid of the tube 940 is biased to the ground potential level from a biasing circuit which includes the resistor 943, the conductor 240, the resistor 1827*a* and the resistor 1828*a*. However, when the potential level of the tube anode terminal 1819*a* is reduced to the off hook value shown in Fig. 48 in response to seizure of the link 12, the accompanying increase in the voltage across the anode resistor 1828*a* has the effect of increasing the bias on the control grid 940 in a negative sense until this tube is biased beyond cutoff. Normally the start tube 941 is deionized, the control grid of this tube being biased to a high negative value by the potential supplied thereto from a bleeder circuit consisting of the two resistors 963 and 964. The timing tube 942 is also normally deionized.

In considering the operation of the timing circuit 212, it will be recalled from the preceding description of the tens changeover gate circuit 210 that during the first impulse of the first digit dialed at the calling substation, a large positive pulse is impressed upon the conductor 231 at the anode of the inverter tube 902. This pulse as impressed upon the control grid of the start tube 941 through the condenser 955 has the effect of firing this tube, following which the control grid of the tube loses control in the usual manner. When current conduction through the tube 941 is thus established, the voltage drop through the tube drops to a very low value, so that substantially the full voltage of the +B switching conductor 12*c* appears across the cathode resistor 965 of this tube. Specifically, approximately 130 volts of the available 140 volt potential appears across the resistor 965. This voltage is impressed upon the condenser 948 through the resistor 947 and also across the space current path of the discharge tube 940. Concurrently with firing of the start tube 941, the positive potential level of the terminal 1819*a* in the calling line reconstructor circuit 208 rises to the on hook value shown by the curve 48*a* in Fig. 48 of the drawings. As a consequence, the tube 940 is rendered conductive so that the anode-cathode space current path thereof acts as a low resistance shunt across the condenser 948. Accordingly, the voltage across the cathode resistor 965 is prevented from charging the condenser 948 to any appreciable extent. However, when the open circuit period of the dial impulse ends, the potential level of the terminal 1819*a* drops to the off hook value indicated by the curve 48*a* in Fig. 48 with the result that the tube 940 is again biased beyond cutoff and the anode-cathode resistance of the tube rises to a very high value. As a consequence, the condenser 948 starts to charge up to the voltage across the cathode resistor 965 at a rate determined by the time constant of the circuit consisting of this condenser and the charging resistor 947. By suitably proportioning the capacitance and resistance values of these two circuit elements, the time constant of the circuit is made long enough so that the potential at the upper terminal of the condenser 948 does not rise to a sufficiently high positive value to effect ionization of the timing tube 942 during the closed circuit period of a dial impulse. Immediately the open circuit period of the second impulse starts, the potential level of the terminal 1819*a* again rises to its on hook value to render the discharge tube 940 conductive, with the result that the condenser 948 is rapidly discharged through the tube 940 to a very low voltage. It will thus be understood that during the arrival of successive impulses of the first digit at the connector 12*b*, the discharge tube 940 is controlled by the calling line reconstructor circuit 208 to prevent the condenser 948 from charging to a level at which firing of the timing tube 942 can occur.

In the specific call considered in the preceding description, i.e., that initiated at the substation A and intended for the substation B, the first digit comprises three impulses with the result that the tube 940 functions to discharge the condenser 948 twice. However, at the end of the third impulse and during the interdigit pause

between the first and second digits which is of substantially greater duration than the closed circuit period of each dial impulse, the condenser **948** is permitted to charge through the resistor **947** to substantially the full voltage across the resistor **965**. As a result, the control grid potential of the tube **942** is driven positive to a value at which ionization of this tube occurs. Once, the tube **942** is thus fired, the control grid thereof loses control. It will be understood, therefore, that at the end of the first digit dialed at the calling subtsation the two tubes **941** and **942** are both ionized and remain conductive for the duration of the call.

When current conduction through the tube **942** is initiated in the manner just explained, the resulting current flow through the resistors **968** and **949** has the effect of decreasing the positive potential level of the tube anode and increasing the positive potential level of the tube cathode. The positive potential developed at the cathode terminal of the resistor **949** is impressed upon the cathode terminal of the crystal rectifier **905** over a path which includes the decoupling resistors **946** and **944** and the conductor **234**. This potential serves to bias the rectifier **905** against current conduction therethrough. As a result, further pulses developed across the cathode load resistors of the tube **2009** in the dial impulse integrator circuit **209** during dialing of the second and any additional digits at the calling substation are blocked against transmittal through the tens changeover gate circuit **210** to the tens digit register **211**. The potential developed at the anode of the tube **942** is impressed upon the cathode terminal of the pulse gating rectifier **1803** in the units start gate circuit **213** over a path which includes the resistors **967** and **969** and the conductor **235**. When the timing tube **942** fires to decrease the potential at the anode of the tube **942**, the polarity of the voltage across the rectifier **1803** is reversed to render this rectifier conductive and thus condition the same to transmit pulses through the gating rectifier **915** to the control grid of the inverter tube **912** in the units changover gate circuit **214** during the dial of the second digit at the calling substation. Thus the tens sequence timing circuit **212** operates during the interdigit pause separating the first and second digits to block the tens changeover gate circuit **210** against repeating pulses to the tens digit register **211** during dialing of the second digit and to condition the units start gate circuit **213** to repeat pulses to the units changeover gate circuit **214** during the second digit.

As indicated above, the purpose of the units start gate circuit **213** is that of preventing the positive pulses developed across the load resistors **2047** and **2048** of the dial impulse integrator circuit **209** during dialing of the first digit at the calling substation from reaching the control grid of the inverter tube **912** in the units changeover gate circuit **214**. To this end, the anode terminal of the gating rectifier **1803** is, following seizure of the connector **12*b***, biased to a positive potential of approximately 31 volts from a bleeder circuit consisting of the resistors **1801** and **1804** connected in series between the +B switching conductor **12*c*** and ground. The cathode potential of the crystal rectifier **1803**, on the other hand, is maintained at a potential of approximately 75 volts positive with respect to ground, this potential being impressed thereon over a path including the conductor **235** and the resistor **969** from a bleeder circuit consisting of the resistors **966**, **967** and **968** connected in series between the negative terminal of the bias potential source and the +B switching conductor **12*c***. Thus the crystal rectifier **1803** is biased against pulse transmission therethrough following seizure of the connector **12*b*** and throughout dialing of the first digit at the calling sub-station. When the timing tube **942** is rendered conductive at the end of the first digit in the manner explained above, the potential on the cathode terminal of the rectifier **1803** is reduced to a value of approximately five volts positive with respect to ground, thereby to reverse the polarity of the voltage across this rectifier and thus render the rectifier operative to transmit pulses therethrough.

During dialing of the second digit, the positive saw-tooth pulses developed across the load resistors **2047** and **2048** of the dial impulse integrator circuit **209** at the rate of one such pulse for each dial impulse are each differentiated in a differentiating circuit comprising the condenser **1805**, the conductor **235** and the resistor **969**, and then gated by the rectifier **1803**. The resulting sharply defined negative pulses are impressed upon the control grid of the inverter tube coincident with the trailing edges of the saw-tooth pulses produced by the dial impulse integrator circuit **209** over a path which includes the conductor **241** and the crystal rectifier **915**.

In general, the operation of the units changeover gate circuit **214** to repeat pulses representative of the impulses of the second digit to the units digit register **215** is the same as the operation of the tens changeover gate circuit **210** to repeat the pulses representative of the impulses of the first digit to the tens digit register **211**. More specifically considered, the right anode terminal of the crystal rectifier **915** is normally at ground potential by virtue of the conductive path to ground afforded by the grid resistor **916**. The cathode terminal of the rectifier **915**, on the other hand, is biased slightly negative with respect to ground by virtue of the negative potential impressed thereon over the conductor **241** and through the resistor **1941** from a bleeder circuit consisting of the series connected resistors **1028**, **1051** and **1053**. This slight negative bias on the cathode terminal of the rectifier **915** renders the rectifier more heavily conductive and hence prevents this element from unduly attenuating the pulses transmitted therethrough to the control grid of the inverter tube **912**. Higher pulse voltage input to the circuit **213** and less attenuation through the rectifier **915** are required in the case of the pulses representative of the impulses of the second digit, since these pulses are required to traverse an additional gating rectifier **1803** and an added coupling condenser **1802** during transmission from the circuit **209** to the circuit **214**. Each negative pulse impressed upon the amplifier and inverter tube **912** through the pulse gating rectifier **915** during dialing of the second digit at the calling substation is amplified and inverted by this tube and impressed upon the control grid of the cathode follower tube **913** through the coupling condenser **971**. The resulting positive pulses developed across the cathode load resistors **969*a*** and **970** of the tube **913** are impressed upon the common cathode conductor **236** of the units digit register **215** to drive this register in the manner described below. The positive pulses developed at the anode of the amplifier and inverter tube **912** are impressed upon the control grid of the start tube **1020** in the units sequence timing circuit **216** over a path which includes the conductor **237** and the coupling condenser **972**. Thus the pulses transmitted to the units changeover gate circuit **214** during the dialing of the second digit at the calling substation are repeated by this gate circuit both to the units digit register **215** and the units sequence timing circuit **216**.

The manner in which the units digit register **215** responds to the pulses repeated thereto by the units changeover gate circuit **214** is exactly the same as the above-described response of the tens digit register **211** to the pulses repeated thereto by the tens changeover gate circuit **210**. From this explanation, it will be understood that the first positive pulse, i.e., that representative of the first dial impulse of the second digit, developed across the load resistors **969*a*** and **970** has the effect of extinguishing current flow through the priming tube **914**, and that at the end of the pulse the first counting tube **911** is fired. It will also be understood that if successive pulses each representative of another dial impulse are developed across the load resistors **969*a*** and **970**, the counting tubes of the units digit register **215** are ionized in sequence at the rate of one counting tube for each dial

impulse. Thus the second pulse produced across the load resistors 969*a* and 970 has the effect of extinguishing the counting tube 911 and causing the second counting tube 1012 to fire, the third pulse to appear across the resistors 969*a* and 970 has the effect of deionizing the second counting tube 1012 and causing the third counting tube 1013 to fire, and so on. In the particular call under consideration, i.e., that involving the substation B as the called substation, wherein the numerical value of the second digit is 2, the second counting tube 1012 remains conductive at the end of the digit. With this tube conducting, the polarities of the potentials respectively impressed upon the anode and cathode terminals of the pulse gating rectifier 1012*d* are such that this rectifier is rendered operative to transmit negative units pulses appearing on the units pulse conductor 30*b* over the conductor 245 to the connector pulse forming circuit 217. Since the second counting tube 1012 of the units digit register 215 remains conductive for the duration of the call, negative units pulses developed on the conductor 30*b* by the units pulse ring circuit 20 are likewise gated to the connector pulse forming circuit 217 through the crystal 1012*d* for the duration of the call.

Referring now more particularly to the units sequence timing circuit 216, it will be recalled that this circuit is provided to block the units changeover gate crcuit 214 against pulse transmission therethrough after the second digit is terminated. It also performs certain other functions described more fully below including that of initiating the line busy test operation, i.e., the operation of testing the time position of the selected called line to determine whether the line is idle or busy. In general, the circuit 216 operates in exactly the same manner as the tens sequence timing circuit 212. Thus the discharge tube 1021 is controlled in parallel with the discharge tube 940 from the anode terminal 1819*a* of the calling line reconstructor circuit 208 over the conductor 240 so that it is only rendered conductive during the open circuit period of each impulse dialed at the calling substation. Due to the action of the units start gate circuit 213 to prevent pulses from reaching the control grid of the amplifier and inverter tube 912 while the first digit is being dialed at the calling substation, no pulses are impressed upon the control grid of the start tube 1020 during this digit. However, the first pulse repeated by the tube 912 during the second digit is applied to the control grid of the start tube 1020 over the coupling path comprising the conductor 237 and the condenser 972 and has the effect of firing the tube 1020. After this tube fires to produce a large voltage drop across its cathode load resistor 1054, the discharge tube 1021 responds to the pulses repeated thereto from the anode terminal 1819*a* of the cathode follower tube 1806*a* in the calling line reconstructor circuit 208 to prevent the condenser 1027 from charging to a potential which will effect firing of the timing tube 1022 until after the digit is ended. However, when the second digit ends to end the transmission of pulses to the control grid of the discharge tube 1021 from the calling line reconstructor circuit 208, the condenser 1027 charges through the resistor 1026 to the voltage across the resistor 1054 and in so doing drives the grid of the timing tube 1022 sufficiently positive to cause this tube to fire. When the tube 1022 is thus rendered conductive, the resulting heavy current flow through the cathode load resistors 1052 and 1053 thereof has the effect of raising the positive potential of the tube cathode to a value of approximately 130 volts to materially increase the positive potential level of the junction point between the two resistors 1052 and 1053. As a consequence of the increased voltage drop across the resistor 1053, the cathode terminal of the rectifier 915 is driven positive relative to the rectifier anode terminal over the described biasing path comprising the resistors 1051 and 1941 and the conductor 241, thereby to bias this rectifier against further pulse transmission therethrough. It other words, the rectifier 915 is biased to prevent any further signals of whatever charcter developed at cathode resistors 2047 and 2048 of the tube 2009 from reaching the control grid of the amplifier and inverter tube 912. The positive potential developed at the cathode terminal of the timing tube 1022 incident to firing of this tube is impressed upon the circuits 217, 218 and 219 over a path which includes the resistor 1055 and the conductor 242. Since the two tubes 1020 and 1022 remain conductive for the duration of the call, it will be understood that the positive control potential impressed upon the conductor 242 remains on this conductor until the connector 12*b* is released, and further that the crystal rectifier 915 remains blocked against signal transmission therethrough for the duration of the call.

Referring now more particularly to the connector pulse forming circuit 217, it will be recalled that this circuit is provided to combine the selected tens pulse gated by the tens digit register 211 with one of the units pulses gated by the units digit register 215 to form a single connector pulse which occurs in the time position of each pulse frame assigned to the called line. The connector pulses thus formed are utilized to control the busy test circuit 218, the busy gate circuit 220, the called line in gate circuit 223 the called line reconstructor circuit 222, and the called line out gate circuit 224 in the performance of the functions respectively assigned to these circuits. Operation of the connector pulse forming circuit 217 may best be explained by reference to the particular call considered throughout this specification, namely the call originating at the substation A and intended for the substation B. In this case and as explained above, the tens digit register 211 is controlled by the first digit dialed at the calling substation to select the third tens pulse 74*a* of each pulse frame and to gate this pulse over the the conductor 232 to the connector pulse forming circuit 217. The units digit register 215 is controlled by the second digit dialed at the calling substation to select the 2nd, 12th, 22nd, etc., units pulses 63*a*, 63*b*, 63*c*, etc., of each pulse frame and to gate these pulses over the conductor 245 to the connector pulse forming circuit 217.

Normally both of the pulse combining tubes 1023 and 1024 are heavily conductive by virtue of the positive potentials impressed upon the control grids thereof through the current limiting resistors 1029 and 1030 respectively. The inverter tube 1161 is also normally heavily conductive by virtue of the positive potential impressed upon the control grid thereof through the current limiting resistor 1185. The clipping tube 1025, on the other hand, is normally biased beyond cutoff by the bias potential impressed upon the control grid thereof from the potentiometer 1033 through the resistor 1056. This potentiometer is included in a bleeder circuit which also comprises the resistors 1034 and 1055 and the cathode load resistors 1052 and 1053, those five series connected resistors being connected in series between the grounded terminal of the bias potential source and the negative terminal of this source. Thus the clipping tube 1025 is normally biased against repeating connector pulses to the inverter tube 1161. When, however, the timing tube 1022 is rendered conductive to produce a large voltage drop across the cathode load resistors 1052 and 1053 of this tube the bias level on the control grid of the clipping tube 1025 is reduced to render this tube pulse conductive in the manner more fully explained below.

In considering the operation of the circuit 217, it is first pointed out that the clipping circuits respectively comprising the crystal rectifiers 1036 and 1037, the resistors 1038 and 1040, the condensers 1039 and 1041, the resistors 1029 and 1030 and the grid-cathode paths of the tubes 1023 and 1024 function to clip the positive parts of the waves, including base line "hash," from the signals received from the two registers 211 and 215, so that the two tubes 1023 and 1024 will amplify and repro-

duce only the chosen tens and units pulses at the output sides thereof. Base line "hash" is made up of two principal components, namely noise components from the gas tubes included in the two registers **211** and **215** and noise components resulting from partial leakage of unwanted tens and units pulses through the gating crystal rectifiers respectively controlled by the tens and units digit register tubes due to lack of sufficient back resistance through these rectifiers. This "hash," if allowed to pass through the connector pulse forming circuit **217**, would continue through the system and be reproduced as noise by the telephone receiver at the called substation. The manner in which the described clipping circuits function to prevent the base line "hash" of the signals produced on the conductors **233** and **245** from being reproduced at the output sides of the pulse combining tubes **1023** and **1024** is explained more fully below with reference to Figs. 49 to 53, inclusive, of the drawings.

The pulse combining tubes **1023** and **1024** function to combine the selected tens pulse with one of the ten selected units pulses of each pulse frame through the use of a common anode circuit including a common load resistor **1031**. Specifically, each negative tens pulse appearing on the conductor **232** has the effect of biasing the tube **1023** beyond cutoff and thus arresting space current flow through the tube **1023** for the duration of the pulse. Similarly, each negative units pulse gated to the conductor **245** by the register **215** has the effect of cutting off space current flow through the tube **1024**. By utilizing pulses of sufficient amplitude to drive the tubes **1023** and **1024** beyond cutoff, any noise components on the tops of the pulses are clipped off and are not reproduced at the output sides of these tubes. It will thus be understood that space current flow through the tube **1023** is cut off during the third tens time position of each pulse frame whereas space current flow through the tube **1024** is cut off during the 2nd, 12th, 22nd, 32nd, etc., units pulses of each pulse frame. As a consequence, the potential at the common anode terminal **1057** of the two pulse combining tubes is varied in the exact manner shown by the curve A in Fig. 44 of the drawings except for the relative time positions of the pulses.

All of the pulses developed at the common anode terminal **1057** are impressed upon the control grid of the clipping tube **1025** through the coupling condenser **1032**. After the timing tube **1022** has fired to decrease the negative bias on the control grid of the clipping tube, this tube is biased beyond cutoff by a value just exceeding the amplitude of the tens and units pulses alone in the manner generally illustrated by the curve B in Fig. 44 of the drawings. Thus only the units pulse portion of each composite pulse has the effect of driving the grid of the tube **1025** into the conductive region of the tube. In other words, the clipping tube **1025** is controlled to draw current only during the units pulse period of each composite pulse developed at the common anode terminal **1057**. This pulse period obviously occurs in the time position assigned to the called line, i.e., the time position *63c* in the particular call under consideration. Thus connector pulses occurring in the time position assigned to the called line are developed as negative pulses at the anode of the clipping tube **1025** at a rate of one pulse for each pulse frame. At this point, the importance of biasing the clipping tube **1025** substantially beyond cutoff to prevent pulses from being developed at the anode thereof until after the second digit ends becomes apparent. Thus the tens pulses gated by the tens digit register **211** are reproduced at the anode of the tube **1023** immediately the first digit ends and before the second digit is dialed. Moreover, during the dialing of the second digit, units pulses are successively gated to the connector pulse forming circuit **217** by the gating circuits respectively controlled by the tubes **911**, **1012**, **1013**, etc., as the first, second, third, etc., impulses of the second digit are dialed into the connector **12b**. These units pulses are, of course, combined with the tens pulses gated to the circuit **217** from the tens digit register **211** and, but for the heavy bias potential on the control grid of the tube **1025**, would be reproduced at the anode of this tube to cause trouble in the circuits controlled by the connector pulse forming circuit **217**. However, by blocking the tube **1025** against pulse reproduction until after the second digit is ended, the connector pulse forming circuit **217** is prevented from developing connector pulses until both the tens and units time positions designating the called line are fully selected.

The connector pulses produced at the anode of the tube **1025** in the manner just explained are of negative polarity. They are impressed upon the control grid of the amplifier and inverter tube **1161** through the coupling condenser **1035** and appear in amplified form as positive pulses at the anode of this tube. Thus each pulse serves to decrease current flow through the anode resistor **1187** and the peaking coil **1186**, thereby to increase the positive potential level at the anode of the tube **1161**. The coil **1186** is tuned to resonance at a frequency of approximately 5 megacycles and is provided to prevent distortion of the connector pulses as reproduced at the anode of the tube **1161**. These connector pulses are distributed over the conductor **239** to the called line in gate circuit **223**, the called line out gate circuit **224**, the busy test circuit **218**, the busy gate circuit **220**, and the called line reconstructor circuit **222**.

In order to explain the manner in which the clipping circuits respectively comprising the rectifiers **1036** and **1037** function to clip base line "hash" from the tens and units pulses reproduced at the anodes of the pulse combining tubes **1023** and **1024**, reference is made to Figs. 49 to 53, inclusive, of the drawings. Aside from the constants of the circuit components embodied in the two clipping circuits, these circuits are identical. Accordingly, the operation thereof will be explained with reference to the clipping circuit comprising the rectifier **1036**. The voltage input E_{in} to this circuit is graphically illustrated in Fig. 50 as being a positive voltage which is decreased from the value E_1 to the value E_2 for the interval t_1 of each tens pulse **74***a* gated by the rectifier **1003***d*. Successive pulses are separated by the interval t_2. The voltage E_{in} is impressed upon the clipping circuit comprising the rectifier **1036**, which is shown in equivalent form in Fig. 49. In the equivalent circuit there shown, the control grid and cathode of the tube **1023** are disclosed as a diode rectifier D_2 and the crystal rectifier **1036** as a diode rectifier D_1. The other components shown in Fig. 49 will be readily identified as components of the pulse combining circuit **217** by reference to Fig. 10 of the drawings.

Referring now more particularly to Figs. 49 and 50, it may first be assumed that when E_{in} has the value E_1, E_{out} is zero if the diode D_2 is also assumed to be a perfect diode such that it passes current from the source E_3 through the resistor R_2 to ground and has no appreciable voltage drop thereacross. With this condition prevailing, current flows from the circuit point A through the resistor R_1 to the circuit point B and thence through the condenser C to charge the condenser. Moreover, if sufficient time elapses with this condition undisturbed, the condenser C will charge to the voltage level E_1, at which time current flow through the condenser C is arrested.

Assume now that after the condenser C has charged to a voltage E_0 equal to E_1, the voltage E_{in} is suddenly changed to the value E_2 at the start of a tens pulse **74***a* in the manner shown in Fig. 50. When this occurs, the voltage E_0 exceeds the voltage E_{in} so that the diode D_1, which has no appreciable resistance in the forward direction, is rendered conductive to bring the circuit point B down to the voltage level E_2. At this instant the circuit point D is at a potential lower than the voltage level E_2 by an amount E_0 or E_1 equal to the voltage drop across the condenser C. This brings the circuit point D to a potential level of $E_2-E_1=-A$ volts. Thus the polarity of

the voltage across the diode D_2 is reversed to stop current conduction through this diode. In other words, the control grid of the tube **1023** is driven negative relative to the tube cathode to stop grid current flow through the tube at the beginning of the pulse.

So long as the tens pulse persists the input voltage E_{in} remains at the value E_2. During this interval, the condenser C discharges to ground through the diode D_1 and the impedance of the source E_{in}. If the pulse interval t_1 were sufficiently long, the condenser C would discharge to a voltage E_0 equal to the voltage E_2, at which time the diode D_2 would again start to conduct current from the source E_3 and the input voltage E_{in} would just balance the condenser voltage E_0. Should this occur, the voltage E_{out} would again be reduced to zero. If the voltage E_{in} should now change from the value E_2 back to the value E_1, the condenser C would recharge through the resistor R_1 and the diode D_2 back to the voltage level E_1.

Assume now that the input voltage E_{in} changes on a repetitive basis and in the manner shown in Fig. 50 from the value E_1 to the value E_2 and back to the value E_1 so rapidly that the change on the condenser C and hence the voltage E_0 thereacross does not have time to change appreciably. Under this assumption the problem resolves itself to one of finding out whether the voltage E_0, which exists when the repetitively pulsed input voltage E_{in} is applied to the circuit, can be made to assume an equilibrium value somewhere between the values E_1 and E_2. To solve this problem reference is made to the equivalent circuits shown in Figs. 51 and 52, which show the conditions existing in the circuit of Fig. 49 when the input voltage E_{in} has the values E_1 and E_2, respectively. Referring to Figs. 51 and 52, if E_1, E_2, E_3, and the condenser voltage E_0 does not change appreciably during the intervals t_2 and t_1, then

(1) $$i_c=\frac{E_1-E_0}{R_1}$$

and

(2) $$i_d=\frac{E_3+E_0-E_2}{R_2}$$

and the charges entering and leaving the condenser C during these intervals are as follows:

(3)

$$Q_c=\left(\frac{E_1-E_0}{R_1}\right)t_2$$

=charge entering condenser C during each interval t_2

and

(4)

$$Q_d=\left(\frac{E_3+E_0-E_2}{R_2}\right)t_1$$

=charge leaving condenser C during each interval t_1

Obviously, the voltage E_0 across the condenser C can remain constant over a period of time only if the charge going into the condenser equals the charge coming out of the condenser. Thus to have a constant equilibrium value of E_0, the charge Q_c must equal Q_d. From Equations 3 and 4, therefore,

(5) $$\left(\frac{E_1-E_0}{R_1}\right)t_2=\left(\frac{E_3+E_0-E_2}{R_2}\right)t_1$$

as shown in Fig. 50, let

(6) $$E_a=E_1-E_2$$

and

(7) $$E_c=E_1-E_0$$

(8) $$E_1=E_a+E_2$$

(9) $$E_1=E_c+E_0$$

(10) $$E_a+E_2=E_c+E_0$$

and

(11) $$E_0-E_2=E_a-E_c$$

Substituting these values to eliminate E_0, E_1 and E_2 from Equation 5:

(12) $$\left(\frac{E_c}{R_1}\right)t_2=\left(\frac{E_3+E_a-E_c}{R_2}\right)t_1$$

or

(13) $$E_cR_2t_2=(E_3+E_a-E_c)R_1t_1$$

or

(14) $$E_cR_2t_2=E_3R_1t_1+E_aR_1t_1-E_cR_1t_1$$

or

(15) $$E_cR_2t_2+E_cR_1t_1=E_3R_1t_1+E_aR_1t_1$$

or

(16) $$E_c(R_2t_2+R_1t_1)=(E_3+E_a)R_1t_1$$

and

(17) $$E_c=\frac{(E_3+E_a)R_1t_1}{R_2t_2+R_1t_1}$$

If the value of E_3 is zero, then Equation 17 reduces to

(18) $$E_c=\frac{E_aR_1t_1}{R_2t_2+R_1t_1}=E_aK$$

From Equation 18 it is clear that the voltage E_c is directly proportional to the pulse amplitude E_a.

It is also apparent from the above analysis that the condenser voltage E_0 can reach an equilibrium value between the values E_1 and E_2 by properly relating the resistance values R_1 and R_2 to the established time intervals t_1 and t_2. With these conditions established, it can readily be shown how the circuit of Figs. 10 and 50 functions to clip the upper positive portion of the signal input wave form, including any noise components or base line hash which may form a part thereof. Thus by again referring to Fig. 49, when E_{in} is positive, i.e., has the value E_1, the diode D_2 conducts but since E_1 is greater than the equilibrium value of E_0 as shown in this figure, the diode D_1 does not conduct, so that the difference between the voltages E_1 and E_0 appears across the resistor R_1. At this value of E_{in}, the voltage E_{out}, i.e., that determining the magnitude of space current flow through the tube **1023**, is zero. However, when E_{in} is negative, i.e., has the value E_2, the diode D_1 conducts due to the voltage E_1 being greater than the equilibrium value of the condenser voltage E_0, thus driving the anode of the diode D_2, i.e., the control grid of the tube **1023**, negative by an amount equal to the difference between the values E_0 and E_2. As a consequence, the diode D_2 is rendered nonconductive so that the output voltage E_{out} assumes a finite value equal to E_0 minus E_2 in the manner shown in Fig. 50. As shown in Fig. 53, this output voltage E_0 is equal to the voltage value E_a minus the voltage value E_c. Thus it will be apparent that when the condenser C is made to have an equilibrium voltage thereacross having a value intermediate the values E_1 and E_2, all portions of the signal input voltage E_{in} having potential values in excess of the equilibrium condenser voltage value E_0 are clipped and hence are not reproduced at the anode of the tube 2023.

From Equation 18 it will be apparent that the magnitude of the clipping voltage E_c is determined solely by the resistance values R_1 and R_2, the time values t_1 and t_2, and the tens pulse amplitude E_a when the voltage E_3 is zero. On the other hand and as will be apparent from Equation 17, when the voltage E_3 is large in comparison with E_{in}, the clipping level E_c becomes substantially independent of the tens pulse amplitude and depends only on the value of E_3, the resistance values R_1 and R_2 and the time values t_1 and t_2. This is true of the clipping circuits shown in Fig. 10 of the drawings. More specifically, the parameters R_1 and R_2 (the resistance values of

the resistors **1038** and **1029**, for example) are so proportioned in each of the clipping circuits of Fig. 10 that the equilibrium condenser voltage E_0 is made as high as possible while preventing reproduction of noise signals or tens pulse base line hash at the anodes of the pulse combining tubes **1023** and **1024**.

Referring now more particularly to the busy test circuit **218**, it will be recalled that this circuit performs the function of comparing the time position of the connector pulses developed by the connector pulse forming circuit **217** with the time positions of busy pulses which may be present on the busy conductor **52** to determine whether or not the called line is idle or busy. In the event the called line, i.e., the line **32** is idle, coincidence is lacking between the time position **63c** of the connector pulses produced by the circuit **217** and the time position occupied by any of the busy pulses present on the busy conductor **52**. In such case the circuit **218** functions to prevent the busy lock circuit **219** from operating and also to initiate operation of the ringing facilities provided in the line circuit terminating the called line. On the other hand, if the connector pulses developed by the connector pulse forming circuit **217** coincide in time position with busy pulses present on the busy conductor **52**, an indication is provided that the called line is busy. In such event the busy test circuit **218** does not operate, but permits the busy lock circuit **219** to operate and lock the connector **12b** in its line busy setting.

In considering the operation of the busy test circuit **218**, it will be noted that busy pulses developed on the busy conductor **52** in each of the busy finders and connectors of the system are impressed upon the control grid of the inverter tube **1163** in a positive sense through the coupling condenser **1188**. These pulses are amplified and inverted through the tube **1163** and impressed upon the upper shield grid of the busy test thyratron tube **1162** through the coupling condenser **1189**. Normal operating bias for the upper shield grid of the tube **1162** is impressed upon this grid through the crystal rectifier **1168** from a bleeder circuit consisting of the two resistors **1166** and **1167**. More specifically, these resistors are connected in series between the negative terminal of the bias potential source and the conductor **242** which extends to the cathode terminal of the timing tube **1022** in the units sequence timing circuit **216**. Prior to firing of the tube **1022** at the end of the second digit, the potential impressed upon the upper shield grid of the tube **1162** from the bleeder circuit **1166, 1167** through the rectifier **1168** is highly negative. However, when the tube **1022** is fired to produce current flow through the resistor **1052** and **1053**, this bias potential is reduced to zero. It will be understood, therefore, that after the timing tube **1022** is fired, the busy pulses impressed upon the upper shield grid of the tube **1162** serve to drive this grid negative with respect to ground.

Connector pulses impressed on the output conductor **239** by the connector pulse forming circuit **217** are applied to the inner control grid of the tube **1162** in a positive sense over a path which includes the coupling condenser **1172**. Normally, this grid is biased to a predetermined negative potential from a bleeder circuit comprising the series connected resistor **1170** and **1173**, the conductor **248** and the resistor **2011** which is bridged between the negative terminal of the bias potential source and the positive terminal of the anode current source. This negative potential serves to prevent the busy test tube **1162** from firing when the potential on the upper shield grid of the tube is reduced to zero through ionization of the timing tube **1022**.

Each positive connector pulse impressed upon the control grid of the tube **1162** has the effect of driving this grid positive relative to the tube cathode so that in the event no busy pulse is coincidentally present on the upper shield grid of the tube to drive the latter grid negative, the tube fires. Thus the idle condition of the called line is indicated. However, if busy pulses are delivered to the upper shield grid of the tube **1162** to drive this grid negative coincidentally with excitation of the tube control grid with the positive connector pulses, the tube **1162** is not fired. Thus the busy condition of the selected called line is indicated. In the event the busy test tube **1162** fires, current conduction through the tube is thereafter independent of the potentials impressed upon the two grids thereof. Thus the tube will continue to conduct for the duration of the call and until the connector **12b** is released. Space current flow through the tube causes a large voltage drop to appear across the cathode load resistor **1169**. This voltage is impressed upon the cut-through conductor **251** through the resistor **1190**. It will thus be understood that if the called line **32** is idle, the busy test tube **1162** responds to the connector pulses impressed upon the control grid thereof from the connector pulse forming circuit **217** by firing to develop a positive control potential on the cut-through conductor **251**. On the other hand, if this called line is busy, the application of inverted busy pulses to the upper shield grid of the tube **1162** in time coincidence with the connector pulses applied to the control grid of this tube prevent the tube from firing.

Referring now more particularly to the busy lock circuit **219** in its operation to lock the connector in its called line busy setting in the event the busy test tube **1162** is not fired in the manner explained above, it is pointed out that the control grid of the busy lock tube **2007** is normally biased to a potential slightly positive with respect to ground over the conductor **246** from a bleeder circuit consisting of the resistors **2016, 247, 1055, 1052** and **1053**, and the conductors **242** and **246**. With the tube **2007** normally deionized, the cathode thereof is at ground potential and the small positive bias voltage impressed upon the control grid of the tube is insufficient to cause the tube to fire. However, when the timing tube **1022** is fired in the manner explained above to produce a large positive potential on the conductor **242**, the positive potential present on the conductor **246** starts to increase and charge the condenser **2010** in the proper direction to increase the positive potential on the control grid of the tube **2007**. The charging rate of this condenser is of course determined by the time constant of the circuit in which the condenser is included. Preferably, the time constant of this circuit is made relatively short, such that if the busy lock tube **2007** is not otherwise biased against firing in the manner explained below, the control grid potential of the tube is rapidly increased in a positive sense to the tube ignition value within a few pulse frames after the timing tube **1022** is rendered conductive.

Assuming that the called line is busy such that the busy test tube **1162** is prevented from firing in the manner explained above, the rise in potential across the condenser **2010** results in ionization of the busy lock tube **2007** to produce current flow through the anode resistor **2011** and the cathode resistor **2057**. Thus the positive potential at the anode of the tube **2007** is substantially decreased whereas the positive cathode potential of this tube is greatly increased. Since the resistor **2011** is included in the above-described bleeder circuit from which the negative bias potential for the control grid of the busy test tube **1162** is derived, it will be understood that when the busy lock tube **2007** is rendered conductive to produce a large voltage drop across the resistor **2011**, the negative bias potential impressed upon the control grid of the busy test tube **1162** is increased to a very high value with the result that this tube is positively biased against inadvertent firing as a result of the continued application of pulses to the two grids thereof.

Normally the control grid of the inverter tube **2006** is biased positively to the anode current saturation value of the tube from a bleeder circuit which comprises the anode resistor **2011** of the busy lock tube **2007** and the two resistors **2013** and **2014**, the three identified resistors

being connected in series between the +B switching conductor 12c and the negative terminal of the bias potential source. Thus the inverter tube **2006** is normally heavily conductive. The control grid of the busy tone gate tube **2005** is normally biased negatively well beyond cutoff by the potential supplied thereto from a bleeder circuit consisting of the anode resistor **2051** of the tube **2006**, the resistor **2052**, the conductor **250** and the resistor **2053**, which circuit is bridged between the positive terminal of the anode current source and the negative terminal of the bias potential source. With the busy tone gate tube **2005** biased beyond cutoff, the busy tone signal voltage produced on the conductor **46** by the busy tone signal generator 29*b* and impressed upon the control grid of the tube **2005** through the coupling condenser **2054** is prevented from reaching the calling line out gate circuit **226**.

When the busy lock tube **2007** is fired in the manner explained above, the resulting voltage drop produced across the resistor **2011** drives the control grid of the inverter tube **2006** negative well beyond cutoff. As a consequence, the voltage drop across the resistor **2051** disappears to drive the control grid of the busy tone gate tube **2005** positive into the Class A operating region of the tube and thus render the tube conductive. The busy tone signal impressed upon the control grid of the tube **2005** through the coupling condenser **2054** is now reproduced at the anode of this tube and impressed upon the calling line out gate circuit **226** over a path which includes the coupling condenser **2055**, the isolating resistor **2056** and the conductor **244**. From the calling line out gate circuit the busy tone signal is forwarded through the distributor **15** and the line circuit **10** to the calling line for reproduction by the receiver at the calling substation in the manner explained below. Reproduction of this signal serves to inform the calling subscriber that the called line is busy and that the connection should be released.

As explained above, if the called line tests idle, the busy test tube **1162** is rendered conductive to produce a relatively large voltage drop across the cathode resistor **1169**. This voltage causes current flow over a path comprising the resistor **1190**, the conductor **251**, the crystal rectifier **2012** and the cathode resistor **2057** of the busy lock tube **2007** in the proper direction to drive the cathode of the latter tube highly positive. As a consequence, the subsequent rise in positive potential of the control grid of the tube **2007** resulting from charging of the condenser **2010** to the potential level of the conductor **242** is prevented from firing the tube **2007**. It will be understood, therefore, that the busy lock tube **2007** is only rendered conductive to perform the functions just described in the event the called line or more particularly the time position assigned thereto in each pulse frame is tested by the busy test tube **1162** and found busy. It will also be understood that the rectifier **2012** is so poled as to prevent the voltage developed across the cathode resistor **2057** when the tube **2007** fires from being applied to the conductor cut through conductor **251** to cause false cut through operation of the connector.

In considering the details of the busy gate circuit **220**, it will be recalled that this circuit is provided to gate the connector pulses developed by the connector pulse forming circuit **217** to the busy conductor **52** upon completion of the busy test in the event the time position assigned to the called line indicates that the called line is idle. Gating of the connector pulses through the tube **1164** to the busy conductor **52** provides an indication to all of the other finders and connectors of the system that the called line is busy. As a result, when and if the call is answered at the called substation the called line is marked as busy in all of the finders to prevent an idle finder from associating itself with the called line. Further, any other connector of the system, as for example, the connector 13*b*, which may later be directed to route a call to the called line selected by the connector 12*b* responds to the connector pulses gated by the tube **1164** to the busy conductor **52** by indicating that the called line is busy.

Normally the anode, cathode and control grid of the gating tube **1164** have no potentials thereon, the control grid and anode of this tube being connected by way of the cut through conductor **251** and the resistor **1190** to the cathode terminal of the load resistor **1169** associated with the busy test tube **1162**. When connector pulses are first released to the conductor **239** by the connector pulse forming circuit **217** in the time position assigned to the called line, these positive pulses cause grid to cathode current conduction through the gating tube **1164**, the coupling condenser **1171** and the cathode load resistor **1175**. The first few pulses traversing this circuit serve to charge the condenser **1171** substantially to the connector pulse amplitude and this charge is maintained on the condenser **1171** during each off pulse period. The voltage thus built up across the condenser **1171** is negatively applied to the control grid of the tube **1164** to arrest grid to cathode current conduction through the tube during the connector pulse periods. Thus the charge accumulated across the condenser **1171** during the first few connector pulses released by the circuit **217** prevents any pulses from being applied to the busy conductor **52** by way of the busy gate circuit **220**. Moreover, the pulses initially released to the conductor **52** and resulting from grid current conduction through the cathode resistor **1175** are of such a low order of magnitude as to have no effect on the busy test facilities of the other links of the system. It will thus be understood that unless and until anode potential is supplied to the tube **1164** from the cathode load resistor **1169** of the busy test tube **1162**, connector pulses occurring in the time position assigned to the called line are not gated by the busy gate circuit **220** to the busy conductor **52**. This means that if the called line is tested and found busy, connector pulses are not released to the busy conductor **52** from the connector 12*b*.

In the event the called line tests idle, such that the busy test tube **1162** is fired in the manner explained above, anode potential is supplied to the anode of the busy gate tube **1164** from the cathode terminal of the cathode load resistor **1169**, thereby to produce space current flow through this tube. Immediately the tube **1164** is thus rendered conductive to produce a voltage drop across the cathode load resistor **1175** of the tube, the bias between the input electrodes of the tube is increased in a negative sense so that the connector pulses appearing on the conductor **239** and impressed upon the control grid of the tube **1164** through the condenser **1171** have the effect of driving this control grid positive relative to the tube cathode during each connector pulse period. As a consequence, the connector pulses are amplified through the tube **1164** and appear as positive pulses at the cathode terminal of the load resistor **1175**. These pulses are impressed upon the busy conductor **52** over a path which includes the coupling condenser **1174** and the conductor **249**. They serve to mark the called line as busy in the manner explained above.

The connector pulses developed across the cathode load resistor **1175** of the tube **1164** are also impressed upon the control grid of the inverter tube **1163** through the coupling condenser **1188**. They are amplified and inverted through the tube **1163** and impressed upon the upper shield grid of the busy test tube **1162** through the coupling condenser **1189**. However, by the time these pulses are negatively applied to the upper shield grid of the tube **1162**, this tube has already been rendered conductive so that the potentials applied to the two grids thereof are ineffective to control space current flow through the tube. Thus the busy test circuit **218** is prevented from recognizing the busy pulses released thereto locally in the connector 12*b* by the busy gate circuit **220**.

Referring now more particularly to the called line out

gate circuit **224**, it will be recalled that this circuit is provided to resample the signal voltage stored in the calling line reconstructor circuit **208** in the time position assigned to the selected called line and to release signal pulses, modulated in accordance with the sampled signal voltage, to the distributor in this time position for distribution to the line circuit terminating the called line. This circuit is also controlled by the busy test circuit **218** and the ring trip circuit **221** to transmit a start ring signal to the line circuit terminating the called line after this line is tested and found idle and to terminate this signal when the call is answered at the called substation. To perform these functions, narrow commutator drive pulses positively applied to the commutator drive conductor **35** by the commutative drive circuit **25** in the manner illustrated in Figs. 37 to 40, inclusive, are impressed upon the suppressior grid of the gate tube **1912** through the coupling condenser **1940**, and positive connector pulses developed on the conductor **239** at the output side of the connector pulse forming circuit **217** in the time position assigned to the selected called line are impressed upon the control grid of the gate tube **1912** through the coupling condenser **1941**. The commutator drive pulses impressed upon the suppressor grid of the tube **1912** are positively clamped to ground in an obvious manner through the action of the crystal rectifier **1923**. Normally, the control grid of this tube is biased beyond cutoff by the negative potential impressed thereon from the potentiometer **1924** through the resistor **1942**. However, the positive connector pulses impressed upon the control grid of the gate tube **1912** through the coupling condenser **1941** serve to drive the control grid of this tube into the conductive region of the tube, thereby to gate to the output side of the tube the particular commutator drive pulses which are straddled by the connector pulses. More specifically, each connector pulse serves to drive the control grid of the tube **1912** positive from a value below cutoff until the potential on this grid reaches the ground potential level. This permits the commutator drive pulse impressed upon the suppressor grid of the tube and straddled by the connector pulse to produce a very narrow pulse of low amplitude at the anode of the tube **1912**. These gated pulses appear at the anode of the tube **1912** as pulses of negative polarity. In order to prevent variations in the amplitude of the connector pulses from influencing the amplitude of the narrow pulses gated by the tube **1912**, the connector pulses are positively clamped at the ground potential level through the action of the diode comprised of the anode **940***a* and cathode of the tube **940** combined with the diodes effectively formed by the control grid and cathode elements of the tubes **1911**, **1912** and **1809***b*. Specifically, these parallel connected diode paths positively prevent the control grids of any one of the three tubes **1809***b*, **1911** and **1912** from being driven positive relative to the respective tube cathodes. The clamping action is obtained in the manner explained above with reference to operation of the diode comprising the anode **940***b* and cathode of the tube **940** to clamp the tops of the finder gate pulses appearing on the conductor **12***d* at the ground potential level.

The narrow pulses gated by the tube **1912** are impressed upon the control grid of the amplifier and inverter tube **1913** through the coupling condenser **1943** and are amplified and inverted through this tube to appear as positive pulses at the tube anode. These positive pulses are impressed upon the control grid of the gate tube **1914** through the coupling condenser **1944**. Normally, the control grid of the tube **1914** is biased well beyond cutoff to prevent the sampling pulses delivered thereto from the tube **1913** from driving this grid into the conductive region of the tube. The negative potential for thus biasing the control grid of the tube **1914** beyond cutoff is impressed upon this control grid through the back resistance of the crystal rectifier **1920** from a bleeder circuit consisting of the two resistors **1945** and **1946** which are connected in series across the negative bias potential source.

When the busy test tube **1162** is fired in the manner explained above to indicate that the called line is idle, the positive potential developed at the cathode terminal of the load resistor **1169** is impressed across the resistor **1946** and the shunting crystal rectifier **1921** in parallel over a path which includes the resistor **1190**, the cut through conductor **251** and the resistor **1922**. This potential serves to reverse the polarity of the voltage across the rectifier **1921** causing this rectifier to conduct heavily and thus provide a path in shunt with the resistor **1946** which has no appreciable resistance. Thus the bias potential on the control grid of the gate tube **1914** is effectively reduced to zero, i.e., to the ground potential level. After the bias on this control grid is thus reduced, each sampling pulse delivered to the control grid thereof through the coupling condenser **1944** is rendered effective to vary anode current flow through the tube **1914** in accordance with the amplitude of the pulse. This pulse amplitude is positively clamped to the ground potential level through the action of the crystal rectifier **1920**. Thus if the amplitude of the pulses impressed on the control grid of the tube **1914** tends to exceed the ground potential level, the condenser **1944** is charged to develop a voltage thereacross which subtracts from the amplitude of succeeding sampling pulses. The described arrangement comprising the bleeder circuit **1945**, **1946** and the crystal rectifier **1921** for controlling the bias on the control grid of the gate tube **1914** and for decreasing the bias level to a pulse gating value when the busy test tube **1162** fires insures that the required bias potential change on the control grid of the tube **1914** will always occur incident to the connector cut through operation and that the control grid potential will be maintained at the ground level so long as the voltage on the conductor **251** exceeds the normal voltage across the resistor **1946**. The arrangement has the additional advantage of allowing for greater resistor tolerances in the biasing network for the control grid of the tube **1914**.

The positive sampling pulses impressed upon the control grid of the tube **1914** following the described reduction in the bias potential of this grid to zero have the effect of causing cathode current to flow in the tube, but are ineffective to produce anode current flow through the tube until such time as the suppressor grid of the tube is biased to a suitable potential level. From an examination of the circuit, it will be seen that the biasing circuit for the suppressor grid of the tube **1914** comprises the resistor **2020**, the potentiometer **2021**, the resistor **2024**, the conductor **253**, the resistor **1181**, the conductor **251** and the resistor **1190** and **1169**. This circuit is bridged across the negative bias potential source. That portion of this circuit which comprises the resistor **2024**, the conductor **253**, the resistor **1181**, the conductor **251**, the resistor **1190** and the cathode load resistor **1169** of the busy test tube **1162** is paralleled by a crystal rectifier **2023** which is so poled as to be conductive so long as a voltage is not introduced into the circuit through ionization of the busy test tube **1162**. The potentiometer **2021** included in the described biasing circuit has a wiper adjustable therealong to determine the normal suppressor grid bias of the tube **1914**. This wiper is connected to the suppressor grid of the tube **1914** through a portion of the volume control potentiometer **2019** and the wiper adjustable along the potentiometer. With the rectifier **2023** conducting, the bias voltage derived from the potentiometer **2021** has a magnitude sufficient to bias the suppressor grid of the tube **1914** slightly negative relative to the tube cathode, thereby to provide for reproduction of the sampling pulses impressed upon the control grid of this tube at the tube anode at the normal pulse amplitude. When, however, the busy test tube **1162** is fired to indicate that the called line is idle, a voltage of approxi-

mately 130 volts is developed across the resistor **1169** which overcomes the voltage supplied by the negative bias potential source and drives the suppressor grid of the tube **1914** somewhat positive relative to the tube cathode. This change in the suppressor grid bias potential of the tube **1914** occurs coincident with the above-described change in the control grid potential of the tube from a negative value beyond cutoff to the ground potential level. The voltage introduced into the described suppressor grid biasing circuit as a result of current flow through the tube **1162** drives the cathode terminal of the rectifier **2023** positive relative to the rectifier anode terminal, thereby to render this rectifier non-conductive. With the control grid potential of the tube **1914** at its normal pulse gating value and the suppressor grid of the tube at a slightly positive value relative to the tube cathode, this tube conducts heavily during each sampling pulse interval so that large amplitude sampling pulses of negative polarity are delivered over the distributor input conductor **51** to the distributor **15**. In this regard, it is noted that operating anode potentials for the gate tube **1914** and the gate tube **1919** in the calling line out gate circuit **226** are supplied to these tubes over paths which commonly include the resistor **2142** and the distributor input conductor **51**. The large amplitude sampling pulses thus delivered to the distributor **15** in the time position assigned to the called line effect operation of the ringing facilities included in the line circuit **16** terminating the called line in the exact manner previously explained with reference to operation of the line circuit **10**. Thus the operation of ringing the called substation is initiated.

As explained more fully below, when the call is answered at the called substation, the ring trip circuit **221** operates to provide a low resistance shunt between the conductor **253** and ground, thereby to reduce to approximately ten volts the positive voltage which is introduced into the biasing network for the suppressor grid of the tube **1914** in opposition to the voltage of the negative bias potential source. This decrease in the positive potential on the conductor **253** has the effect of reversing the polarity of the voltage across the crystal rectifier **2023** with the result that this rectifier is rendered heavily conductive. Since the internal resistance of this rectifier in the forward direction is substantially zero, the bias on the suppressor grid of the tube **1914** is changed from a positive value to a slightly negative value which provides for operation of the tube **1914** within the class A operating range of the tube. More specifically, the negative voltage impressed upon the suppressor grid of the tube **1914** is that voltage which appears across the conducting rectifier **2023** of substantially zero internal resistance and that portion of the potentiometer **2021** which is connected between the lower terminal of the rectifier **2023** and the wiper adjustable along the potentiometer **2021**. It will be understood that this wiper may be so adjusted along the potentiometer **2021** that when the ring trip circuit **221** operates to cause current conduction through the rectifier **2023** the negative potential impressed upon the suppressor grid of the tube **1914** through the potentiometer **2019** serves to bias this tube to the exact center of its class A operating range.

Signal voltages derived from the calling line **10** and reconstructed across the cathode load resistor **1825***a* of the calling line reconstructor circuit **208** in the manner previously explained are impressed upon the suppressor grid of the tube **1914** over a path which includes the conductor **256**, the coupling condenser **2029** and the volume control potentiometer **2019**. More specifically, the volume control potentiometer **2019** is bridged across the cathode load resistor **1825***a* of the reconstructor circuit **208** in series with the coupling condenser **2029** and the by-pass condenser **2022**. That portion of this voltage which appears across the left portion of the potentiometer **2019** is impressed upon the suppressor grid of the tube **1914** and serves to amplitude modulate the sampling pulses developed at the anode of this tube. Thus, sampling pulses occurring in the time position assigned to the called line and modulated in accordance with the signal voltage reconstructed and stored (for one pulse frame) by the calling line reconstructor circuit **208** are transmitted over the distributor input conductor **51** for distribution to the line circuit terminating the called line. After the rectifier **2023** is rendered conductive in response to operation of the ring trip circuit **221**, variations in the current traversing this rectifier have negligible effect on the magnitude of the bias voltage impressed upon the suppressor grid of the tube **1914**, due to the very low forward resistance of this rectifier. As a consequence, the circuit stability is very high and greater tolerances are permitted for the resistors included in the biasing network for the suppressor grid of the tube **1914**.

Referring now more particularly to the operation of the ring back tone gate tube **2004** to gate the ring back tone signal voltage to the calling line outgate circuit **226**, it is pointed out that the control grid of this tube is continuously excited by the ring back tone signal voltage developed by the generator **29***c* over a path which includes the conductor **48** and the coupling condenser **2059**. Normally, however, the tube **2004** is biased beyond cutoff by the bias potential impressed upon the control grid thereof through the isolating resistor **2061** from a biasing circuit consisting of the resistors **2060** and **2062**, the conductor **253**, the resistor **1181**, the conductor **251** and the resistors **1190** and **1169**. This circuit is bridged across the terminals of the negative potential source. When the busy test tube **1162** is fired to initiate the called substation ringing operation in the manner just explained, the voltage developed across the resistor **1169** and injected into the above-described biasing circuit drives the grid of the gate tube **2004** into the class A operating region of the tube. Thus, the tube **2004** is rendered operative to reproduce the ring back tone signal voltage at the anode thereof. This voltage is impressed upon the suppressor grid of the gate tube **1919** in the calling line outgate circuit **226** over a path which includes the condenser **2063**, the mixing resistor **2064** and the conductor **244**. From the circuit **226** the ring back tone signal voltage is transmitted through the distributor **15** and the line circuit **10** to the line **23** for reproduction by the receiver **1102** provided at the calling substation. Audible reproduction of this signal serves to advise the calling subscriber that the called substation is being rung.

When the call is answered at the called substation to effect operation of the ring trip circuit in the manner explained below, the tube **1165** is fired to reduce to approximately 10 volts the positive voltage on the conductor **253**. As a result, the control grid of this tube is driven negative to cut off space current flow through the tube and thus terminate transmission of the ring back tone signal to the calling substation.

In considering the operation of the called line in gate circuit **223**, it will be recalled that this circuit is provided for the purpose of gating sampling pulses carrying signals derived from the called line to the called line reconstructor circuit **222**. To this end the inner control grid of the gate tube **1911** provided in the circuit **223** is excited by connector pulses impressed thereon through the coupling condenser **1941** from the connector pulse forming circuit **217**, and the suppressor grid of this tube is excited by signal bearing multiplexer pulses impressed thereon from the multiplexer output conductor **50** through the coupling condenser **1947**. The circuit configuration and operation of the called line in gate circuit **223** are identical with those of the calling line in gate circuit **207** described above. From this description it will be understood that signal bearing multiplexer pulses occurring only in the time position assigned to the called line are gated by the tube **1911**, inverted and amplified by the inverter tube **1910**, and impressed upon the called line reconstructor circuit **222** over a path which includes the coupling con-

denser **1948** and the conductor **254**. All other signal modulated multiplexer pulses present on the multiplexer output conductor **50** are excluded from the called line reconstructor circuit **222** due to lack of coincidence between these pulses and the connector pulses impressed upon the control grid of the gate tube **1911**.

Referring now more particularly to the called line reconstructor circuit **222**, it is again pointed out that the purpose of this circuit is to reconstruct the signals derived from the called line and transmitted thereto on the multiplexer pulses gated by the called line in gate circuit **223**, and of storing the signal voltage amplitude of each such gated pulse for the time interval of one pulse frame. In configuration and operation, this reconstructor circuit is identical with the calling line reconstructor circuit **208** and its operation will be readily understood from the above description of the latter circuit. It is pointed out, however, that connector pulses derived from the connector pulse forming circuit **217** in the time position assigned to the called line and impressed upon the control grid of the peaker tube **1809*b*** through the coupling condenser **1941** are utilized to control the operation of the condenser discharging tube **1807*b***. More specifically, the peaker tube **1809*b*** differentiates the leading edge of each connector pulse impressed upon the control grid thereof to produce a sharp pulse which drives the discharging tube **1807*b*** into its conductive region to discharge the condenser **1811*b*** just prior to the application of a succeeding signal bearing multiplexer pulse on the control grid of the charging tube **1808*b*** from the called line in gate circuit **223**. As explained above with reference to the reconstructor circuit **208**, the charge on the condenser **1811*b*** is varied up and down in accordance with the amplitude of the signal modulated on the multiplexer pulses gated by the circuit **223**, and this voltage is utilized to control the cathode follower tube **1806*b*** so that the signal is reconstructed across the cathode resistor **1825*b*** of the tube. The voltage thus developed across the resistor **1825*b*** is impressed upon the ring trip circuit **221** over a path which includes the resistor **1820**, the resistor **1925**, and the conductor **252**. This voltage is also impressed upon the calling line out gate circuit over a path which includes the conductor **257** and the coupling condenser **2058**.

Before the call is answered at the called substation, no multiplexer pulses occurring in the time position assigned to the called line are present on the multiplexer output conductor **50**. Accordingly, no pulses are gated by the called line in gate circuit **223** to the called line reconstructor circuit **222**. Under these circumstances the charging tube **1808*b*** is not excited during successive connector pulses. However, the discharging tube is rendered conductive coincident with the leading edge of each connector pulse. As a consequence, the condenser **1811*b*** is discharged down to a very low level with the result that current flow through the cathode follower tube **1806*b*** is held at a low level. Thus, the voltage drop across the cathode load resistor **1825*b*** is relatively low. When the call is answered at the called substation, however, multiplexer pulses are gated to the circuit **222** through the called line in gate **223** to effect charging of the condenser **1811*b*** during each such pulse. This has the effect of increasing the current flow through the cathode follower tube **1806*b*** and hence of increasing the magnitude of the voltage drop across the resistor **1825*b***. When a signal voltage is modulated on the gated pulses, this voltage, i.e. that across the resistor **1825*b***, is obviously varied in amplitude in accordance with the signal voltage.

Referring now more particularly to the ring trip circuit **221**, it is again pointed out that this circuit is provided for the purpose of lowering the amplitude of the pulses released by the called line out gate circuit **224** over the distributor input conductor **51** to the distributor **15** when the call is answered at the called substation. Operation of the ring trip circuit **221** also has the effect of terminating the transmission of the ring back tone signal to the calling substation. In order that the ring trip operation may be permanently effected for the duration of the call, a tube **1165** of the thyratron type is employed as the ring trip tube. As will be apparent from the following explanation, this tube is fired immediately multiplexer pulses are released by the multiplexer **11** in the time position assigned to the called line, indicating that the line has been answered, and starts in an ionized condition to prevent inadvertent resumption of the ringing operation even if the release of multiplexer pulses in this time position is terminated. This arrangement has the desired effect of preventing ultimate reringing of the called substation in the event the connection involving the connector **12*b*** is released at the called substation before it is released at the calling substation.

Operating anode potential for the ring trip tube **1165** is supplied to this tube from the cathode end of the load resistor **1169** included in the cathode circuit of the busy test tube **1162** over a path which includes the resistor **1190** and the conductor **251**. This means that the ring trip tube **1165** cannot operate unless and until the test tube **1162** is fired in the manner explained above. Normally, the control grid of the ring trip tube **1165** is maintained at a potential appreciably negative relative to the grounded cathode of the tube from a biasing circuit which includes the cathode load resistor **1825*b*** of the tube **1806*b*** included in the called line reconstructor circuit **222**, the resistor **1820**, the resistor **1925**, the conductor **252**, the resistor **1179** and the resistor **1180**, which circuit is bridged between the negative terminal of the bias potential source and ground. In conjunction with the resistors **1820** and **1925** included in this biasing circuit, the condensers **1821** and **1926** form a low pass filter network which has the effect of preventing spurious pulses released by the multiplexer **11** in the time position assigned to the called line from prematurely tripping the ringing operation. This filter also functions to keep hash developed in the ring trip tube **1165** from backing up to modulate the connector signal pulses released by the calling line out gate circuit **226** to the distributor **15** in the manner explained below.

As pointed out above, until such time as the call is answered at the called substation, multiplexer pulses are not released by the multiplexer **11** over the conductor **51** to the called line in gate circuit **223** in the time position assigned to the called line. When this condition prevails, the discharge tube **1807*b*** in the reconstructor circuit **222** keeps the condenser **1811*b*** discharged to a very low level with the result that no appreciable voltage is developed across the cathode load resistor **1825*b***. As a consequence, the control grid of the ring trip tube **1165** is biased below cutoff to prevent this tube from firing. However, when the call is answered at the called substation the multiplexer **11** releases pulses to the connector **12*b*** in the time position assigned to the called line with the result that an appreciable voltage is developed across the resistor **1825*b*** which opposes the negative voltage impressed upon the control grid **1165** from the above traced biasing circuit. Thus the control grid of the ring trip tube **1165** is driven positive relative to the tube cathode, thereby to fire the tube and reduce the potential at the anode thereof to a very low positive value of approximately ten volts. As a consequence, the polarity of the voltage across the rectifier **2023** is reversed in the manner previously explained to produce heavy current flow through this rectifier and thus bias the gate tube **1914** to the middle of its class A operating range. Incident to the increase in bias on the suppressor grid of the gate tube **1914**, the amplitude of the connector pulses released by this tube over the distributor input conductor **51** to the distributor **15** is greatly reduced, thereby to effect termination of the ringing op-

eration in the line circuit associated with the called line in the manner previously explained. The decrease in the positive potential on the conductor 253 which results from ionization of the ring trip tube 1165 also has the previously described effect of increasing the bias on the control grid of the ring back tone gate tube 2004 to bias this tube beyond cutoff. Accordingly, the tube 2004 is rendered inoperative to repeat the ring back tone signal to the calling line out gate circuit 226 over the conductor 224. Thus, firing of the ring trip tube 1165 has the effect of terminating the ringing operation and of stopping the transmission of the ring back tone signal to the calling substation. In this regard, it will be understood that since the tube 1165 is of the thyratron type, the control grid thereof loses control once the tube has fired so that current flow through the tube cannot be varied or stopped by varying the potential on the control grid thereof. In other words, the ring trip tube passes current of a substantially constant magnitude for the duration of the call.

Referring now more particularly to the calling line out gate circuit 226, it is again pointed out that this circuit is provided for the purpose of resampling the signal voltage stored in the reconstructor circuit 222 in the time position assigned to the calling line and of releasing pulses modulated with the reconstructed signal voltage to the distributor in this time position. The circuit also performs the additional function of gating pulses to the distributor 15 which are modulated in accordance with the various supervisory tones, i.e., dial tone, busy tone and ring back tone, in the manner pointed out above.

To perform these functions, finder gate pulses appearing on the conductor 12*d* in the time position assigned to the calling line are impressed upon the control grid of the gate tube 1917 through the condenser 1939, and commutator drive pulses appearing on the conductor 35 are impressed upon the suppressor grid of this gate tube through the condenser 1940. The gate tube 1917 functions in the exact manner explained above with reference to operation of the gate tube 1911 to gate only that commutator drive pulse of each pulse frame which occurs in the time position assigned to the calling line. Specifically, the tube 1917 will only gate a commutator drive pulse when this pulse occurs in time coincidence with one of the finder gate pulses impressed upon the control grid of the tube. Each pulse gated by the tube 1917, i.e., reproduced at the anode thereof, is of negative polarity. The finder gate and commutator drive pulses respectively impressed upon the control and suppressor grids of the gate tube 1917 are both clamped to ground in the manner previously explained so that the drive pulses gated by this tube are of uniform amplitude. Each pulse gated by the tube 1917 is amplified and inverted through the inverter tube 1918 and impressed as a positive pulse upon the control grid of the gate tube 1919. Bias for the control grid of the gate tube 1919 is obtained from a network including the crystal rectifier 1931 and the resistors 1928, 1929 and 1930. The resistor 1929 is returned to the +B switching conductor 12*c*, while the resistor 1930 is returned to the negative terminal of the bias potential source. Hence, with the link 12 inactive such that no positive potential is present on the conductor 12*c*, a relatively large voltage is developed across the resistor 1928 which is negatively applied to the control grid of the gate tube 1919 to bias this tube beyond cutoff, the rectifier 1931 being so poled as to be non-conductive when the upper terminal of the resistor 1928 is negative with respect to ground. The gate tube 1919 is thus biased beyond cutoff when the link 12 is not in use. However, when the link is taken into use and the finder 12*a* thereof functions to impress a positive voltage of 140 volts on the +B switching conductor in the manner previously explained, current flow through the resistor 1928 is reversed causing the crystal rectifier 1931 to conduct in the forward direction. Due to the low internal resistance of this rectifier the voltage drop thereacross is substantially zero so that the control grid potential of the tube 1919 is effectively reduced to the ground potential level. Thus, the gate tube 1919 is rendered effective to amplify the positive pulses impressed upon the control grid thereof from the inverter tube 1918 in the time position assigned to the calling line. Grid leak bias on the control grid of this tube adjusts the grid potential so that the pulses are positively clamped to the ground potential level.

Normally, the suppressor grid of the gate tube 1919 is biased to a value which will insure operation of the gate tube 1919 in the middle of its class A operating range when the control grid of the tube is biased to the ground potential level. Specifically, the suppressor grid of the tube 1919 derives its bias from a biasing network which comprises the resistor 2060 and the potentiometers 2028 and 2059, it being noted that the potentiometer 2059 is adjustable to establish the desired operating bias on the suppressor grid of this tube. As will be evident from the preceding explanation, the three tubes 1917, 1918 and 1919 are activated immediately the link 12 is seized and the finder 12*a* thereof starts to deliver finder gate pulses to the connector 12*b* over the conductor 12*d*. Thus the circuit 226 is rendered operative to gate connector signal pulses modulated in accordance with the supervisory tones, i.e., the dial, busy and ring back tones, immediately the connector is conditioned for operation. These tones are selectively impressed upon the suppressor grid of the gate tube 1919 over paths which commonly include the conductor 244. Each such signal serves to modulate the connector signal pulses released by the gate tube 1919 to the distributor 15 over the conductor 51 in the time position assigned to the calling line in accordance with the frequency of the particular signal involved.

Signal voltages derived from the called line and reconstructed across the output resistor 1825*b* of the calling line reconstructor circuit 222 in the manner explained above are also utilized to modulate the connector signal pulses developed by the gating tube 1919 in the time position assigned to the calling line. To this end, the cathode terminal of the resistor 1825*b* is coupled to the upper terminal of the potentiometer 2028 over a path which includes the conductor 257 and the coupling condenser 2058. Thus the signal voltage developed across the resistor 1825*b* is impressed across the potentiometers 2028 and 2059 in series and an adjustable portion thereof determined by the setting of the potentiometer 2028 is impressed upon the suppressor grid of the gate tube 1919 through the resistor 1927. This signal voltage serves to modulate the connector signal pulses developed at the anode of the tube 1919 in accordance with the varying amplitudes thereof so that the connector signal pulses released by this tube to the distributor 15 carry the intelligence derived from the called line. These pulses are of course diverted by the distributor 15 to the line circuit terminating the calling line where they are detected and impressed upon the calling line for reproduction by the receiver provided at the calling substation.

As will be apparent from the foregoing explanation, the connector 12*b*, operating in conjunction with the multiplexer 11 and the distributor 15 affords separate signal tranmission channel for transmitting intelligence between the calling and called substations of a connection in which the connector is involved. Thus the calling line in gate circuit 207, the calling line reconstructor circuit 208 and the called line out gate circuit 224 are utilized in transmitting signals originating at the calling substation to the called substation. Conversely, the called line in gate circuit 223, the called line reconstructor circuit 222 and the calling line out gate circuit 226 are used to tranmit signals originating at the called

substation to the calling substation. Release of the connector 12*b* is solely under the control of the calling subscriber. Thus if the called subscriber disconnects, the only response is the operation of the multiplexer **11** to discontinue the release of multiplexer pulses to the connector 12*b* in the time position assigned to the called line. The only response of the connector to the absence of multiplexer pulses in this time position is a reduction in the voltage across the output resistor **1825***b* of the called line reconstructor circuit **222**. This voltage decrease has no effect upon the other components of the connector. When the calling party disconnects, however, the finder 12*a* is released in the manner previously explained and incident to the release of this finder, operating anode potential is removed from the +B switching conductor 12*c*. As a consequence, all ionized gas tubes in the connector are deionized. Deionizing of these tubes has the effect of restoring the connector to its normal setting in readiness to handle another call. As previously explained, release of the connector involves deionization of one or more gas tubes in each of the connector components **211, 215, 212, 216, 218, 219** and **221**. In connection with the release of the connector it is pointed out that if a second calling line is waiting for the link **12** at the time the connector 12*b* is released, such that the link is immediately reassigned for use, a condition may arise which will result in the connector assuming an abnormal setting. Thus, as the connector starts to release, the timing tube **942** is deionized to drop the bias on the crystal rectifier **905**. Concurrently, the integrator tube **2008** in the integrator circuit **209** starts to conduct due to the drop in voltage across the load resistor 1825b in the calling line reconstructor circuit **208**. As a consequence, a negative dip is produced in the voltage on the conductor **227**. This voltage dip is differentiated and impressed on the tube **902** through the rectifier **905**, and repeated through the tube **903** to the common cathode conductor **230** of the tens digit register tubes. It has been found that this dip may remain on the conductor **230** after the +B switching conductor 12*c* is reenergized in response to reseizure of the link to handle the call on the waiting line. This dip may have the effect of causing the priming tube **904** to extinguish occasionally and can frequently cause premature ignition of the start tube **941** in the tens sequence timing circuit **212**. Thus, the connector may be caused to assume an abnormal setting. To eliminate this trouble, the condenser **945** should be made quite large so that the bias on the crystal rectifier **905** is maintained during link transfer from one line to a waiting second line, thereby to prevent the indicated voltage dip developed in the integrator circuit **209** from being impressed upon the tube **902** in the tens changeover gate circuit **210**.

Distributor 15

As pointed out in the general description of the system, this circuit, the details of which are illustrated in Figs. 21 and 22 of the drawings, is provided for the general purpose of distributing signal sample modulated connector pulses developed in the connectors of the system to the line circuits terminating the calling and called lines of the system in the time positions of each pulse frame respectively assigned to these lines. More specifically, the circuit is capable of distributing signal modulated connector pulses appearing in different time positions on the common distributor input channel conductor **51** to the respective line circuits under the directive control of the connectors 12*b*, 13*b*, 14*b*, etc. embodied in the system. Generally considered, the distributor **15** comprises one hundred units gate circuits, i.e., one for each line of the system, which individually include ten strings of units gate tubes. Thus the gate circuits individually associated with the lines of the system assigned the directory number designations 11, 12, 13—10 respectitvely comprise ten units gate tubes **2111, 2212, 2213—2210** forming the upper or first horizontal string of units gate tubes. Similarly, the units gate circuits respectively associated with the ten lines of the system having the directory number designations 21, 22, 23—30 individually include the units gate tubes **2121, 2222, 2223—2220** forming the second horizontal string of units gate tubes. In a similar manner, the units gate circuits of the distributor which are individually associated with those lines of the system having the directory number designations 31, 32, 33—30 respectively assigned thereto individually comprise the units gate tubes **2131, 2232, 2233—2230**. Finally, the units gate circuits individually associated with the lines having the directory number designations 01, 02, 03—00 assigned thereto individually include the units gate tubes **2101, 2202, 2203—2200**. Each of the ten strings of units gate tubes is preceded by a tens gate tube and a pulse inverter tube. The four tens gate tubes **2110, 2120, 2130** and **2100** having inverter tubes **2102, 2103, 2104** and **2105** individually connected in tandem therewith are interconnected on an individual basis with the four illustrated strings of units gate tubes. Signal sample modulated pulses impressed on the distributor input channel conductor **51** in the various connectors of the system are delivered to the ten tens gate tubes in parallel through a master inverter tube **2140**. Each of the tens and units gate tubes embodied in the distributor **15** is preferably a pentode of the 6AS6 type. Pentodes of the 6AK6 type are preferably used as the inverter tubes **2140, 2102, 2103, 2104** and **2105**. The various circuit elements employed in interconnecting the identified tubes of the distributor **15** are described below with reference to the functions which they respectively perform in the circuit.

Operation of the distributor **15** is under the joint control of the units pulse ring circuit **20** and the tens pulse ring circuit **21**. More specifically, positive units pulses 62*a*, 62*b*, etc., as shown in the pulse chart of Figs. 37 to 40, inclusive, are delivered to the control grids of the No. 1 units gate tubes of each of the ten horizontal strings in parallel over a path which includes the positive units pulse conductor **31***a*. From this conductor, the identified positive units pulses are impressed upon the control grids of the illustrated No. 1 units gate tubes through the coupling condensers **2111***a*, **2121***a*, **2131***a*, and **2101***a*, respectively. Similarly, the positive units pulses 63*a*, 63*b*, 63*c*, etc., of each pulse frame are impressed upon the inner control grids of the No 2 tubes of each units gate tube string over a path which includes the second positive units pulse conductor **31***b* and positive units pulses 64*a* 64*b*, 64*c*, etc., of each pulse frame are impressed upon the inner control grids of the No. 3 tubes of the ten units gate tube strings in parallel over a path which includes the third negative units pulse conductor **31***c*. The fourth to tenth units gate tubes of the ten units gate tube strings are similarly excited in parallel on a numerical basis over the seven other positive units pulse conductors **31***d*—**31***j*, respectively.

The suppressor grids of the units gate tubes in each of the ten strings are adapted to be excited in parallel by signal sample bearing connector pulses repeated thereto by the respective associated inverter and tens gate tubes. Thus, the suppressor grids of the tubes **2111, 2212, 2213—2210** in the upper units gate tube string are commonly coupled to the anode of the inverter tube **2102** through coupling condensers **2111***c*, **2112***c*, **2213***c*—**2210***c*, respectively. In a similar manner signal sample modulated connector pulses developed at the anode of the inverter tube **2103** are impressed upon the suppressor grids of the tubes **2121, 2222, 2223—2220** in the second units gate tube string, and the suppressor grids of the tubes **2131, 2232, 2233—2230** are commonly coupled to the anode of the third inverter tube **2104**. Finally, the suppressor grids of the tubes **2101, 2202, 2203—2200** forming the tenth units gate tube string are arranged for paral-

lel excitation by signal bearing connector pulses appearing at the anode of the inverter tube **2105**. Signal sample modulated pulses developed in amplified form at the anodes of the respective units gate tubes are gated to the respective line circuits individually associated with these tubes. Thus, the signal bearing pulses gated by the tube **2232** are impressed upon the input circuit of the amplifier tube **2304** in the line circuit **16** over a path which includes the coupling condenser **2232***e*, the crystal rectifier **2232***f* and the conductor **2307**. Similarly, the signal bearing pulses gated by the units gate tube **2223** are impressed upon the input circuit of the amplifier tube **1204** included in the line circuit **10** terminating the line **23** over a path which includes the coupling condenser **2223***e*, crystal rectifier **2223***f*, and the conductor *44a*. The other **98** units gate tubes of the distributor **15** are similarly coupled to the **98** other line circuits with which they are individually associated. From an inspection of the circuits embodied in the distributor **15**, it will be noted that normally the inner control grids of the units gate tubes are at ground potential, i.e., the same potential as the tube cathodes. Thus the control grid of the tube **2223** is connected to ground and the cathode of this tube through a grid resistor **2223***b*. Similarly, the control grid of the units gate tube **2232** is connected to ground and the cathode of this tube through the grid resistor **2232***b*. The suppressor grids of the units gate tubes are normally biased to a predetermined negative potential on an individual basis from biasing potentiometers respectively included in the line circuits with which these tubes are individually associated. Thus the suppressor grid of the tube **2223** is normally biased to a predetermined negative value over a path which includes the conductor *44b* and the back resistance of the crystal rectifier **2223***d* from the potentiometer resistor **1221** included in the line circuit **11**. Similarly, the suppressor grid of the tube **2232** is normally biased to a predetermined negative potential from the potentiometer resistor **2321** included in the line circuit **16** over a path which includes the conductor **2323** and the back resistance of the crystal rectifier **2232***d*.

Signal modulated connector pulses developed on the distributor input connector **51** in the time positions assigned to the calling and called lines of the system are of negative polarity and are impressed upon the inner control grid of the master inverter tube **2140** through the coupling condenser **2143**. These pulses as amplified and inverted in polarity through the tube **2140** and impressed upon the suppressor grids of the tens gate tubes **2110, 2120, 2130—2100** in parallel through the coupling condensers **2110***a*, **2120***a*, **2130***a*—**2100***a*, respectively. Positive tens pulses *72a*, *73a*, *74a*, etc., are successively impressed upon the inner control grids of the tens gate tubes **2110, 2120, 2130—2100** over the positive tens pulse conductors *32a*, *32b*, *32c* and *32j* and through the coupling condensers **2110***e*, **2120***e*, **3130***e*—**2100***e*, respectively, during each pulse frame. Normally the control grids of the tens gate tubes **2110, 2120, 2130—2100** are at ground potential, being connected to the grounded cathodes of these tubes through the illustrated grid resistors. The suppressor grids of the tens gate tubes are normally biased to predetermined negative potentials through the biasing potentiometers individually associated with these tubes. Thus, the suppressor grid of the tube **2110** is normally biased to a predetermined negative potential from the potentiometer **2110***d*, through the back resistance of the crystal rectifier **2110***b*. Rectifiers **2120***b*, **2130***b*, and **2100***b* are similarly provided to interconnect the suppressor grids of the tubes **2120, 2130** and **2100** with the potentiometers **2120***d*, **2130***d* and **2100***d*. With reference to the described biasing circuits for the suppressor grids of the tens and units gating tubes embodied in the distributor **15**, it is noted that individual biasing potentiometers are required since variations in the operating characteristics of the individual tubes require that different suppressor grid bias potentials be supplied to each of these tubes. It is also pointed out that the voltages built up across the coupling condensers **2110***e*, **2120***e*, **2130***e*—**2100***e* as a result of the positive pulses impressed upon the tens pulse conductors *32a*, *32b*, *32c*–*32j* serve to bias the respective tens gating tubes beyond cutoff during off pulse periods. Thus considering the tens gating tube **2130** by way of example, each positive pulse appearing on the tens pulse conductor *32c* charges the coupling condenser **2130***e* through the grid resistor **2130***b* to a relatively high voltage level. After the pulse ends the voltage across this condenser is negatively applied to the control grid of the tube **2130** to bias this tube against cutoff. Moreover, the pulse periodicity and the time constant of the condenser discharge circuit are such that the condenser **2130***e* cannot discharge sufficiently to render the tube **2130** conductive during an off pulse period. It will be understood, therefore, that the tube **2130** is only rendered conductive during each interval when a positive tens pulse is impressed on the conductor *32c* to overcome the bias voltage built up across the condenser **2130***e*. In a similar manner, the voltages built up across the coupling condensers through which positive units pulses are respectively impressed upon the inner control grids of the units gate tubes serve to bias these tubes beyond cutoff during off pulse periods. Thus, the coupling condenser **2232***a* is charged through the grid resistor **2232***b* during each units pulse period in the correct sense to bias the control grid of the tube **2232** negative relative to the tube cathode to a point beyond the cutoff value of the tube during each off pulse interval. As a result, the tube **2232** is only rendered conductive during those intervals when positive units pulses are impressed on the units pulse conductor **31***b*.

From the above explanation it will be understood that each units gate tube is only operative to gate a signal bearing connector pulse during a predetermined units pulse of each pulse frame. Thus considering the tube **2223** by way of example, it will be understood that since the tens gate tube **2120** is only rendered operative to repeat signal bearing connector pulses during the positive tens pulse interval *73a* of each pulse frame, all signal bearing pulses occurring within the frame except those which coincide with the tens pulse period *73a* are blocked from the suppressor grid of the tube **2223**. As many as ten signal bearing connector pulses may be gated through the tube **2120** to the suppressor grid of the units gate tube **2223** during each tens pulse interval *73a*. However, this units gate tube is biased beyond cutoff by the voltage impressed upon the control grid from the condenser **2223***a* except when a positive units pulse is present on the conductor **31***c*. From an examination of Figs. 37 to 40 inclusive, it will be noted that only one positive units pulse, i.e., the pulse occurring in the time position *64b*, is impressed upon the control grid of the tube **2223** during the tens pulse interval *73a* when signal bearing connector pulses are gated to the suppressor grid of this tube by the tens gate tube **2120**. It will thus be apparent that coincidence between the positive tens pulses respectively impressed upon the control grids of the ten tens gate tubes and the units pulses respectively impressed upon the control grids of the units gate tubes is required to effect gating of signal bearing connector pulses through the units gate tubes to the line circuits individually associated therewith.

Referring now more particularly to the mode of operation of the distributor **15** to repeat signal bearing connector pulses from the connector **12***b* to the line circuit **16** in the above-described call originating at the substation A and routed to the substation B, it will be understood that those connector pulses developed in the connector **12***b* which carry signal samples derived from the line **23** and are intended for the line **32** occur on the distributor input conductor **51** in the time position **63***c* assigned to the line **32**. These pulses are negatively applied to the control grid of the master inverter tube

2140 and are amplified and inverted through this tube to appear as positive pulses at the tube anode. In order to prevent cross or spurious modulation of these pulses, the pulse base line or reference voltage is clamped to the ground potential level through the action of the crystal rectifier 2141. Thus if the reference voltage level on the conductor 51 tends to rise above ground potential, the rectifier 2141 conducts to charge the condenser 2143. The voltage thus developed across the condenser 2143 is subtracted from the actual pulse base line value so that the effective pulse base line potential is held at the ground potential level.

As explained above, the positive signal modulated connector pulses appearing at the anode of the master inverter tube 2140 are impressed upon the suppressor grids of the ten tens gate tubes in parallel. Those connector pulses appearing in the time position 63*c* assigned to the called line 32 are gated by the tens gate tube 2130 to the suppressor grids of the ten units gate tubes in the third horizontal string during the third tens pulse period 74*a* of each pulse frame. At this stage, the crystal rectifier 2130*b* coacts with the condenser 2130*a* to clamp the pulse base line potential level to the level of the negative bias derived from the potentiometer resistor 2130*d*. The connector pulses gated by the tube 2130 appear as negative pulses at the anode of this tube and are impressed upon the control grid of the inverter tube 2104 through the coupling condenser 2104*a*. At this state also, the crystal rectifier 2104*b* coacts with the condenser 2104*a* to clamp the pulse base line potential to the ground potential level and thus prevent spurious modulation of the gated pulses. The connector pulses thus impressed upon the control grid of the tube 2104 are amplified and inverted through this tube to appear as positive pulses at the anode thereof. These pulses are impressed upon the suppressor grids of the ten associated units gate tubes in the manner previously explained.

As explained above, the units gate tube 2232 is only rendered operative to gate amplified signal bearing connector pulses impressed upon the suppressor grid thereof through the condenser 2232*c* during that interval of each pulse frame when a positive units pulse is impressed upon the control grid of the tube in coincidence with the positive tens pulse impressed upon the control grid of the tens gate tube 2130. This means that only connector pulses modulated with signal samples derived from the connector 12*b* or more particularly from the calling line 23 and occurring in the time position 63*c* are gated by the tube 2232 to appear at the anode thereof. At the units gate tube 2232, the crystal rectifier 2232*d* coacts with the coupling condenser 2232*c* to clamp the connector pulse base line potential to the negative bias voltage level determined by the setting of the potentiometer 2321, thereby to prevent spurious modulation of the pulses gated by this tube. The signal modulated connector pulses thus developed at the anode of the tube 2232 are of negative polarity and are impressed upon the input circuit of the amplifier tube 2304 included in the line circuit 16 over a path which includes the coupling condenser 2232*e* and the crystal rectifier 2232*f*.

For reasons which will be apparent from the preceding explanation, the signal bearing connector pulses occurring in the time position 63*c* are gated to the circuit 16 at the rate of one pulse for each pulse frame, i.e., at a pulse repetition rate of ten kilocycles. In considering the manner in which the original signals are reconstructed from the samples modulated on the connector pulses gated by the tube 2232, it is pointed out that each pulse charges the condenser 2325 in the line circuit 16 to the amplitude level of the pulse through the low forward resistance of the crystal rectifier 2232*f*. During the succeeding off pulse period, the condenser 2325 discharges through the high back resistance of the rectifier 2232*f* and the resistor 2232*g*. The condenser 2325 also discharges through the resistor 2305 and the potentiometer 2306, and the combined effective resistance of the two parallel condenser discharge paths is preferably of the order of five hundred thousand ohms. In this regard it is noted that the size of the condenser 2235 is of considerable importance in that the condenser should not be so small as to discharge completely during each off pulse period or so large as not to discharge at all during each off pulse period. Thus the condenser 2325 is made so small as to fully discharge during each period separating the arrival of successive connector pulses, the rise or fall of voltage across this condenser has the effect of swinging the grid of the amplifier tube 2304 at the basic carrier frequency of ten kilocycles, such that an excess of carrier energy is delivered to the succeeding components of the line circuit 16. Conversely, if the condenser 2325 has too large a capacitance value, such that it does not discharge to any appreciable extent during an off pulse period, the voltage there-across is built up to a relatively high steady state value with the result that the modulation components of the connector pulses become ineffective to vary the voltage across this condenser in accordance with the amplitude of the signal samples modulated thereon. However, by making the condenser 2325 of the correct size, the voltage across this condenser is varied in accordance with variations in the amplitudes of the connector pulses, thereby to reconstruct the original signals from the signal samples modulated thereon.

The manner in which connector pulses modulated with signals intended for the calling line 23 and impressed upon the distributor input conductor 51 by the connector 12*b* in the time position 64*b* are amplified and inverted through the tube 2140, gated by the tens gate tube 2120, amplified and inverted by the tube 2103 and gated to the line circuit 11 through the units gate tube 2223 will be readily apparent from the preceding explanation with reference to operation of the distributor 15 to deliver samples to the line circuit 16. In an entirely similar manner, the distributor 15 is operative to gate to the other ninety-eight line circuits of the system signal samples occurring in the time positions individually assigned to the lines associated with or terminated by these line circuits. From the above description, it will be apparent that the distributor 15 is arranged to deliver signal modulated connector pulses or signal samples to the one hundred line circuits of the system on a decimal basis. Effectively, this is accomplished by the described method of double multiplexing, employing slow speed distribution of the connector pulses to the units gate circuits followed by high speed distribution of the signal samples to the line circuits through the units gate circuits. As in the multiplexer 11, this arrangement has the important advantage of eliminating the necessity for providing ring circuits in the common equipment having one hundred stages, i.e., stages equal in number to the number of lines in the system. The described method of double multiplexing at the high and low speeds becomes even more important when the system is expanded to accommodate the requirements of exchanges having more than one hundred lines. It also has the important advantage of eliminating the necessity for carrying one hundred or more pulse bus conductors throughout the exchange. Thus, in the illustrated arrangement, the distributor 15 has only a single input channel, namely, that comprising the conductor 51 and the ground return bus conductor of the system.

As in the multiplexer 11, two difficult problems solved in the development of the distributor 15 were those of preventing distortion of the signal modulated connector pulses and of preventing cross talk between the pulses occurring in different time positions which would result in cross talk between the different signal transmission paths through the distributor. Spurious modulation of the connector pulses entering the distributor 15 over

the distributor input conductor **51** is in part prevented by the described clamping circuits provided in association with the input electrodes of the master inverter tube **2140**, the tens gate tubes **2110, 2120, 2130—2100**, the tens inverter tubes **2102, 2103, 2104**, etc. and the units gate tubes. Variations in the amplitude of the tens pulses delivered to the tens gate tubes over the conductors **32***a*, **32***b*, **32***c*—**32***j* and variations in the amplitude of the units pulses delivered to the control grids of the units gate tubes over the conductors **31***a*, **31***b*, **31***c*—**31***j* may also have the effect of distorting the signal samples handled by the distributor **15**. Such variations in the tens units gate pulse amplitudes are minimized by the described resistance-capacitance coupling circuits employed to impress these pulses upon the control grids of the respective tens and units gate tubes.

Another very important feature of the distributor **15** which also contributes to reduction of cross talk between the signal bearing connector pulses is that of employing the inner control grids of the tens and units gating tubes as the pulse gating grids and of using the suppressor grids of these tubes as the signal excited control grids of the tubes. The importance of this feature of the distributor is exactly the same as explained previously with reference to the multiplexer **11**. Cross talk between the signal bearing connector pulses handled by the distributor **15** is also reduced by operating the screen electrodes of the tens and units gating tubes at conservative voltages so that they will not heat up and act as electron emitters to the tube anodes. This is accomplished by providing a voltage dropping resistor, such, for example, as the resistor **2232***h*, between the 150 volt anode current source and the screen electrode of each of the gating tubes. Further to minimize signal frequency variations in the potentials on the screen electrodes of the gating tubes, each such electrode is by-passed to ground at signal frequencies by a suitable by-pass condenser, such, for example, as the condenser **2232***j*. When the described features are incorporated in the distributor **15**, cross talk between the signal bearing connector pulses handled by the distributor and spurious modulation of these pulses within the distributor itself are reduced to tolerable minimums.

SUMMARY

It will be understood that each of the finder-connector links **13, 14**, etc., provided in the system is directively controllable in the same manner as the described link **12** to set up a two-way communication connection between any two lines of the system. Thus the several links of the system are capable of providing mutually non-interfering and secret two-way communication connections between a like number of different pairs of lines at the same time. Although the invention has been disclosed herein with particular reference to operation of the present improved apparatus to set up communication connections between subscribers' lines, it will be readily understood by those skilled in the art that the apparatus may also be employed to interconnect interoffice or interswitch stage trunks or trunk lines with each other or in various combinations of trunks and subscribers' lines. Accordingly, the term "line" or "lines" as used herein and particularly in the claims hereof is hereby defined to include trunks or trunk lines of any and all types as well as subscriber lines. Also by way of definition, it is pointed out that the term "link" as used in the claims hereof is intended to include any switching stage of numerical (directively controllable by dial impulses) or non-numerical (non-directively controlled) type or a combination of one numerical and one non-numerical switching stage. Further, the term "supervisory signal" as used herein and particularly in the claims hereof denotes any signal which performs a control or informative function incident to the setting up of a connection through the improved apparatus disclosed herein and specifically includes on-hook and off-hook signals, dial and busy tone signals, and ringing, ring start, ring cut-off and ring back tone signals. It is also pointed out that where crystal rectifiers are specified in the circuits disclosed herein, rectifiers of the germanium crystal type may well be employed, although any low capacitance type rectifier, including hot cathode electron discharge tubes, may be used.

From the above explanation it will be understood that in the present improved system, all line selecting and signal transmission functions are performed exclusively by electronic facilities without using any electromechanical switching components whatever. As a consequence, line selecting times are many times faster than in conventional automatic telephone systems. Moreover, the dial impulsing speeds to which the present system is capable of responding are much greater than in conventional systems. Also, the present system is characterized by novel facilities for providing each and every one of the supervisory signaling functions normally provided in conventional automatic telephone systems. In this regard particular emphasis is directed to the very simple and yet novel arrangement disclosed herein for guarding busy lines against intrusion and for determining the idle or busy condition of called lines. All of the above and other advantages are realized with the present improved system without any detectable sacrifice in the quality of signal transmission between calling and called substations. Moreover, since no electromechanical switching components, such for example, as relays, stepping switches and the like, are employed in the system, the problems of minimizing, discovering and eliminating relay or switch contact failures are entirely eliminated. From the standpoints of initial equipment cost, equipment size, operating cost, and maintenance cost, the present improved system compares favorably on a per line basis with conventional automatic telephone systems. As far as the possibilities of increasing the trunking capacity of a given exchange are concerned, the present improved system is far superior to known types of automatic telephone systems.

While one embodiment of the present invention has been disclosed, it will be understood that various modifications may be made therein without departing from the true spirit and scope of the invention as defined in the appended claims.

I claim:

1. In an automatic telephone system, a plurality of lines having individually assigned thereto different time positions in repetitive time position frames, a selector provided with two pulse input channels and a pulse output channel and including pulse gating means controlled by pu'ses transmitted over one of said pulse input channels in the time position assigned to a calling one of said lines for gating pulses transmitted to said selector over the other of said pulse input channels in the same time position, the pulses gated to said selector through said pulse gating means from said other pulse input channel being modulated in accordance with signals derived from the calling line, means included in said selector for reconstructing the signals modulated on the pulses gated by said pulse gating means, means included in said selector and controlled by the pu'ses gated by said pulse gating means for gating pulses to said pulse output channel in a different time position, and means included in said selector for modulating the pulses gated to said pulse output channel with said reconstructed signals.

2. In an automatic telephone system, a plurality of lines having individually assigned thereto different time positions in repetitive time position frames, a selector provided with two pu'se input channels and a pulse output channel and including pulse gating means controlled by pulses transmitted over one of said pu'se input channels in the time position assigned to a calling one of said lines for gating pulses transmitted to said selector over the other of said pulse input channels in the same time

position, means included in said selector and controlled by the pulses gated by said pulse gating means for gating pulses to said selector from said other pulse input channel in the time position assigned to a called one of said lines, the pulses gated to said selector by said last-named means being modulated in accordance with signals derived from the called line, means including in said selector for reconstructing said signals, means included in said selector and controlled by the pulses transmitted over said one input channel for gating pulses to said output channel in the time position assigned to the calling line, and means included in said selector for modulating the pulses gated to said pulse output channel with said reconstructed signals.

3. In an automatic telephone system, a plurality of lines having individually assigned thereto different time positions in repetitive time position frames, a selector provided with two pulse input channels and a pulse output channel and including pulse gating means controlled by pulses transmitted over one of said pulse input channels in the time position assigned to a calling one of said lines for gating pulses transmitted to said selector over the other of said pulse input channels in the same time position, the pulses gated to said selector through said pulse gating means from said other pulse input channel being modulated in accordance with signals derived from the calling line, means included in said selector for reconstructing the signals modulated on the pulses gated by said pulse gating means, means included in said selector and controlled by the pulses gated by said pulse gating means for gating pulses to said pulse output channel in a different time position, means included in said selector for modulating the pulses gated to said pulse output channel with said signals, means included in said selector and controlled by the pulses gated by said pulse gating means for gating pulses to said selector from said pulse input channel in the time position assigned to a called one of said lines, the pulses gated to said selector by said last-named means being modulated in accordance with signals derived from the called line, means included in said selector for reconstructing said last-named signals, means included in said selector and controlled by the pulses transmitted over said one input channel for gating pulses to said output channel in the time position assigned to the calling line, and means included in said selector for gating the pulses gated to said pulse output channel by said last-named means with said last-named signals.

4. In an automatic telephone system, a plurality of lines having individually assigned thereto different time positions in repetitive time position frames, a selector provided with two pulse input channels and a pulse output channel and including pulse gating means controlled by pulses transmitted over one of said pulse input channels in the time position assigned to a calling one of said lines for gating pulses transmitted to said selector over the other of said pulse input channels in the same time position, the pulses gated to said selector through said pulse gating means from said other pulse input channel being modulated in accordance with signals derived from the calling line, means included in said selector for reconstructing the signals modulated on the pulses gated by said pulse gating means, means included in said selector and controlled by the pulses transmitted over said one pulse input channel for gating pulses to said pulse output channel in the time position assigned to the calling line, means included in said selector for selectively modulating the pulses gated to said output channel by said last named means with at least one supervisory signal, means included in said selector and at least partially controlled by the pulses gated by said pulse gating means for gating pulses to said output channel in a different time position, and means included in said selector for modulating the pulses gated by said last named means with said reconstructed signals.

5. In an automatic telephone system, a plurality of lines having individually assigned thereto different time positions in repetitive time position frames, a selector provided with a pulse input channel and a pulse output channel and including pulse gating means controlled in accordance with the identity of a calling one of said lines for gating pulses to said selector from said pulse input channel in the time position assigned to the calling line, the pulse flow from said pulse input channel through said pulse gating means to said selector being modulated in accordance with the transmission of switch directing impulses over the calling line, a group of pulse paths, means for sequentially transmitting pulses to said selector in each of said time positions over said groups of pulse paths, means included in said selector and responsive to said modulation of the pulse flow through said pulse gating means for selecting one of the pulses transmitted to said selector over said groups of pulse paths which occurs in a different time position, and means included in said selector and controlled by the pulses selected by said last-named means for gating pulses to said output channel in said different time position.

6. In an automatic telephone system, a plurality of lines having individually assigned thereto different time positions in repetitive time position frames, a selector provided with a pulse input channel and a pulse output channel and including pulse gating means controlled in accordance with the identity of a calling one of said lines for gating pulses to said selector from said pulse input channel in the time position assigned to the calling line, the pulse flow from said pulse input channel through said pulse gating means to said selector being interrupted during a portion of each switch directing impulse transmitted over the calling line, a group of pulse paths, means for sequentially transmitting pulses to said selector in each of said time positions over said group of pulse paths, means included in said selector and responsive to said interruptions in pulse flow through said pulse gating means for selecting one of the pulses transmitted to said selector over said groups of pulse paths which occurs in a different time position, and means included in said selector and controlled by the pulses selected by said last-named means for gating pulses to said output channel in said different time position.

7. In an automatic telephone system, a plurality of lines having individually assigned thereto different time positions in repetitive time position frames, a selector provided with a pulse input channel and a pulse output channel and including pulse gating means controlled in accordance with the identity of a calling one of said lines for gating pulses to said selector from said pulse input channel in the time position assigned to the calling line, the pulse flow from said pulse input channel through said pulse gating means to said selector being interrupted during a portion of each switch directing impulse transmitted over the calling line, a group of pulse paths, means for sequentially transmitting pulses to said selector in each of said time positions over said group of pulse paths, an impulse integrator circuit included in said selector and operative to develop a control pulse in response to each interruption in pulse flow from said pulse input channel through said pulse gating means to said selector, impulse register means included in said selector and responsive to said control pulses to select one of the pulses transmitted to said selector over said groups of pulse paths which occur in a different time position, and means included in said selector and controlled by the pulses selected by said impulse register means for gating pulses to said output channel in said different time position.

8. An impulse responsive signal repeating selector of the pulse multiplex type adapted for selective response to pulses transmitted thereto over a pulse input channel in predetermined time positions of repetitive time position frames and provided with a pulse output channel, comprising pulse gating means for selectively gating

pulses to said selector from said pulse input channel in any one of said time positions, the pulse flow from said pulse input channel through said pulse gating means to said selector being interrupted during a portion of each impulse, a group of pulse paths, means for sequentially transmitting pulses to said selector in each of said time positions over said group of pulse paths, an impulse integrator circuit operative to develop a control pulse in response to each interruption in pulse flow through said pulse gating means to said selector, impulse register means responsive to said control pulses to select one of the pulses transmitted to said selector over said group of pulse paths which occurs in a different time position, and means controlled by the pulses selected by said impulse register means for gating pulses to said output channel in said different time position.

9. An impulse responsive signal repeating selector of the pulse multiplex type adapted for selective response to pulses transmitted thereto over a pulse input channel in predetermined time positions of repetitive time position frames and provided with a pulse output channel, comprising pulse gating means for selectively gating pulses to said selector from said pulse input channel in any one of said time positions, the pulse flow from said pulse input channel through said pulse gating means to said selector being interrupted during a portion of each impulse, an impulse integrator circuit operative to develop a control pulse in response to each interruption in pulse flow through said pulse gating means to said selector, impulse register means comprising a string of electric discharge tubes of the gaseous discharge type, means responsive to said control pulses for firing said tubes in sequence at the rate of one tube each control pulse, and means controlled by the last-fired tube of said string for gating pulses to said output channel in a different time position.

10. An impulse responsive signal repeating selector of the pulse multiplex type adapted for selective response to pulses transmitted thereto over a pulse input channel in predetermined time positions of repetitive time position frames and provided with a pulse output channel, comprising pulse gating means for selectively gating pulses to said selector from said pulse input channel in any one of said time positions, the pulse flow from said pulse input channel through said pulse gating means to said selector being interrupted during a portion of each impulse, an impulse integrator circuit operative to develop a control pulse in response to each interruption in pulse flow through said pulse gating means to said selector, impulse register means comprising a string of electric discharge tubes of the gaseous discharge type, means responsive to said control pulses for firing said tubes in sequence at the rate of one tube for each control pulse, pulse gating circuits individually controlled by said tubes and each operative to gate pulses which the tube controlling the circuit is fired, and means controlled by the pulses gated by the circuit controlled by the last-fired one of said tubes for gating pulses to said output channel in a different time position.

11. A two-digit impulse responsive signal repeating selector of the pulse multiplex type adapted for selective response to pulses transmitted thereto over a pulse input channel in predetermined time positions of repetitive time position frames and provided with a pulse output channel, comprising pulse gating means for selectively gating pulses to said selector from said pulse input channel in any one of said time positions, the pulse flow from said pulse input channel through said pulse gating means being interrupted during a portion of each impulse, an impulse integrator circuit operative to develop a control pulse in response to each interruption in pulse flow through said pulse gating means to said selector, a group of units pulse paths, means for sequentially transmitting units pulses to said selector in each of said time positions over said group of units pulse paths, a group of group pulse paths, means for transmitting group pulses to said selector over said group of group pulse paths, a pair of digit registers successively responsive to the control pulses produced by said integrator circuit during two successive digits and jointly operative to combine one of said group pulses and one of said units pulses to form selector pulses occuring in one of said time positions, and means controlled by said selector pulses for gating pulses to said output channel in said one time position.

12. A two-digit impulse responsive signal repeating selector of the pulse multiplexer type adapted for selective response to pulses transmitted thereto over a pulse input channel in predetermined time positions of repetitive time position frames and provided with a pulse output channel, comprising pulse gating means for selectively gating pulses to said selector from said pulse input channel in any one of said time positions, the pulse flow from said pulse input channel through said pulse gating means being interrupted during a portion of each impulse, an impulse integrator circuit operative to develop a control pulse in response to each interruption in pulse flow through said pulse gating means to said selector, a pair of digit registers each including a string of electric discharge tubes of the gaseous discharge type, means responsive to the control pulses developed by said integrator circuit during a first digit for firing the tubes of one of said strings at the rate of one tube for each control pulse, means responsive to cessation of the control pulses developed during said one digit for rendering said last-named means non-responsive to further control pulses, means responsive to the control pulses developed by said integrator circuit during a second digit for firing the tubes of the other of said strings at the rate of one tube for each control pulse, and means jointly controlled by the last fired tubes of said impulse registers for gating pulses to said output channel in one of said time positions.

13. A two-digit impulse responsive signal repeating selector of the pulse multiplex type adapted for selective response to pulses transmitted thereto over a pulse input channel in predetermined time positions of repetitive time position frames and provided with a pulse output channel, comprising pulse gating means for selectively gating pulses to said selector from said pulse input channel in any one of said time positions, the pulse flow from said pulse input channel through said pulse gating means being interrupted during a portion of each impulse, an impulse integrator circuit operative to develop a control pulse in response to each interruption in pulse flow through said pulse gating means to said selector, a pair of digit registers each including a string of electric discharge tubes of the gaseous discharge type, means responsive to the control pulses developed by said integrator circuit during a first digit for firing the tubes of one of said strings at the rate of one tube for each control pulse, means responsive to cessation of the control pulses developed during said one digit for rendering said last-named means non-responsive to further control pulses, means responsive to the control pulses developed by said integrator circuit during a second digit for firing the tubes of the other of said strings at the rate of one tube for each control pulse, pulse gating circuits individually controlled by said tubes and each operative to gate pulses when the tube controlling the circuit is fired, and means jointly controlled by the pulses gated by the pulse gating circuits controlled by the last fired tubes of said registers for gating pulses to said output channel in one of said time positions.

14. A two-digit impulse responsive signal repeating selector of the pulse multiplex type adapted for selective response to pulses transmitted thereto over a pulse input channel in predetermined time positions of repetitive time position frames and provided with a pulse output channel, comprising pulse gating means for selectively gating pulses to said selector from said pulse input channel in any one of said time positions, the pulse flow from said

pulse input channel through said pulse gating means being interrupted during a portion of each impulse, an impulse integrator circuit operative to develop a control pulse in response to each interruption in pulse flow through said pulse gating means to said selector, a pair of digit registers each including a string of electric discharge tubes of the gaseous discharge type, means responsive to the control pulses developed by said integrator circuit during a first digit for firing the tubes of one of said strings at the rate of one tube for each control pulse, means responsive to cessation of the control pulses developed during said one digit for rendering said last-named means nonresponsive to further control pulses, means responsive to the control pulses developed by said integrator circuit during a second digit for firing the tubes of the other of said strings at the rate of one tube for each control pulse, pulse gating circuits individually controlled by said tubes and each operative to gate pulses when the tube controlling the circuit is fired, means for combining the pulses gated by the pulse gating circuits controlled by the last fired tubes of said registers to form pulses which recur in one of said time positions, and means responsive to said last-named pulses for gating pulses to said output channel in said one time position.

15. A two-digit impulse responsive signal repeating selector of the pulse multiplex type adapted for selective response to pulses transmitted thereto over a pulse input channel in predetermined time positions of repetitive time position frames and provided with a pulse output channel, comprising pulse gating means for selectively gating pulses to said selector from said pulse input channel in any of said time positions, the pulse flow from said pulse input channel through said pulse gating means being interrupted during a portion of each impulse, an impulse integrator circuit operative to develop a control pulse in response to each interruption in pulse flow through said pulse gating means to said selector, a pair of digit registers each including a string of electric discharges tubes of the gaseous discharge type, a pair of gate circuits for respectively repeating said control pulses to said registers, means normally blocking one of said gate circuits against repeating control pulses to its associated register, means responsive to cessation of the control pulses developed during a first impulse digit for opening said one gate circuit and for blocking the other gate circuit against repeating said control pulses to the associated register, whereby the control pulses developed during said first digit are repeated to one of said registers and the control pulses developed during a second and succeeding digit are repeated to the other of said registers, each of said registers including means for firing the tubes of the register in sequence as the control pulses are repeated thereto, and means jointly controlled by the last fired tubes of said registers for gating pulses to said output channel in one of said time positions.

16. A two-digit impulse responsive signal repeating selector of the pulse multiplex type adapted for selective response to pulses transmitted thereto over a pulse input channel in predetermined time positions of repetitive time position frames and provided with a pulse output channel, comprising pulse gating means for selectively gating pulses to said selector from said pulse input channel in any one of said time positions, the pulse flow from said pulse input channel through said pulse gating means being interrupted during a portion of each impulse, an impulse integrator circuit operative to develop a control pulse in response to each interruption in pulse flow through said pulse gating means to said selector, a pair of digit registers each including a string of electric discharge tubes of the gaseous discharge type, a pair of gate circuits for respectively repeating said control pulses to said registers, means normally blocking one of said gate circuits against repeating control pulses to its associated register, means responsive to cessation of the control pulses developed during a first impulse digit for opening said one gate circuit and for blocking the other gate circuit against repeating said control pulses to the associated register, whereby the control pulses developed during said first digit are repeated to one of said registers and the control pulses developed during a second and succeeding digit are repeated to the other of said registers, each of said registers including means for firing the tubes of the register in sequence as the control pulses are repeated thereto, pulse gating circuits individually controlled by said tubes and each operative to gate pulses when the tube controlling the circuit is fired, and means jointly controlled by the pulses gated by the pulse gating circuits controlled by the last fired tubes of said registers for gating pulses to said output channel in one of said time positions.

17. A two-digit impulse responsive signal repeating selector of the pulse multiplex type adapted for selective response to pulses transmitted thereto over a pulse input channel in predetermined time positions of repetitive time position frames and provided with a pulse output channel, comprising pulse gating means for selectively gating pulses to said selector from said pulse input channel in any one of said time positions, means for interrupting the pulse flow from said pulse input channel through said pulse gating means during a portion of each impulse, an impulse integrator circuit operative to develop a control pulse in response to each interruption in pulse flow through said pulse gating means to said selector, a pair of digit registers each including a string of electric discharge tubes of the gaseous discharge type, a pair of gate circuits for respectively repeating said control pulses to said registers, means normally blocking one of said gate circuits against repeating control pulses to is associated register, means responsive to cessation of the control pulses developed during a first impulse digit for opening said one gate circuit and for blocking the other gate circuit against repeating said control pulses to the associated register, whereby the control pulses developed during said first digit are repeated to one of said registers and the control pulses developed during a second and succeeding digit are repeated to the other of said registers, each of said registers including means for firing the tubes of the register in sequence as the control pulses are repeated thereto, pulse gating circuits individually controlled by said tubes and each operative to gate pulses when the tube controlling the circuit is fired, means for combining the pulses gated by the pulse gating circuits controlled by the last fired tubes of said registers to form pulses which recur in one of said time positions, and means responsive to said last-named pulses for gating pulses to said output channel in said one time position.

18. In an automatic telephone system which includes a plurality of lines having individually assigned thereto different time positions in repetitive time position frames, an impulse responsive signal repeating selector provided with a gate pulse input channel, a signal pulse input channel, a busy pulse input channel and a signal pulse output channel, and including, in combination, pulse gating means controlled by pulses transmitted to said selector over said gate pulse channel in the time position assigned to a calling one of said lines for gating pulses to said selector from said signal pulse input channel in the same time position, means for modulating the pulses gated to said selector by said pulse gating means in accordance with signals derived from the calling line and for interrupting the flow of pulses through said pulse gating means during a portion of each impulse transmitted over the calling line, a signal reconstructing circuit controlled by said pulse gating means to reconstruct the signals modulated on the pulses gated by said pulse gating means, an impulse integrator circuit contnrolled by said reconstructor circuit to develop a control pulse in response to each interruption in pulse flow through said pulse gating means to said selector, a pair of digit registers each including a string of gaseous discharge

tubes, a pair of control pulse gate circuits for respectively repeating said control pulses to said registers, means normally blocking one of said control pulse gate circuits against repeating control pulses to its associated register, means responsive to cessation of the control pulses developed during a first impulse digit for opening said one control pulse gate circuit and for blocking the other control pulse gate circuit against repeating said control pulses to the associated register, whereby the control pulses developed during said first digit are repeated to one of said registers and the control pulses developed during a second and succeeding digit are repeated to the other of said registers, each of said registers including means for firing the tubes of the register in sequence as the control pulses are repeated thereto, pulse gating circuits individually controlled by said tubes and each operative to gate pulses when the tube controlling the circuit is fired, means for combining the pulses gated by the pulse gating circuits controlled by the last-fired tubes of said registers to form selector pulses which occur in the time position assigned to a called one of said lines, means for impressing busy pulses on said busy pulse channel in the time positions of other busy lines of the system, a busy test circuit for comparing the time position of said selector pulses with the time positions of busy pulses fed to said selector over said busy pulse channel, thereby to determine whether the called line is idle or busy, means jointly controlled by said busy test circuit and said selector pulses for gating pulses to said output channel in the time position assigned to the called line in the event said selector pulses are not coincident with busy pulses fed to said selector over said busy pulse channel, and means for modulating the pulses gated to said output channel with the signals reconstructed by said reconstructor circuit.

19. In an automatic telephone system which includes a plurality of lines having individually assigned thereto different time positions in repetitive time position frames, an impulse responsive signal repeating selector provided with a gate pulse input channel, a signal pulse input channel, a busy pulse input channel and a signal pulse output channel, and including, in combination, pulse gating means controlled by pulses transmitted to said selector over said gate pulse channel in the time position assigned to a calling one of said lines for gating pulses to said selector from said signal pulse input channel in the same time position, means for modulating the pulses gated to said selector by said pulse gating means in accordance with signals derived from the calling line and for interrupting the flow of pulses through said pulse gating means during a portion of each impulse transmitted over the calling line, a signal reconstructing circuit controlled by said pulse gating means to reconstruct the signals modulated on the pulses gated by said pulse gating means, an impulse integrator circuit controlled by said reconstructor circuit to develop a control pulse in response to each interruption in pulse flow through said pulse gating means to said selector, a pair of digit registers each including a string of gaseous discharge tubes, a pair of control pulse gate circuits for respectively repeating said control pulses to said registers, means normally blocking one of said control pulse gate circuits against repeating control pulses to its associated register, means responsive to cessation of the control pulses developed during a first impulse digit for opening said one control pulse gate circuit and for blocking the other control pulse gate circuit against repeating said control pulses to the associated register, whereby the control pulses developed during said first digit are repeated to one of said registers and the control pulses developed during a second and succeeding digit are repeated to the other of said registers, each of said registers including means for firing the tubes of the register in sequence as the control pulses are repeated thereto, pulse gating circuits individually controlled by said tubes and each operative to gate pulses when the tube controlling the circuit is fired, means for combining the pulses gated by the pulse gating circuits controlled by the last-fired tubes of said registers to form selector pulses which occur in the time position assigned to a called one of said lines, means for impressing busy pulses on said busy pulse channel in the time positions of other busy lines of the system, a busy test circuit for comparing the time position of said selector pulses with the time positions of busy pulses fed to said selector over said busy pulse channel, thereby to determine whether the called line is idle or busy, means jointly controlled by said busy test circuit and said selector pulses for gating pulses to said output channel in the time position assigned to the called line in the event said selector pulses are not coincident with busy pulses fed to said selector over said busy pulse channel, means for preventing said last-named means from operating in the event said selector pulses are coincident with busy pulses fed to said selector over said busy pulse channel, and means for modulating the pulses gated to said output channel with the signals reconstructed by said reconstructor circuit.

20. In an automatic telephone system which includes a plurality of lines having individually assigned thereto different time positions in repetitive time position frames, an impulse responsive signal repeating selector provided with a gate pulse input channel, a signal pulse input channel, a busy pulse input channel and a signal pulse output channel, and including, in combination, pulse gating means controlled by pulses transmitted to said selector over said gate pulse channel in the time position assigned to a calling one of said lines for gating pulses to said selector from said signal pulse input channel in the same time position, means for modulating the pulses gated to said selector by said pulse gating means in accordance with signals derived from the calling line and for interrupting the flow of pulses through said pulse gating means during a portion of each impulse transmitted over the calling line, a signal reconstructing circuit controlled by said pulse gating means to reconstruct the signals modulated on the pulses gated by said pulse gating means, an impulse integrator circuit controlled by said reconstructor circuit to develop a control pulse in response to each interruption in pulse flow through said pulse gating means to said selector, a pair of digit registers each including a string of gaseous discharge tubes, a pair of control pulse gate circuits for respectively repeating said control pulses to said registers, means normally blocking one of said control pulse gate circuits against repeating control pulses to its associated register, means responsive to cessation of the control pulses developed during a first impulse digit for opening said one control pulse gate circuit and for blocking the other control pulse gate circuit against repeating said control pulses to the associated register, whereby the control pulses developed during said first digit are repeated to one of said registers and the control pulses developed during a second and succeeding digit are repeated to the other of said registers, each of said registers including means for firing the tubes of the register in sequence as the control pulses are repeated thereto, pulse gating circuits individually controlled by said tubes and each operative to gate pulses when the tube controlling the circuit is fired, means for combining the pulses gated by the pulse gating circuits controlled by the last-fired tubes of said registers to form selector pulses which occur in the time position assigned to a called one of said lines, means for impressing busy pulses on said busy pulse channel in the time positions of other busy lines of the system, a busy test circuit for comparing the time position of said selector pulses with the time positions of busy pulses fed to said selector over said busy pulse channel, thereby to determine whether the called line is idle or busy, means jointly controlled by said busy test circuit and said selector pulses for gating pulses to said output channel in the time position assigned to the

called line in the event said selector pulses are not coincident with busy pulses fed to said selector over said busy pulse channel, means for modulating the pulses gated to said output channel with the signals reconstructed by said reconstructor circuit, and a busy pulse gate circuit jointly controlled by said selector pulses and said busy test circuit for releasing busy pulses to said busy pulse channel in the time position assigned to the called line.

21. In an automatic telephone system which includes a plurality of lines having individually assigned thereto different time positions in repetitive time position frames, an impulse responsive signal repeating selector provided with a gate pulse input channel, a signal pulse input channel, a busy pulse input channel and a signal pulse output channel, and including, in combination, pulse gating means controlled by pulses transmitted to said selector over said gate pulse channel in the time position assigned to a calling one of said lines for gating pulses to said selector from said signal pulse input channel in the same time position, means for modulating the pulses gated to said selector by said pulse gating means in accordance with signals derived from the calling line and for interrupting the flow of pulses through said pulse gating means during a portion of each impulse transmitted over the calling line, a signal reconstructing circuit controlled by said pulse gating means to reconstruct the signals modulated on the pulses gated by said pulse gating means, an impulse integrator circuit controlled by said reconstructor circuit to develop a control pulse in response to each interruption in pulse flow through said pulse gating means to said selector, a pair of digit registers each including a string of gaseous discharge tubes, a pair of control pulse gate circuits for respectively repeating said control pulses to said registers, means normally blocking one of said control pulse gate circuits against repeating control pulses to its associated register, means responsive to cessation of the control pulses developed during a first impulse digit for opening said one control pulse gate circuit and for blocking the other control pulse gate circuit against repeating said control pulses to the associated register, whereby the control pulses developed during said first digit are repeated to one of said registers and the control pulses developed during a second and succeeding digit are repeated to the other of said registers, each of said registers including means for firing the tubes of the register in sequence as the control pulses are repeated thereto, pulse gating circuits individually controlled by said tubes and each operative to gate pulses when the tube controlling the circuit is fired, means for combining the pulses gated by the pulse gating circuits controlled by the last-fired tubes of said registers to form selector pulses which occur in the time position assigned to a called one of said lines, means for impressing busy pulses on said busy pulse channel in the time positions of other busy lines of the system, a busy test circuit for comparing the time position of said selector pulses with the time positions of busy pulses fed to said selector over said busy pulse channel, thereby to determine whether the called line is idle or busy, means jointly controlled by said busy test circuit and said selector pulses for gating pulses to said output channel in the time position assigned to the called line in the event said selector pulses are not coincident with busy pulses fed to said selector over said busy pulse channel, means for preventing said last-named means from operating in the event said selector pulses are coincident with busy pulses fed to said selector over said busy pulse channel, means for modulating the pulses gated to said output channel with the signals reconstructed by said reconstructor circuit, and a busy pulse gate circuit jointly controlled by said selector pulses and said busy test circuit for releasing busy pulses to said busy pulse channel in the time position assigned to the called line.

22. In an automatic telephone system which includes a plurality of lines having individually assigned thereto different time positions in repetitive time position frames, an impulse responsive signal repeating selector provided with a gate pulse input channel, a signal pulse input channel, a busy pulse input channel and a signal pulse output channel, and including, in combination, pulse gating means controlled by pulses transmitted to said selector over said gate pulse channel in the time position assigned to a calling one of said lines for gating pulses to said selector from said signal pulse input channel in the same time position, means for modulating the pulses gated to said selector by said pulse gating means in accordance with signals derived from the calling line and for interrupting the flow of pulses through said pulse gating means during a portion of each impulse transmitted over the calling line, a signal reconstructing circuit controlled by said pulse gating means to reconstruct the signals modulated on the pulses gated by said pulse gating means, an impulse integrator circuit controlled by said reconstructor circuit to develop a control pulse in response to each interruption in pulse flow through said pulse gating means to said selector, a pair of digit registers each including a string of gaseous discharge tubes, a pair of control pulse gate circuits for respectively repeating said control pulses to said registers, means normally blocking one of said control pulse gate circuits against repeating control pulses to its associated register, means responsive to cessation of the control pulses developed during a first impulse digit for opening said one control pulse gate circuit and for blocking the other control pulse gate circuit against repeating said control pulses to the associated register, whereby the control pulses developed during said first digit are repeated to one of said registers and the control pulses developed during a second and succeeding digit are repeated to the other of said registers, each of said registers including means for firing the tubes of the register in sequence as the control pulses are repeated thereto, pulse gating circuits individually controlled by said tubes and each operative to gate pulses when the tube controlling the circuit is fired, means for combining the pulses gated by the pulse gating circuits controlled by the last-fired tubes of said registers to form selector pulses which occur in the time position assigned to a called one of said lines, means for impressing busy pulses on said busy pulse channel in the time positions of other busy lines of the system, a busy test circuit for comparing the time position of said selector pulses with the time positions of busy pulses fed to said selector over said busy pulse channel, thereby to determine whether the called line is idle or busy, means jointly controlled by said busy test circuit and said selector pulses for gating pulses to said output channel in the time position assigned to the called line in the event said selector pulses are not coincident with busy pulses fed to said selector over said busy pulse channel, means for initially modulating the pulses gated to said output channel with a ringing control signal, a gate circuit controlled by said selector pulses and conditioned to admit pulses to said selector from said signal pulse input channel in the time position assigned to the called line in response to operation of said busy test circuit, a ring trip circuit operative in response to the gating of pulses by said last-named gate circuit, means responsive to operation of said ring trip circuit for removing said ringing control signal modulation from the pulses gated to said output channel, and means for thereafter modulating the pulses gated to said output channel with the signals reconstructed by said reconstructor circuit.

23. In an automatic telephone system which includes a plurality of lines having individually assigned thereto different time positions in repetitive time position frames, an impulse responsive signal repeating selector provided with a gate pulse input channel, a signal pulse input channel, a busy pulse input channel and a signal pulse output channel, and including, in combination, pulse gating means controlled by pulses transmitted to said selector over said

gate pulse channel in the time position assigned to a calling one of said lines for gating pulses to said selector from said signal pulse input channel in the same time position, means for modulating the pulses gated to said selector by said pulse gating means in accordance with signals derived from the calling line and for interrupting the flow of pulses through said pulse gating means during a portion of each impulse transmitted over the calling line, a signal reconstructing circuit controlled by said pulse gating means to reconstruct the signals modulated on the pulses gated by said pulse gating means, an impulse integrator circuit controlled by said reconstructor circuit to develop a control pulse in response to each interruption in pulse flow through said pulse gating means to said selector, a pair of digit registers each including a string of gaseous discharge tubes, a pair of control pulse gate circuits for respectively repeating said control pulses to said registers, means normally blocking one of said control pulse gate circuits against repeating control pulses to its associated register, means responsive to cessation of the control pulses developed during a first impulse digit for opening said one control pulse gate circuit and for blocking the other control pulse gate circuit against repeating said control pulses to the associated register, whereby the control pulses developed during said first digit are repeated to one of said registers and the control pulses developed during a second and succeeding digit are repeated to the other of said registers, each of said registers including means for firing the tubes of the register in sequence as the control pulses are repeated thereto, pulse gating circuits individually controlled by said tubes and each operative to gate pulses when the tube controlling the circuit is fired, means for combining the pulses gated by the pulse gating circuits controlled by the last-fired tubes of said registers to form selector pulses which occur in the time position assigned to a called one of said lines, means for impressing busy pulses on said busy pulse channel in the time positions of other busy lines of the system, a busy test circuit for comparing the time position of said selector pulses with the time positions of busy pulses fed to said selector over said busy pulse channel, thereby to determine whether the called line is idle or busy, means jointly controlled by said busy test circuit and said selector pulses for gating pulses to said output channel in the time position assigned to the called line in the event said selector pulses are not coincident with busy pulses fed to said selector over said busy pulse channel, means for preventing said last-named means from operating in the event said selector pulses occur coincidentally with busy pulses fed to said selector over said busy pulse channel, means operative in the event the called line tests idle for initially modulating the pulses gated to said output channel with a ringing control signal, a gate circuit controlled by said selector pulses and conditioned to admit pulses to said selector from said signal pulse input channel in the time position assigned to the called line in response to operation of said busy test circuit, a ring trip circuit operative in response to the gating of pulses by said last-named gate circuit, means responsive to operation of said ring trip circuit for removing said ringing control signal modulation from the pulses gated to said output channel, and means for thereafter modulating the pulses gated to said output channel with the signals reconstructed by said reconstructor circuit.

24. In an automatic telephone system which includes a plurality of lines having individually assigned thereto different time positions in repetitive time position frames, an impulse responsive signal repeating selector provided with a gate pulse input channel, a signal pulse input channel, a busy pulse input channel and a signal pulse output channel, and including, in combination, pulse gating means controlled by pulses transmitted to said selector over said gate pulse channel in the time position assigned to a calling one of said lines for gating pulses to said selector from said signal pulse input channel in the same time position, means for modulating the pulses gated to said selector by said pulse gating means in accordance with signals derived from the calling line and for interrupting the flow of pulses through said pulse gating means during a portion of each impulse transmitted over the calling line, a signal reconstructing circuit controlled by said pulse gating means to reconstruct the signals modulated on the pulses gated by said pulse gating means, an impulse integrator circuit controlled by said reconstructor circuit to develop a control pulse in response to each interruption in pulse flow through said pulse gating means to said selector, a pair of digit registers each including a string of gaseous discharge tubes, a pair of control pulse gate circuits for respectively repeating said control pulses to said registers, means normally blocking one of said control pulse gate circuits against repeating control pulses to its associated register, means responsive to cessation of the control pulses developed during a first impulse digit for opening said one control pulse gate circuit and for blocking the other control pulse gate circuit against repeating said control pulses to the associated register, whereby the control pulses developed during said first digit are repeated to one of said registers and the control pulses developed during a second and succeeding digit are repeated to the other of said registers, each of said registers including means for firing the tubes of the register in sequence as the control pulses are repeated thereto, pulse gating circuits individually controlled by said tubes and each operative to gate pulses when the tube controlling the circuit is fired, means for combining the pulses gated by the pulse gating circuits controlled by the last-fired tubes of said registers to form selector pulses which occur in the time position assigned to a called one of said lines, means for impressing busy pulses on said busy pulse channel in the time positions of other busy lines of the system, a busy test circuit for comparing the time position of said selector pulses with the time positions of busy pulses fed to said selector over said busy pulse channel, thereby to determine whether the called line is idler or busy, means jointly controlled by said busy test circuit and said selector pulses for gating pulses to said output channel in the time position assigned to the called line in the event said selector pulses are not coincident with busy pulses fed to said selector over said busy pulse channel, a busy pulse gate circuit jointly controlled by said selector pulses and said busy test circuit for releasing busy pulses to said busy pulse channel in the time position assigned to the called line, means for initially modulating the pulses gated to said output channel with a ringing control signal, a gate circuit controlled by said selector pulses and conditioned to admit pulses to said selector from said signal pulse input channel in the time position assigned to the called line in response to operation of said busy test circuit, a ring trip circuit operative in response to the gating of pulses by said last-named gate circuit, means responsive to operation of said ring trip circuit for removing said ringing control signal modulation from the pulses gated to said output channel, and means for thereafter modulating the pulses gated to said output channel with the signals reconstructed by said reconstructor circuit.

25. In an automatic telephone system which includes a plurality of lines having individually assigned thereto different time positions in repetitive time position frames, an impulse responsive signal repeating selector provided with a gate pulse input channel, a signal pulse input channel, a busy pulse input channel and a signal pulse output channel, and including, in combination, pulse gating means controlled by pulses transmitted to said selector over said gate pulse channel in the time position assigned to a calling one of said lines for gating pulses to said selector from said signal pulse input channel in the same time position, means for modulating the pulses gated

to said selector by said pulse gating means in accordance with signals derived from the calling line and for interrupting the flow of pulses through said pulse gating means during a portion of each impulse transmitted over the calling line, a signal reconstructing circuit controlled by said pulse gating means to reconstruct the signals modulated on the pulses gated by said pulse gating means, an impulse integrator circuit controlled by said reconstructor circuit to develop a control pulse in response to each interruption in pulse flow through said pulse gating means to said selector, a pair of digit registers each including a string of gaseous discharge tubes, a pair of control pulse gate circuits for respectively repeating said control pulses to said registers, means normally blocking one of said control pulse gate circuits against repeating control pulses to its associated register, means responsive to cessation of the control pulses developed during a first impulse digit for opening said one control pulse gate circuit and for blocking the other control pulse gate circuit against repeating said control pulses to the associated register, whereby the control pulses developed during said first digit are repeated to one of said registers and the control pulses developed during a second and succeeding digit are repeated to the other of said registers, each of said registers including means for firing the tubes of the register in sequence as the control pulses are repeated thereto, pulse gating circuits individually controlled by said tubes and each operative to gate pulses when the tube controlling the circuit is fired, means for combining the pulses gated by the pulse gating circuits controlled by the last-fired tubes of said registers to form selector pulses which occur in the time position assigned to a called one of said lines, means for impressing busy pulses on said busy pulse channel in the time positions of other busy lines of the system, a busy test circuit for comparing the time position of said selector pulses with the time positions of busy pulses fed to said selector over said busy pulse channel, thereby to determine whether the called line is idle or busy, means jointly controlled by said busy test circuit and said selector pulses for gating pulses to said output channel in the time position assigned to the called line in the event said selector pulses are not coincident with busy pulses fed to said selector over said busy pulse channel, means for preventing said last-named means from operating in the event said selector pulses occur coincidentally with busy pulses fed to said selector over said busy pulse channel, a busy pulse gate circuit jointly controlled by said selector pulses and said busy test circuit for releasing busy pulses to said busy pulse channel in the time position assigned to the called line in the event the called line tests idle, means operative in the event the called line tests idle for initially modulating the pulses gated to said ouput channel with a ringing control signal, a gate circuit controlled by said selector pulses and conditioned to admit pulses to said selector from said signal pulse input channel in the time position assigned to the called line in response to operation of said busy test circuit, a ring trip circuit operative in response to the gating of pulses by said last-named gate circuit, means responsive to operation of said ring trip circuit for removing said ringing control signal modulation from the pulses gated to said output channel, and means for thereafter modulating the pulses gated to said output channel with the signals reconstructed by said reconstructor circuit.

26. In an automatic telephone system which includes a plurality of lines having individually assigned thereto different time positions in repetitive time position frames, an impulse responsive signal repeating selector provided with a gate pulse input channel, a signal pulse input channel, a busy pulse input channel and a signal pulse output channel, and including, in combination, first pulse gating means controlled by pulses transmitted to said selector over said gate pulse channel in the time position assigned to a calling one of said lines for gating pulses to said selector from said signal pulse input channel in the same time position, second pulse gating means controlled by pulses transmitted to said selector over said gate pulse channel in the time position assigned to the calling line for gating pulses to said output channel in the same time position, means for modulating the pulses gated to said selector by said first pulse gating means in accordance with signals derived from the calling line and for interrupting the flow of pulses through said first pulse gating means during a portion of each impulse transmitted over the calling line, a signal reconstructing circuit controlled by said first pulse gating means to reconstruct the signals modulated on the pulses gated by said pulse gating means, an impulse integrator circuit controlled by said reconstructor circuit to develop a control pulse in response to each interruption in pulse flow through said pulse gating means to said selector, a pair of digit registers each including a string of gaseous discharge tubes, a pair of control pulse gate circuits for respectively repeating said control pulses to said registers, means normally blocking one of said control pulse gate circuits against repeating control pulses to its associated register, means responsive to cessation of the control pulses developed during a first impulse digit for opening said one control pulse gate circuit and for blocking the other control pulse gate circuit against repeating said control pulses to the associated register, whereby the control pulses developed during said first digit are repeated to one of said registers and the control pulses developed during a second and succeeding digit are repeated to the other of said registers, each of said registers including means for firing the tubes of the register in sequence as the control pulses are repeated thereto, pulse gating circuits individually controlled by said tubes and each operative to gate pulses when the tube controlling the circuit is fired, means for combining the pulses gated by the pulse gating circuits controlled by the last-fired tubes of said registers to form selector pulses which occur in the time position assigned to a called one of said lines, means for impressing busy pulses on said busy pulse channel in the time positions of other busy lines of the system, busy test means for comparing the time position of said selector pulses with the time positions of busy pulses fed to said selector over said busy pulse channel, thereby to determine whether the called line is idle or busy, and means controlled by said busy test means for modulating the pulses gated to said output channel by said second pulse gating means with a busy signal in the event said selector pulses occur coincidentally with busy pulses fed to said selector over said busy pulse channel.

27. In an automatic telephone system which includes a plurality of lines having individually assigned thereto different time positions in repetitive time position frames, an impulse responsive signal repeating selector provided with a gate pulse input channel, a signal pulse input channel, a busy pulse input channel and a signal pulse output channel, and including, in combination, first pulse gating means controlled by pulses transmitted to said selector over said gate pulse channel in the time position assigned to a calling one of said lines for gating pulses to said selector from said signal pulse input channel in the same time position, second pulse gating means controlled by pulses transmitted to said selector over said gate pulse channel in the time position assigned to the calling line for gating pulses to said output channel in the same time position, means for modulating the pulses gated to said selector by said first pulse gating means in accordance with signals derived from the calling line and for interrupting the flow of pulses through said first pulse gating means during a portion of each impulse transmitted over the calling line, a signal reconstructing circuit controlled by said first pulse gating means to reconstruct the signals modulated on the pulses gated by said pulse gating means, an impulse integrator circuit controlled by said reconstructor circuit to develop a control pulse in response to each interruption in pulse flow through said

pulse gating means to said selector, a pair of digit registers each including a string of gaseous discharge tubes, a pair of control pulse gate circuits for respectively repeating said control pulses to said registers, means normally blocking one of said control pulse gate circuits against repeating control pulses to its associated register, means responsive to cessation of the control pulses developed during a first impulse digit for opening said one control pulse gate circuit and for blocking the other control pulse gate circuit against repeating said control pulses to the associated register, whereby the control pulses developed during said first digit are repeated to one of said registers and the control pulses developed during a second and succeeding digit are repeated to the other of said registers, each of said registers including means for firing the tubes of the register in sequence as the control pulses are repeated thereto, pulse gating circuits individually controlled by said tubes and each operative to gate pulses when the tube controlling the circuit is fired, means for combining the pulses gated by the pulse gating circuits controlled by the last-fired tubes of said registers to form selector pulses which occur in the time position assigned to a called one of said lines, means for impressing busy pulses on said busy pulse channel in the time positions of other busy lines of the system, busy test means for comparing the time position of said selector pulses with the time positions of busy pulses fed to said selector over said busy pulse channel, thereby to determine whether the called line is idle or busy, means controlled by said busy test means for modulating the pulses gated to said output channel by said second pulse gating means with a busy signal in the event said selector pulses occur coincidentally with busy pulses fed to said selector over said busy pulse channel, means jointly controlled by said busy test means and said selector pulses for gating pulses to said output channel in the time position assigned to the calling line in the event said selector pulses do not occur coincidentally with busy pulses fed to said selector over said busy pulse channel, and means for modulating the pulses gated to said output channel by said last-named means with the signals reconstructed by said reconstructor circuit.

28. In an automatic telephone system which includes a plurality of lines having individually assigned thereto different time positions in repetitive time position frames, an impulse responsive signal repeating selector provided with a gate pulse input channel, a signal pulse input channel, a busy pulse input channel and a signal pulse output channel, and including, in combination, first pulse gating means controlled by pulses transmitted to said selector over said gate pulse channel in the time position assigned to a calling one of said lines for gating pulses to said selector from said signal pulse input channel in the same time position, second pulse gating means controlled by pulses transmitted to said selector over said gate pulse channel in the time position assigned to the calling line for gating pulses to said output channel in the same time position, means for modulating the pulses gated to said selector by said first pulse gating means in accordance with signals derived from the calling line and for interrupting the flow of pulses through said first pulse gating means during a portion of each impulse transmitted over the calling line, a signal reconstructing circuit controlled by said first pulse gating means to reconstruct the signals modulated on the pulses gated by said pulse gating means, an impulse integrator circuit controlled by said reconstructor circuit to develop a control pulse in response to each interruption in pulse flow through said pulse gating means to said selector, a pair of digit registers each including a string of gaseous discharge tubes, a pair of control pulse gate circuits for respectively repeating said control pulses to said registers, means normally blocking one of said control pulse gate circuits against repeating control pulses to its associated register, means responsive to cessation of the control pulses developed during a first impulse digit for opening said one control pulse gate circuit and for blocking the other control pulse gate circuit against repeating said control pulses to the associated register, whereby the control pulses developed during said first digit are repeated to one of said registers and the control pulses developed during a second and succeeding digit are repeated to the other of said registers, each of said registers including means for firing the tubes of the registers in sequence as the control pulses are repeated thereto, pulse gating circuits individually controlled by said tubes and each operative to gate pulses when the tube controlling the circuit is fired, means for combining the pulses gated by the pulse gating circuits controlled by the last-fired tubes of said registers to form selector pulses which occur in the time position assigned to a called one of said lines, means for impressing busy pulses on said busy pulse channel in the time positions of other busy lines of the system, busy test means for comparing the time position of said selector pulses with the time positions of busy pulses fed to said selector over said busy pulse channel, thereby to determine whether the called line is idle or busy, means controlled by said busy test means for modulating the pulses gated to said output channel by said second pulse gating means with a busy signal in the event said selector pulses occur coincidentally with busy pulses fed to said selector over said busy pulse channel, third pulse gating means jointly controlled by said busy test means and said selector pulses for gating pulses to said output channel in the time position assigned to the calling line in the event said selector pulses do not occur coincidentally with busy pulses fed to said selector over said busy pulse channel, means for initially modulating the pulses gated to said output channel by said third pulse gating means with a ringing control signal, means for concurrently modulating the pulses gated to said output channel by said second pulse gating means with a ring back tone signal, fourth pulse gating means controlled by said selector pulses and conditioned to admit pulses to said selector from said signal input channel in the time position assigned to the called line in response to operation of said busy test means to indicate that the called line is idle, a ring trip circuit operative in response to the gating of pulses by said fourth pulse gating means, means responsive to operation of said ring trip circuit for removing said ringing control signal modulation from the pulses gated to said output channel by said third pulse gating means and for removing said ring back tone modulation from the pulses gated to said output channel by said second pulse gating means, and means for thereafter modulating the pulses gated to said output channel by said third pulse gating means with the signals reconstructed by said reconstructor circuit.

29. In an automatic telephone system which includes a plurality of lines having individually assigned thereto different time positions in repetitive time position frames, an impulse responsive signal repeating selector provided with a gate pulse input channel, a signal pulse input channel, a busy pulse input channel and a signal pulse output channel, and including, in combination, first pulse gating means controlled by pulses transmitted to said selector over said gate pulse channel in the time position assigned to a calling one of said lines for gating pulses to said selector from said signal pulse input channel in the same time position, second pulse gating means controlled by pulses transmitted to said selector over said gate pulse channel in the time position assigned to the calling line for gating pulses to said output channel in the same time position, means responsive to the operative association of said selector with the calling line for modulating the pulses gated to said output channel by said second pulse gating means with a dial tone signal, means for modulating the pulses gated to said selector by said first pulse gating means in accordance with signals derived from the calling line and for interrupting the flow of pulses through said first pulse gating means during a portion of each im-

pulse transmitted over the calling line, a signal reconstructing circuit controlled by said first pulse gating means to reconstruct the signals modulated on the pulses gated by said pulse gating means, an impulse integrator circuit controlled by said reconstructor circuit to develop a control pulse in response to each interruption in pulse flow through said pulse gating means to said selector, means responsive to the first control pulse developed by said impulse integrator circuit for removing the dial tone modulation from the pulses gated to said output channel by said second pulse gating means, a pair of digit registers each including a string of gaseous discharge tubes, a pair of control pulse gate circuits for respectively repeating said control pulses to said registers, means normally blocking one of said control pulse gate circuits against repeating control pulses to its associated register, means responsive to cessation of the control pulses developed during a first impulse digit for opening said one control pulse gate circuit and for blocking the other control pulse gate circuit against repeating said control pulses to the associated register, whereby the control pulses developed during said first digit are repeated to one of said registers and the control pulses developed during a second and succeeding digit are repeated to the other of said registers, each of said registers including means for firing the tubes of the register in sequence as the control pulses are repeated thereto, pulse gating circuits individually controlled by said tubes and each operative to gate pulses when the tube controlling the circuit is fired, means for combining the pulses gated by the pulse gating circuits controlled by the last-fired tubes of said registers to form selector pulses which occur in the time position assigned to a called one of said lines, means for impressing busy pulses on said busy pulse channel in the time positions of other busy lines of the system, busy test means for comparing the time position of said selector pulses with the time positions of busy pulses fed to said selector over said busy pulse channel, thereby to determine whether the called line is idle or busy, means jointly controlled by said busy test means and said selector pulses for gating pulses to said output channel in the time position assigned to the called line in the event said selector pulses are not coincident with busy pulses fed to said selector over said busy pulse channel, and means for modulating the pulses gated to said output channel with the signals reconstructed by said reconstructor circuit.

30. In an automatic telephone system which includes a plurality of lines having individually assigned thereto different time positions in repetitive time position frames, an impulse responsive signal repeating selector provided with a gate pulse input channel, a signal pulse input channel, a busy pulse input channel and a signal pulse output channel, and including, in combination, first pulse gating means controlled by pulses transmitted to said selector over said gate pulse channel in the time position assigned to a calling one of said lines for gating pulses to said selector from said signal pulse input channel in the same time position, second pulse gating means controlled by pulses transmitted to said selector over said gate pulse channel in the time position assigned to the calling line for gating pulses to said output channel in the same time position, means responsive to the operative association of said selector with the calling line for modulating the pulses gated to said output channel by said second pulse gating means with a dial tone signal, means for modulating the pulses gated to said selector by said first pulse gating means in accordance with signals derived from the calling line and for interrupting the flow of pulses through said first pulse gating means during a portion of each impulse transmitted over the calling line, a signal reconstructing circuit controlled by said first pulse gating means to reconstruct the signals modulated on the pulses gated by said pulse gating means, an impulse integrator circuit controlled by said reconstructor circuit to develop a control pulse in response to each interruption in pulse flow through said pulse gating means to said selector, means responsive to the first control pulse developed by said impulse integrator circuit for removing the dial tone modulation from the pulses gated to said output channel by said second pulse gating means, a pair of digit registers each including a string of gaseous discharge tubes, a pair of control pulse gate circuits for respectively repeating said control pulses to said registers, means normally blocking one of said control pulse gate circuits against repeating control pulses to its associated register, means responsive to cessation of the control pulses developed during a first impulse digit for opening said one control pulse gate circuit and for blocking the other control pulse gate circuit against repeating said control pulses to the associated register, whereby the control pulses developed during said first digit are repeated to one of said registers and the control pulses developed during a second and succeeding digit are repeated to the other of said registers, each of said registers including means for firing the tubes of the register in sequence as the control pulses are repeated thereto, pulse gating circuits individually controlled by said tubes and each operative to gate pulses when the tube controlling the circuit is fired, means for combining the pulses gated by the pulse gating circuits controlled by the last-fired tubes of said registers to form selector pulses which occur in the time position assigned to a called one of said lines, means for impressing busy pulses on said busy pulse channel in the time positions of other busy lines of the system, busy test means for comparing the time position of said selector pulses with the time positions of busy pulses fed to said selector over said busy pulse channel, thereby to determine whether the called line is idle or busy, third pulse gating means jointly controlled by said busy test means and said selector pulses for gating pulses to said output channel in the time position assigned to the calling line in the event said selector pulses do not occur coincidentally with busy pulses fed to said selector over said busy pulse channel, means for initially modulating the pulses gated to said output channel by said third pulse gating means with a ringing control signal means for concurrently modulating the pulses gated to said output channel by said second pulse gating means with a ring back tone signal, fourth pulse gating means controlled by said selector pulses and conditioned to admit pulses to said selector from said signal input channel in the time position assigned to the called line in respone to operation of said busy test means to indicate that the called line is idle, a ring trip circuit operative in response to the gating of pulses by said fourth pulse gating means, means responsive to operation of said ring trip circuit for removing said ringing control signal modulation from the pulses gated to said output channel by said third pulse gating means and for removing said ring back tone modulation from the pulses gated to said output channel by said second pulse gating means, and means for thereafter modulating the pulses gated to said output channel by said third pulse gating means with the signals reconstructed by said reconstructor circuit.

31. In an automatic telephone system which includes a plurality of lines having individually assigned thereto different time positions in repetitive time position frames, an impulse responsive signal repeating selector provided with a gate pulse input channel, a signal pulse input channel, a busy pulse input channel and a signal pulse output channel, and including, in combination, first pulse gating means controlled by pulses transmitted to said selector over said gate pulse channel in the time position assigned to a calling one of said lines for gating pulses to said selector from said signal pulse input channel in the same time position, second pulse gating means controlled by pulses transmitted to said selector over said gate pulse channel in the time position assigned to the calling line for gating pulses to said output channel in the same time position, means responsive to the operative association of said selector with the calling line for modulating the pulses gated to said output channel by said second pulse gating means

with a dial tone signal, means for modulating the pulses gated to said selector by said first pulse gating means in accordance with signals derived from the calling line and for interrupting the flow of pulses through said first pulse gating means during a portion of each impulse transmitted over the calling line, a signal reconstructing circuit controlled by said first pulse gating means to reconstruct the signals modulated on the pulses gated by said pulse gating means, an impulse integrator circuit controlled by said reconstructor circuit to develop a control pulse in response to each interruption in pulse flow through said pulse gating means to said selector, means responsive to the first control pulse developed by said impulse integrator circuit for removing the dial tone modulation from the pulses gated to said output channel by said second pulse gating means, a pair of digit registers each including a string of gaseous discharge tubes, a pair of control pulse gate circuits for respectively repeating said control pulses to said registers, means normally blocking one of said control pulse gate circuits against repeating control pulses to its associated register, means responsive to cessation of the control pulses developed during a first impulse digit for opening said one control pulse gate circuit and for blocking the other control pulse gate circuit against repeating said control pulses to the associated register, whereby the control pulses developed during said first digit are repeated to one of said registers and the control pulses developed during a second and succeeding digit are repeated to the other of said registers, each of said registers including means for firing the tubes of the register in sequence as the control pulses are repeated thereto, pulse gating circuits individually controlled by said tubes and each operative to gate pulses when the tube controlling the circuit is fired, means for combining the pulses gated by the pulse gating circuits controlled by the last-fired tubes of said registers to form selector pulses which occur in the time position assigned to a called one of said lines, means for impressing busy pulses on said busy pulse channel in the time positions of other busy lines of the system, busy test means for comparing the time position of said selector pulses with the time positions of busy pulses fed to said selector over said busy pulse channel, thereby to determine whether the called line is idle or busy, and means controlled by said busy test means for modulating the pulses gated to said output channel by said second pulse gating means with a busy signal in the event said selector pulses occur coincidentally with busy pulses fed to said selector over said busy pulse channel.

32. In an automatic telephone system which includes a plurality of lines having individually assigned thereto different time positions in repetitive time position frames, an impulse responsive signal repeating selector provided with a gate pulse input channel, a signal pulse input channel, a busy pulse input channel and a signal pulse output channel, and including, in combination, first pulse gating means controlled by pulses transmitted to said selector over said gate pulse channel in the time position assigned to a calling one of said lines for gating pulses to said selector from said signal pulse input channel in the same time position, second pulse gating means controlled by pulses transmitted to said selector over said gate pulse channel in the time position assigned to the calling line for gating pulses to said output channel in the same time position, means responsive to the operative association of said selector with the calling line for modulating the pulses gated to said output channel by said second pulse gating means with a dial tone signal, means for modulating the pulses gated to said selector by said first pulse gating means in accordance with signals derived from the calling line and for interrupting the flow of pulses through said first pulse gating means during a portion of each impulse transmitted over the calling line, a signal reconstructing circuit controlled by said first pulse gating means to reconstruct the signals modulated on the pulses gated by said first pulse gating means, an impulse integrator circuit controlled by said reconstructor circuit to develop a control pulse in response to each interruption in pulse flow through said pulse gating means to said selector, means responsive to the first control pulse developed by said impulse integrator circuit for removing the dial tone modulation from the pulses gated to said output channel by said second pulse gating means, a pair of digit registers each including a string of gaseous discharge tubes, a pair of control pulse gate circuits for respectively repeating said control pulses to said registers, means normally blocking one of said control pulse gate circuits against repeating control pulses to its associated register, means responsive to cessation of the control pulses developed during a first impulse digit for opening said one control pulse gate circuit and for blocking the other control pulse gate circuit against repeating said control pulses to the associated register, whereby the control pulses developed during said first digit are repeated to one of said registers and the control pulses developed during a second and succeeding digit are repeated to the other of said registers, each of said registers including means for firing the tubes of the register in sequence as the control pulses are repeated thereto, pulse gating circuits individually controlled by said tubes and each operative to gate pulses when the tube controlling the circuit is fired, means for combining the pulses gated by the pulse gating circuits controlled by the last-fired tubes of said registers to form selector pulses which occur in the time position assigned to a called one of said lines, means for impressing busy pulses on said busy pulse channel in the time positions of other busy lines of the system, busy test means for comparing the time position of said selector pulses with the time positions of busy pulses fed to said selector over said busy pulse channel, thereby to determine whether the called line is idle or busy, means controlled by said busy test means for modulating the pulses gated to said output channel by said second pulse gating means with a busy signal in the event said selector pulses occur coincidentally with busy pulses fed to said selector over said busy pulse channel, means jointly controlled by said busy test means and said selector pulses for gating pulses to said output channel in the time position assigned to the called line in the event said selector pulses are not coincident with busy pulses fed to said selector over said busy pulse channel, and means for modulating the pulses gated to said output channel with the signals reconstructed by said reconstructor circuit.

33. In an automatic telephone system which includes a plurality of lines having individually assigned thereto different time positions in repetitive time position frames, an impulse responsive selector provided with a pulse input channel, a busy pulse channel and a pulse output channel, and including, in combination, first pulse gating means controlled in accordance with the identity of a calling one of said lines for gating pulses to said selector from said input channel in the time position assigned to the calling line, second pulse gating means controlled in accordance with the identity of the calling line for gating pulses from said selector to said output channel in the time position assigned to the calling line, means for modulating the pulses gated to said selector by said first pulse gating means in accordance with impulses transmitted over the calling line, means responsive to the impulse modulation of the pulses gated to said selector by said first pulse gating means for producing selector pulses in the time position assigned to a called one of said lines, means for impressing busy pulses on said busy pulse channel in the time positions of other busy lines of the system, busy test means for comparing the time position of said selector pulses with the time positions of busy pulses fed to said

selector over said busy pulse channel, and means controlled by said busy test means for modulating the pulses gated to said output channel by said second pulse gating means with a busy signal in the event said selector pulses occur coincidentally with busy pulses fed to said selector over said busy pulse channel.

34. In an automatic telephone system which includes a plurality of lines having individually assigned thereto different time positions in repetitive time position frames, an impulse responsive selector provided with a pulse input channel, a busy pulse channel and a pulse output channel, and including, in combination, first pulse gating means controlled in accordance with the identity of a calling one of said lines for gating pulses to said selector from said input channel in the time position assigned to the calling line, second pulse gating means controlled in accordance with the identity of the calling line for gating pulses from said selector to said output channel in the time position assigned to the calling line, means for modulating the pulses gated to said selector by said first pulse gating means in accordance with impulses transmitted over the calling line, means responsive to the impulse modulation of the pulses gated to said selector by said first pulse gating means for producing selector pulses in the time position assigned to a called one of said lines, means for impressing busy pulses on said busy pulse channel in the time positions of other busy lines of the system, busy test means for comparing the time position of said selector pulses with the time positions of busy pulses fed to said selector over said busy pulse channel, means controlled by said busy test means for modulating the pulses gated to said output channel by said second pulse gating means with a busy signal in the event said selector pulses occur coincidentally with busy pulses fed to said selector over said busy pulse channel, and means controlled by said busy test means for gating pulses to said busy pulse channel in the time position assigned to the called line in the event said selector pulses do not occur coincidentally with busy pulses fed to said selector over said busy pulse channel.

35. In an automatic telephone system which includes a plurality of lines having individually assigned thereto different time positions in repetitive time position frames, an impulse responsive signal repeating selector provided with a signal pulse input channel and a pulse output channel, and including, in combination, first pulse gating means controlled in accordance with the identity of a calling line for gating pulses from said signal pulse input channel to said selector in the time position assigned to the calling line, means for modulating the pulses transmitted from said input channel to said selector in accordance with each impulse transmitted over the calling line, second pulse gating means also controlled in accordance with the identity of the calling line for gating pulses to said output channel in the time position assigned to the calling line, a control tube in said selector, means for rendering said tube conductive in response to transmission of pulses through said first pulse gating means, means for modulating the pulses gated to said output channel by said second pulse gating means with a dial tone signal when said tube is rendered conductive, and means responsive to impulse modulation of the pulses transmitted to said selector from said input channel for rendering said tube non-conductive, thereby to remove the dial tone signal modulation from the pulses gated to said output channel.

36. In an automatic telephone system which includes a plurality of lines having individually assigned thereto different time positions in repetitive time position frames, an impulse responsive signal repeating selector provided with a pulse input channel and a pulse output channel, and including, in combination, first pulse gating means controlled in accordance with the identity of a calling line for gating pulses from said input channel to said selector, means for modulating the pulses gated to said selector from said input channel in accordance with each impulse transmitted over the calling line, means responsive to the impulse modulation of the pulses gated to said selector by said first pulse gating means for producing selector pulses in the time position assigned to a called one of said lines, second pulse gating means controlled by said selector pulses for gating pulses to said output channel in the time position assigned to the called line, means for modulating the pulses gated to said output channel with a ringing control signal, third pulse gating means controlled by said selector pulses to gate pulses from said input channel to said selector in the time position assigned to the called line, a ring trip control tube of the gaseous discharge type, means responsive to the pulses gated to said selector by said third pulse gating means for firing said tube, and means for removing the ringing control signal modulation from the pulses gated to said output channel by said second pulse gating means when said ring trip tube is fired.

37. In an automatic telephone system which includes a plurality of lines having individually assigned thereto different time positions in repetitive time position frames, an impulse responsive signal repeating selector provided with a pulse input channel and a pulse output channel, and including, in combination, first pulse gating means controlled in accordance with the identity of a calling line for gating pulses from said input channel to said selector, means for modulating the pulses gated to said selector from said input channel in accordance with each impulse transmitted over the calling line, second pulse gating means also controlled in accordance with the identity of the calling line for gating pulses to said output channel in the time position assigned to the calling line, means responsive to the impulse modulation of the pulses gated to said selector by said first pulse gating means for producing selector pulses in the time position assigned to a called one of said lines, third pulse gating means controlled by said selector pulses for gating pulses to said output channel in the time position assigned to the called line, means for modulating the pulses gated to said output channel by said third pulse gating means with a ringing control signal, means for concurrently modulating the pulses gated to said output channel by said second pulse gating means with a ring back tone signal, fourth pulse gating means controlled by said selector pulses to gate pulses from said input channel to said selector in the time position assigned to the called line, a ring trip control tube of the gaseous discharge type, means responsive to the pulses gated to said selector by said fourth pulse gating means for firing said tube, and means for removing the ringing control signal modulation from the pulses gated to said output channel by said third pulse gating means and for removing the ring back tone signal modulation from the pulses gated to said output channel by said second pulse gating means when said ring trip tube is fired.

38. In an automatic telephone system which includes a plurality of lines having individually assigned thereto different time positions in repetitive time position frames, an impulse responsive signal repeating selector provided with a pulse input channel and a pulse output channel, and including, in combination, first pulse gating means controlled in accordance with the identity of a calling line for gating pulses from said input channel to said selector, means for modulating the pulses gated to said selector from said input channel in accordance with each impulse transmitted over the calling line, second pulse gating means also controlled in accordance with the identity of the calling line for gating pulses to said output channel in the time position assigned to the calling line, a control tube in said selector, means for rendering said tube conductive in response to the transmission of pulses through said first pulse gating means, means responsive to operative association of said selector with the calling line for modulating the pulses gated to said output chan-

nel by said second pulse gating means with a dial tone signal when said tube is rendered conductive, means responsive to the impulse modulation of the pulses gated to said selector by said first pulse gating means for rendering said tube non-conductive, thereby to remove the dial tone signal modulation from the pulses gated to said output channel by said second pulse gating means, and for producing selector pulses in the time position assigned to a called one of said lines, third pulse gating means controlled by said selector pulses for gating pulses to said output channel in the time position assigned to the called line, means for modulating the pulses gated to said output channel by said third pulse gating means with a ringing control signal, means for concurrently modulating the pulses gated to said output channel by said second pulse gating means with a ring back tone signal, fourth pulse gating means controlled by said selector pulses to gate pulses from said input channel to said selector in the time position assigned to the called line, and means responsive to the pulses gated to said selector by said fourth pulse gating means for removing the ringing control signal modulation from the pulses gated to said output channel by said third pulse gating means and for removing the ring back tone signal modulation from the pulses gated to said output channel by said second pulse gating means.

39. In an automatic telephone system which includes a plurality of lines having individually assigned thereto different time positions in repetitive time position frames, an impulse responsive signal repeating selector provided with a pulse input channel, a busy pulse channel and a pulse output channel, and including, in combination, first pulse gating means controlled in accordance wtih the identity of a calling one of said lines for gating pulses to said selector from said pulse input channel in the time position assigned to the calling line, means for modulating the pulses gated to said selector by said pulse gating means in accordance with impulses transmitted over the calling line, second pulse gating means also controlled in accordance with the identity of the calling line for gating pulses to said output channel in the time position assigned to the calling line, a control tube in said selector of the gaseous discharge type, means for firing said tube in response to transmission of pulses through said first pulse gating means, means for modulating the pulses gated to said output channel by said second pulse gating means with a dial tone signal when said control tube is fired, means responsive to the impulse modulation of the pulses gated to said selector by said first pulse gating means for extinguishing said control tube, thereby to remove the dial tone signal modulation from the pulses gated to said output channel by said second pulse gating means, and for producing selector pulses in the time position assigned to a called one of said lines, means for impressing busy pulses on said busy pulse channel in the time positions of other busy lines of the system, busy test means for comparing the time position of said selector pulses with the time positions of busy pulses fed to said selector over said busy pulse channel, thereby to determine whether the called line is busy or idle, means controlled by said busy test means for modulating the pulses gated to said output channel, by said second pulse gating means with a busy signal in the event said selector pulses occur coincidentally with busy pulses fed to said selector over said busy pulse channel, third pulse gating means jointly controlled by said selector pulses and said busy test means for gating pulses to said output channel in the time position assigned to the calling line in the event said selector pulses do not occur coincidentally with busy pulses fed to said selector over said busy pulse channel, means for modulating the pulses gated to said output channel by said third pulse gating means with a ringing control signal, means for concurrently modulating the pulses gated to said output channel by said second pulse gating means with a ring back tone signal, fourth pulse gating means jointly controlled by said busy test means and said selector pulses for gating pulses to said selector from said input channel in the event said selector pulses do not occur coincidentally with busy pulses fed to said selector over said busy pulse channel, a ring trip control tube of the gaseous discharge type, means responsive to the pulses gated to said selector by said fourth pulse gating means for firing said tube, and means for removing the ringing control signal modulation from the pulses gated to said output channel by said third pulse gating means and for removing the ring back tone signal modulation from the pulses gated to said output channel by said second pulse gating means in response to firing of said ring trip control tube.

40. In an automatic telephone system, a plurality of lines having individually assigned thereto different time positions in repetitive time position frames, a selector provided with a finder gate pulse input channel, a signal bearing pulse input channel and a pulse output channel, means for impressing relatively wide finder gate pulses on said finder gate pulse input channel in the time position assigned to a calling one of said lines, means controlled by said finder gate pulses for gating relatively narrow signal bearing pulses which are overlapped by said finder gate pulses and are transmitted to said selector over said signal bearing pulse input channel in the same time position, and means included in said selector and controlled by the pulses gated by said pulse gating means for gating pulses to said pulse output channel in a different time position.

41. In an automatic telephone system, a plurality of lines having individually assigned thereto different time positions in repetitive time position frames, a selector provided with a finder gate pulse input channel, a signal bearing pulse input channel and a pulse output channel, means for impressing relatively wide finder gate pulses on said finder gate pulse input channel in the time position assigned to a calling one of said lines, means for impressing relatively narrow signal bearing pulses on said signal bearing pulse input channel in the time positions assigned to all calling ones of said lines, pulse gating means controlled by said finder gate pulses for admitting signal bearing pulses to said selector in the same time position, and means included in said selector and controlled by the pulses gated by said pulse gating means for gating pulses to said pulse output channel in a different time position.

42. In an automatic telephone system, a plurality of lines having individually assigned thereto different time positions in repetitive time position frames, a selector provided with a finder gate pulse input channel, a signal bearing pulse input channel and a pulse output channel, means for impressing relatively wide finder gate pulses on said finder gate pulse input channel in the time position assigned to a calling one of said lines, means controlled by said finder gate pulses for gating relatively narrow signal bearing pulses transmitted to said selector over said signal bearing pulse input channel in the same time position, means included in said selector and controlled by the pulses gated by said pulse gating means for developing relatively wide gating pulses in a different time position, and means controlled by the gating pulses developed by said last-named means for gating relatively narrow signal bearing pulses which are completely overlapped by said developed pulses to said output channel in the same time position.

43. In an automatic telephone system, a plurality of lines having individually assigned thereto different time positions in repetitive time position frames, a selector provided with a pair of pulse input channels and a pulse output channel and including pulse gating means controlled in accordance with the identity of a calling one of said lines for gating pulses to said selector from one of said pulse input channels in the time position assigned to the calling line, means included in said selector and

controlled by the pulses gated by said pulse gating means for developing selector pulses in a different time position, and means controlled by said selector pulses for gating pulses from the other of said pulse input channels to said pulse output channel in the same time position.

44. In an automatic telephone system, a plurality of lines having individually assigned thereto different time positions in repetitive time position frames, a selector provided with a pair of pulse input channels and a pulse output channel and including pulse gating means controlled in accordance with the identity of a calling one of said lines for gating pulses to said selector from one of said pulse input channels in the time position assigned to the calling line, means included in said selector and controlled by the pulses gated by said pulse gating means for developing selector pulses in a different time position, means controlled by said selector pulses for gating pulses from the other of said pulse input channels to said pulse output channel in the same time position, and means included in said selector and controlled by the pulses gated by said pulse gating means for gating pulses from the other of said pulse input channels to said pulse output channel in the time position assigned to the calling line.

45. In an automatic telephone system, a plurality of lines having individually assigned thereto different time positions in repetitive time position frames, a selector provided with a finder gate pulse channel, a pair of pulse input channels and a pulse output channel, means for impressing relatively wide finder gate pulses on said finder gate pulse channel in the time position assigned to a calling one of said lines, means controlled by said finder gate pulses for gating relatively narrow signal bearing pulses transmitted to said selector over one of said pair of pulse input channels in the same time position, means included in said selector and controlled by the pulses gated by said pulse gating means for developing relatively wide selector pulses in a different time position, and means controlled by said selector pulses for gating to said pulse output channel pulses transmitted to said selector over the other of said pulse input channels in the same time position.

46. In an automatic telephone system, a plurality of lines having individually assigned thereto different time positions in repetitive time position frames, a selector provided with a pair of pulse input channels and a pulse output channel and including pulse gating means controlled in accordance with the identity of a calling one of said lines for gating pulses to said selector from one of said pulse input channels in the time position assigned to the calling line, means included in said selector and controlled by the pulses gated by said pulse gating means for developing selector pulses in a different time position, means for impressing upon the other of said channels pulses appearing in each of said time positions, and means controlled by said selector pulses for gating pulses from the other of said pulse input channels to said pulse output channel in the same time position.

47. In an automatic telephone system, a plurality of lines having individually assigned thereto different time positions in repetitive time position frames, a selector provided with a pair of pulses input channels and a pulse output channel and including pulse gating means controlled in accordance with the identity of a calling one of said lines for gating pulses to said selector from one of said pulse input channels in the time position assigned to the calling line, means included in said selector and controlled by the pulses gated by said pulse gating means for developing relatively wide selector pulses in a different time position, means for impressing upon the other of said channels relatively narrow pulses appearing in each of said time positions, and means controlled by said selector pulses for gating pulses from the other of said pulse input channels to said pulse output channel in the same time position.

48. In an automatic telephone system which includes a plurality of lines having individually assigned thereto different time positions in repetitive time position frames, an impulse responsive selector provided with a signal pulse input channel and a signal pulse output channel and including pulse gating means controlled in accordance with the identity of a calling one of said lines for gating pulses to said selector from said pulse input channel in the time position assigned to the calling line, the pulses gated through said pulse gating means being modulated by switch directing impulses transmitted over the calling line, an impulse integrator circuit for developing control pulses in response to said switch directing impulse modulation, impulse register means including a primer stage and a plurality of counting stages, means for rendering said primer stage conductive in response to operative association of said selector with the calling line, means responsive to said control pulses for rendering said primer stage non-conductive and for successively rendering said counting stages conductive at the rate of one stage for each control pulse, and means controlled by said primer stage for transmitting dial tone modulated pulses to said signal pulse output channel in the time position assigned to the calling line during the period from operative association of said selector with the calling line until the first switch directing impulse is transmitted over the calling line.

49. In an automatic telephone system which includes a plurality of lines having individually assigned thereto different time positions in repetitive time position frames, an impulse responsive selector provided with a signal pulse input channel and a signal pulse output channel and including pulse gating means controlled in accordance with the identity of a calling one of said lines for gating pulses to said selector from said pulse input channel in the time position assigned to the calling line, the pulses gated through said pulse gating means being modulated by switch directing impulses transmitted over the calling line, an impulse integrator circuit for developing control pulses in response to said switch directing impulse modulation, impulse register means including a primer stage and a plurality of counting stages, means responsive to operative association of said selector with the calling line for rendering said primer stage conductive and for transmitting dial tone modulated pulses to said signal pulse output channel in the time position assigned to the calling line, means responsive to said control pulses for rendering said primer stage non-conductive and for successively rendering said counting stages conductive at the rate of one stage for each control pulse, and means controlled by said primer stage for removing said dial tone modulation from said pulses transmitted to said output channel.

50. In combination, a selector device having a plurality of input terminals, an output terminal and selector means for selectively connecting the input terminals to said output terminal, means to apply pulse trains of different phases to said input terminals respectively, a control circuit to actuate said selector means, a source of control voltage connected to said control circuit to cause said selector means to select one of said input terminals for connection to said output terminal, a pulse demodulator, a pulse modulator and means to connect said output terminal to said demodulator and modulator.

51. In combination, a selector device having a plurality of input terminals, an output terminal and selector means for selectively connecting the input terminals to said output terminal, means to apply pulse trains having different channel identifying signals to said input terminals respectively, a control circuit to actuate said selector means, a source of control voltage connected to said control circuit to cause said selector means to select one of said input terminals for connection to said output terminal, a pulse demodulator, a pulse modulator and

means to connect said output terminal to said demodulator and modulator.

52. In combination, a selector device having a plurality of input terminals, an output terminal and selector means for selectively connecting the input terminals to said output terminal, means to apply pulse trains of different phases to said input terminals respectively, a control circuit to actuate said selector means, a source of control signals connected to said control circuit to cause said selector means to select one of said input terminals for connection to said output terminal, a pulse demodulator, a pulse modulator, and means to connect said output terminal to said demodulator and modulator.

53. Coding apparatus for automatic exchanges, comprising a main input terminal to receive dialing impulses, a plurality of selector switching devices each having a plurality of input terminals and an output terminal, control apparatus to actuate said selector switching devices in response to dialing impulses, means to apply dialing impulses from said main input terminal to said control apparatus to select different ones of the said input terminals of said selector switching devices for connection to said output terminals thereof respectively, a source of voltages of different characteristics, means to apply said voltages to the input terminals of said selector switching devices, different voltages being applied to different ones of the last said terminals, a combining circuit connecting the output terminals of said selector switching devices to provide a combined output from said selector switching devices, a source of signalling voltage, a further combining circuit, a main output terminal, means connecting said further combining circuit between the first said combining circuit and said main output terminal, and means to apply signal voltage from the last said source to said further combining circuit to produce at said main output terminal a signal having characteristics related to said dialing impulses and to a signal from the last said source.

References Cited in the file of this patent

UNITED STATES PATENTS

2,490,833	Ransom	Dec. 13, 1949
2,492,136	Deloraine	Dec. 27, 1949
2,619,548	Lesti	Nov. 25, 1952
2,666,809	Flowers	Jan. 19, 1954
2,716,159	Flowers	Aug. 23, 1955
2,770,678	Flowers	Nov. 13, 1956

UNITED STATES PATENT OFFICE

CERTIFICATE OF CORRECTION

Patent No. 2,934,606 April 26, 1960

Robert B. Trousdale

It is hereby certified that error appears in the printed specification of the above numbered patent requiring correction and that the said Letters Patent should read as corrected below.

Column 96, line 63, for "2023" read -- 1023 --; column 119, line 55, for "which" read -- when --; column 122, line 71, for "contnrolled" read -- controlled --; column 128, line 41, for "idler" read -- idle --; column 132, line 9, for "registers" read -- register --; column 141, line 62, for "pulses" read -- pulse --.

Signed and sealed this 20th day of September 1960.

(SEAL)
Attest:
KARL H. AXLINE
Attesting Officer

ROBERT C. WATSON
Commissioner of Patents