April 11, 1967 H. A. SAUER 3,314,003

HOUSING AND ADJUSTMENTS FOR AN ELECTRICAL STANDARD NETWORK

Filed Sept. 24, 1964 9 Sheets-Sheet 1

FIG. 1

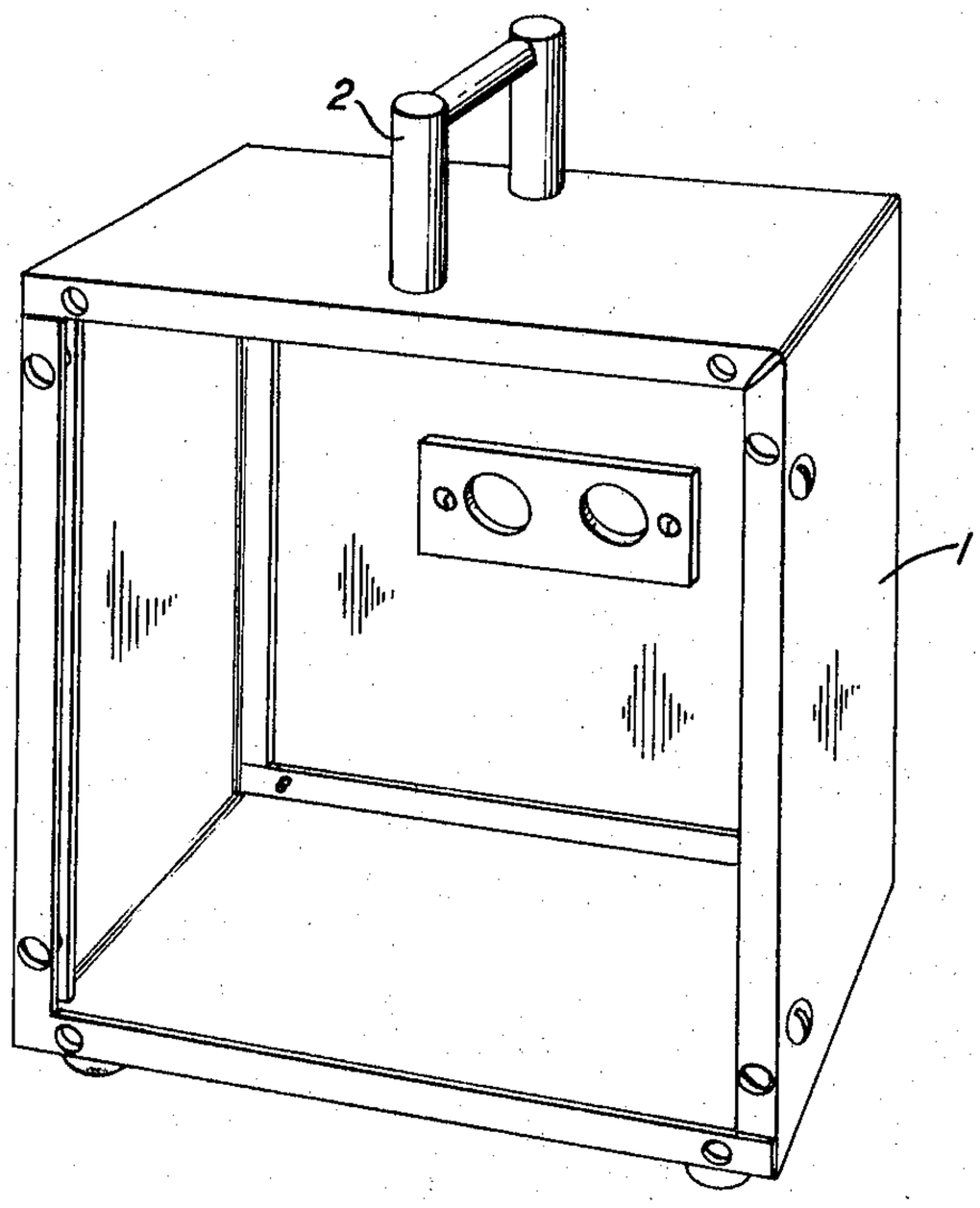

FIG. 2

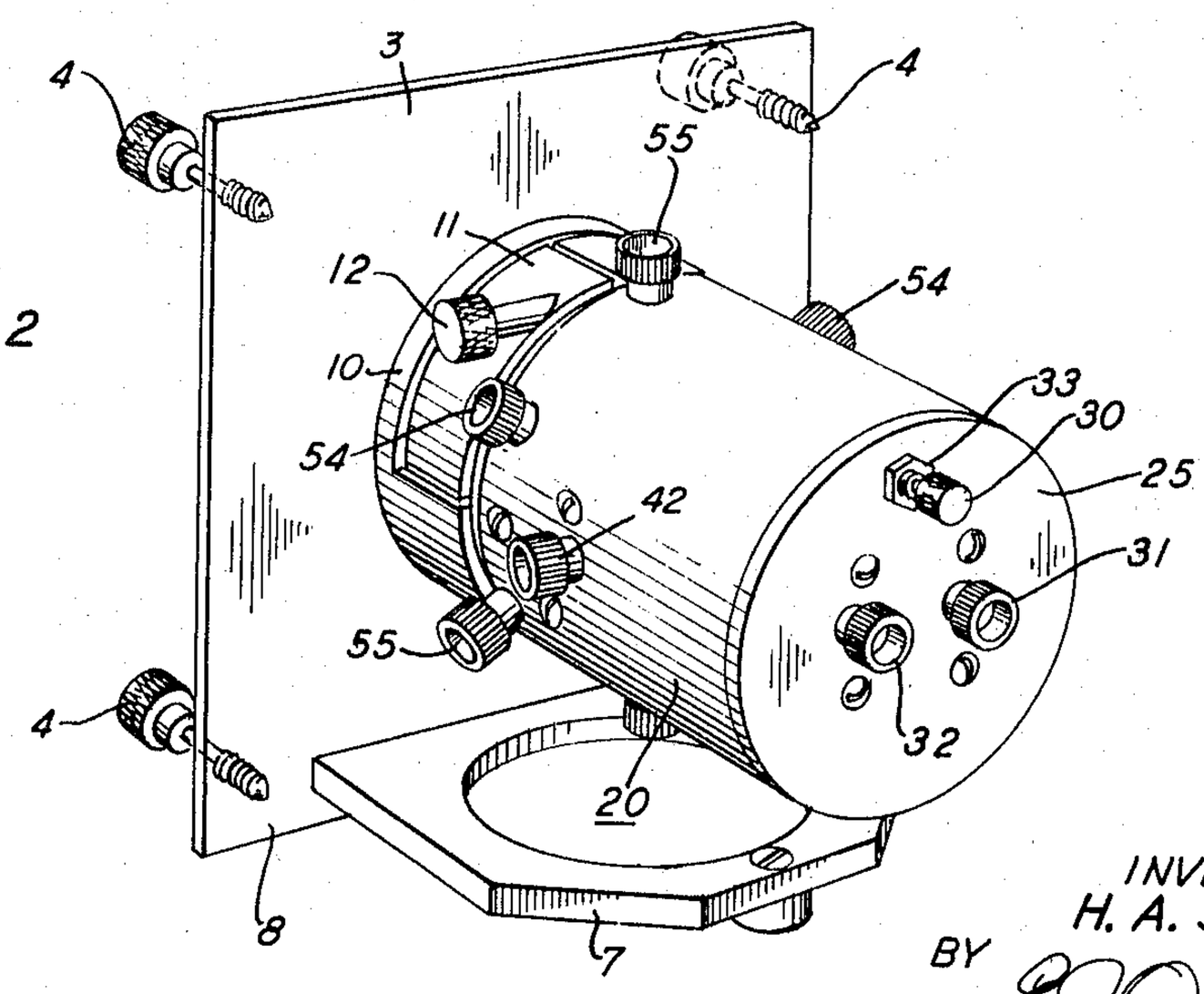

INVENTOR
H. A. SAUER
BY E. J. Olivier
ATTORNEY

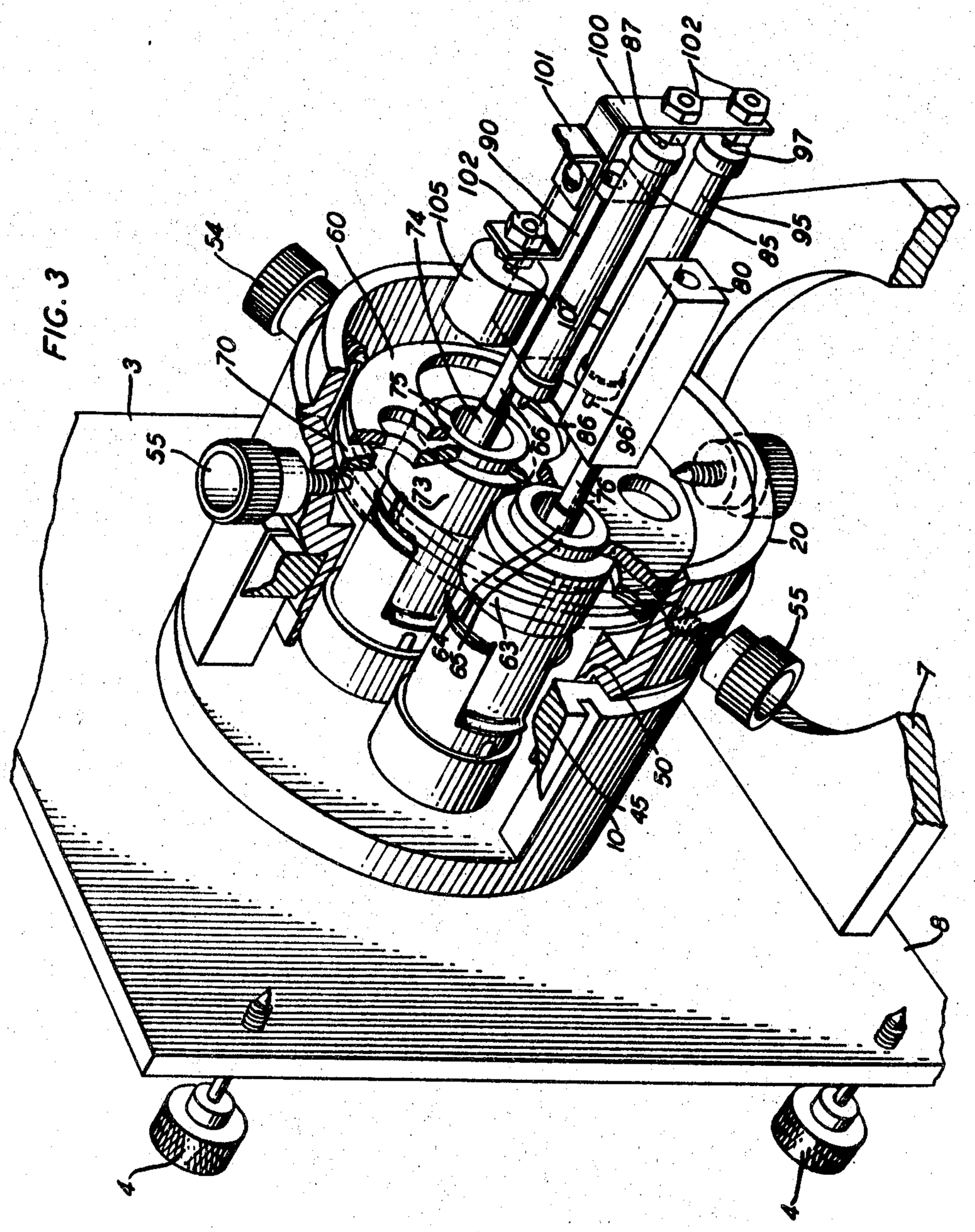
FIG. 3
3
54
60
70
74
105
102
90
101
100
87
102
97
95
85
80
55
75
66
86
96
73
76
20
55
64
68
63
50
45
10
7
8
4
4

FIG. 4

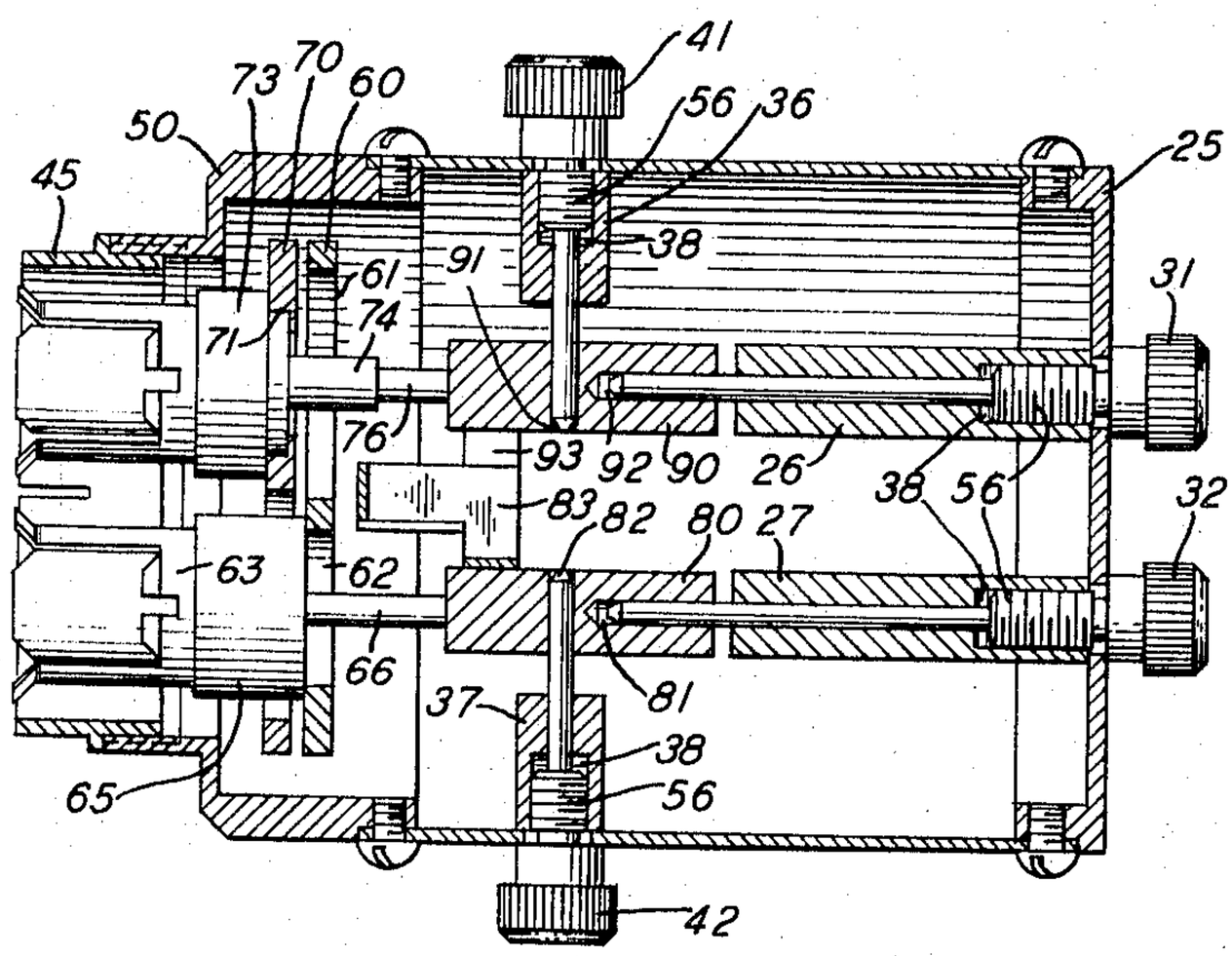
41
73
70
60
56
36
50
25
45
38
61
91
31
71
74
76
93
92
90
26
38
56
32
83
82
80
27
63
62
66
37
81
38
65
56
42

FIG. 5

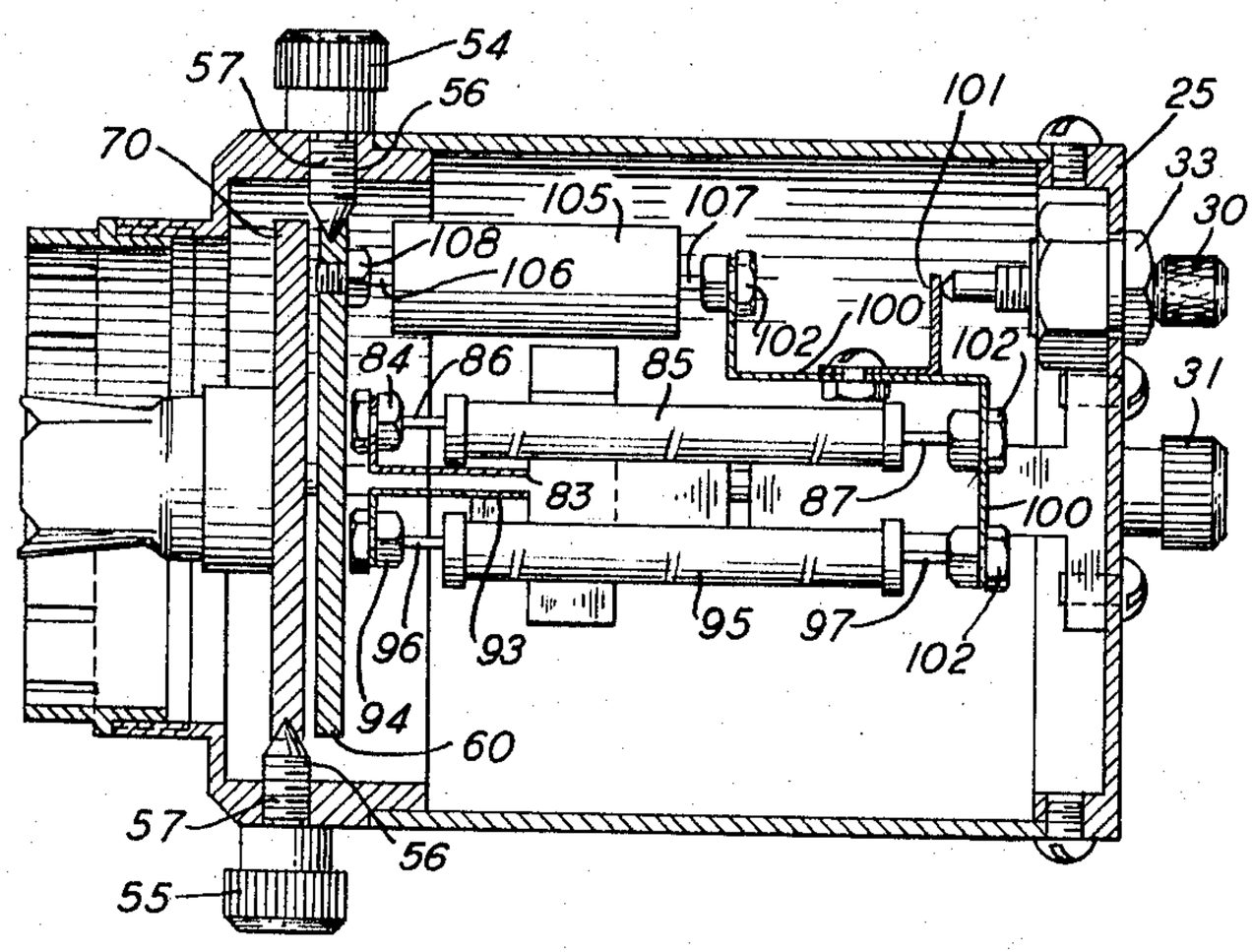
54
57
56
101
25
70
33
105
107
30
108
106
100
102
102
84
86
85
31
83
87
100
96
93
95
97
102
94
60
57
56
55

FIG. 6

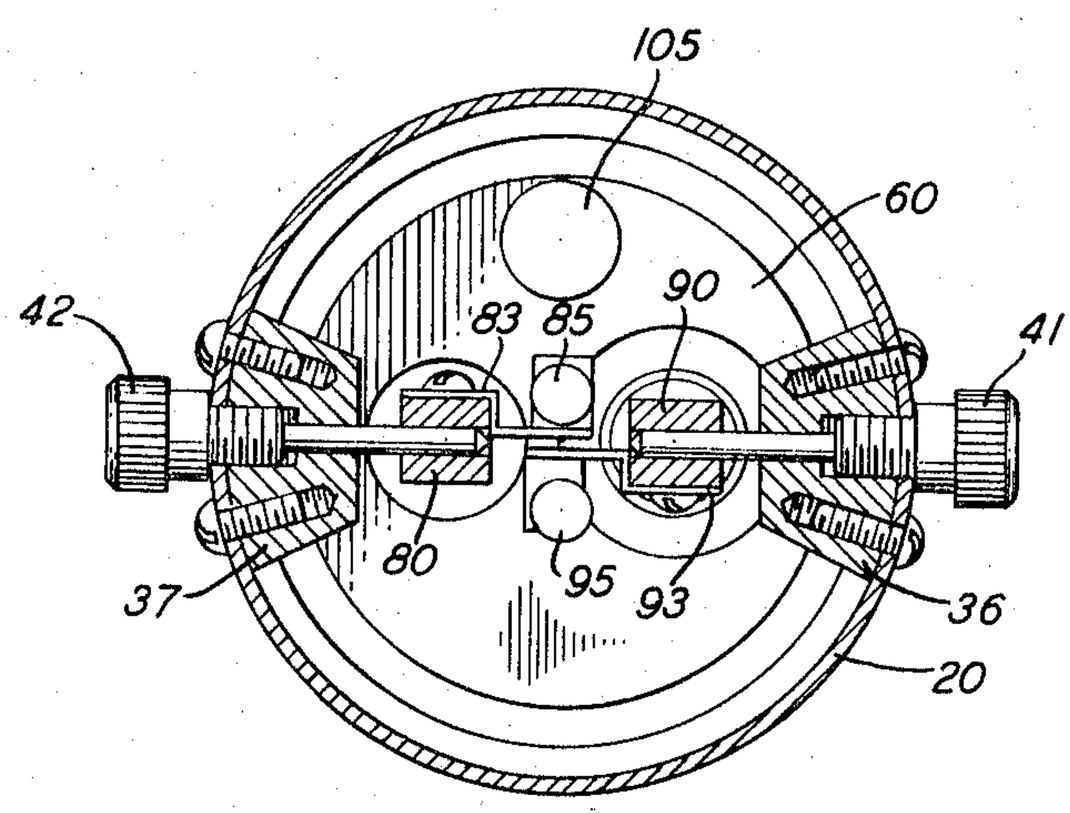

FIG. 7

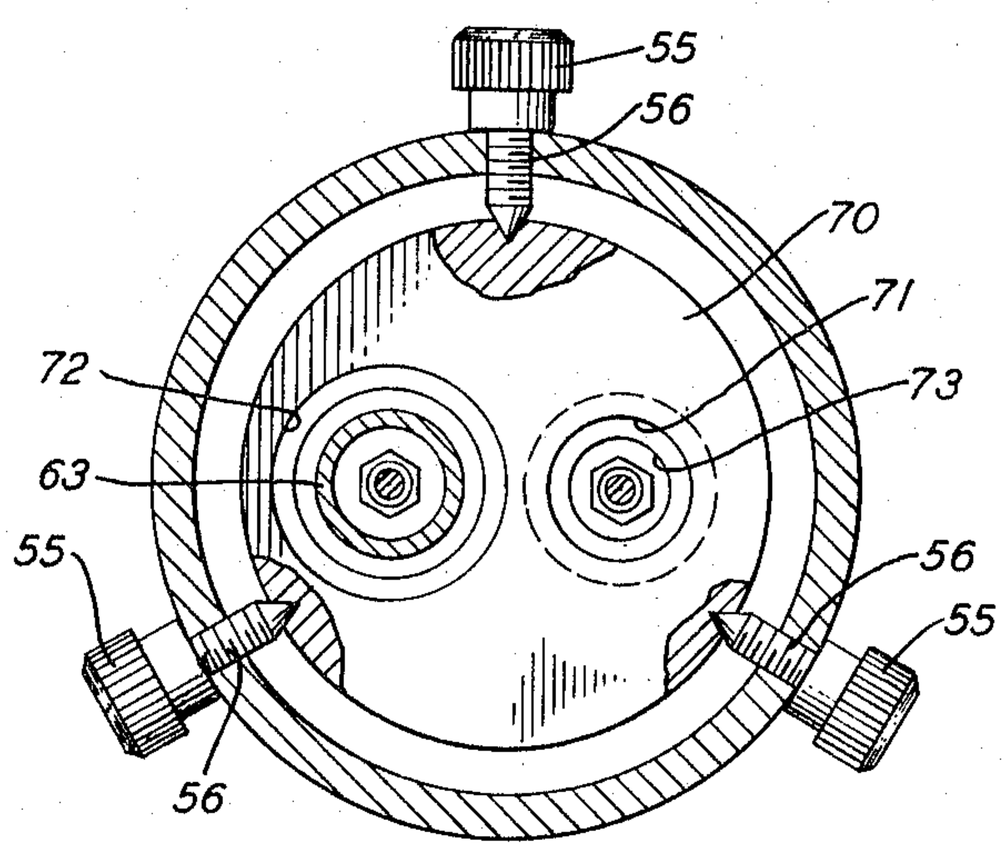

FIG. 8

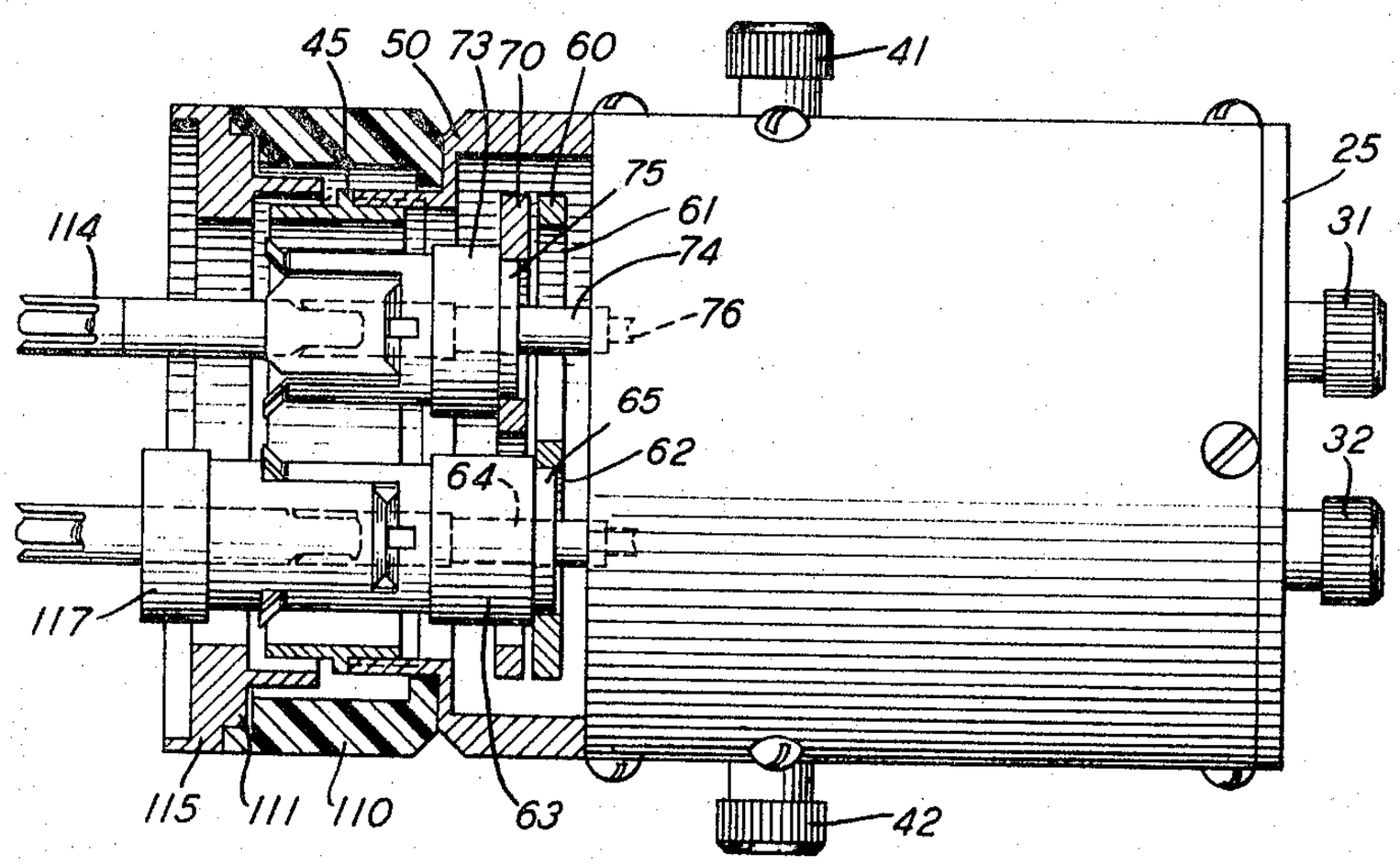
45
50
73
70
60
41
25
31
32
75
61
74
76
114
65
62
64
117
115
111
110
63
42

FIG. 9

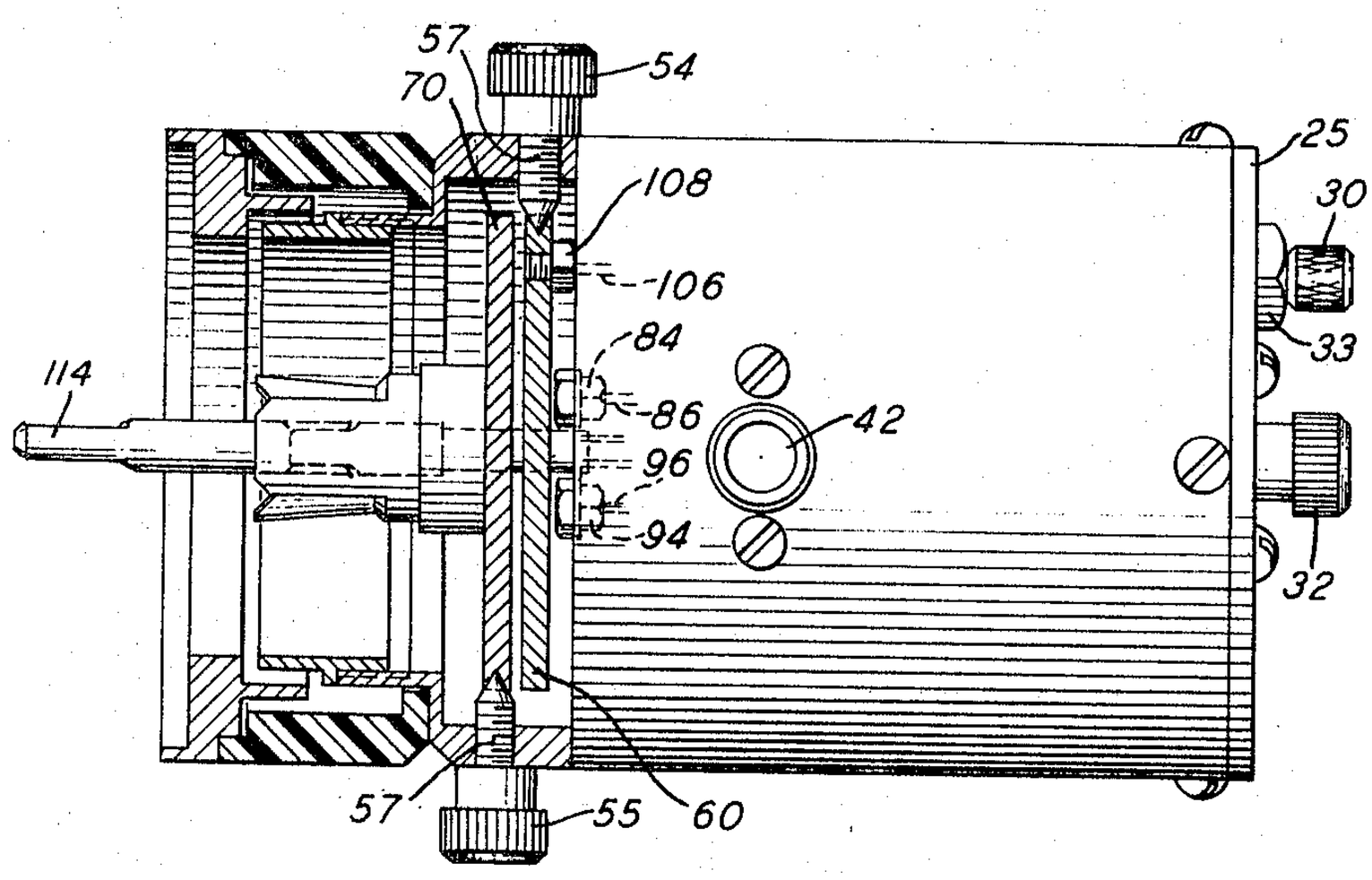
57
70
54
25
30
33
108
106
84
114
86
42
96
94
32
57
55
60

HOUSING AND ADJUSTMENTS FOR AN ELECTRICAL STANDARD NETWORK

Filed Sept. 24, 1964 9 Sheets-Sheet 6

FIG. 10

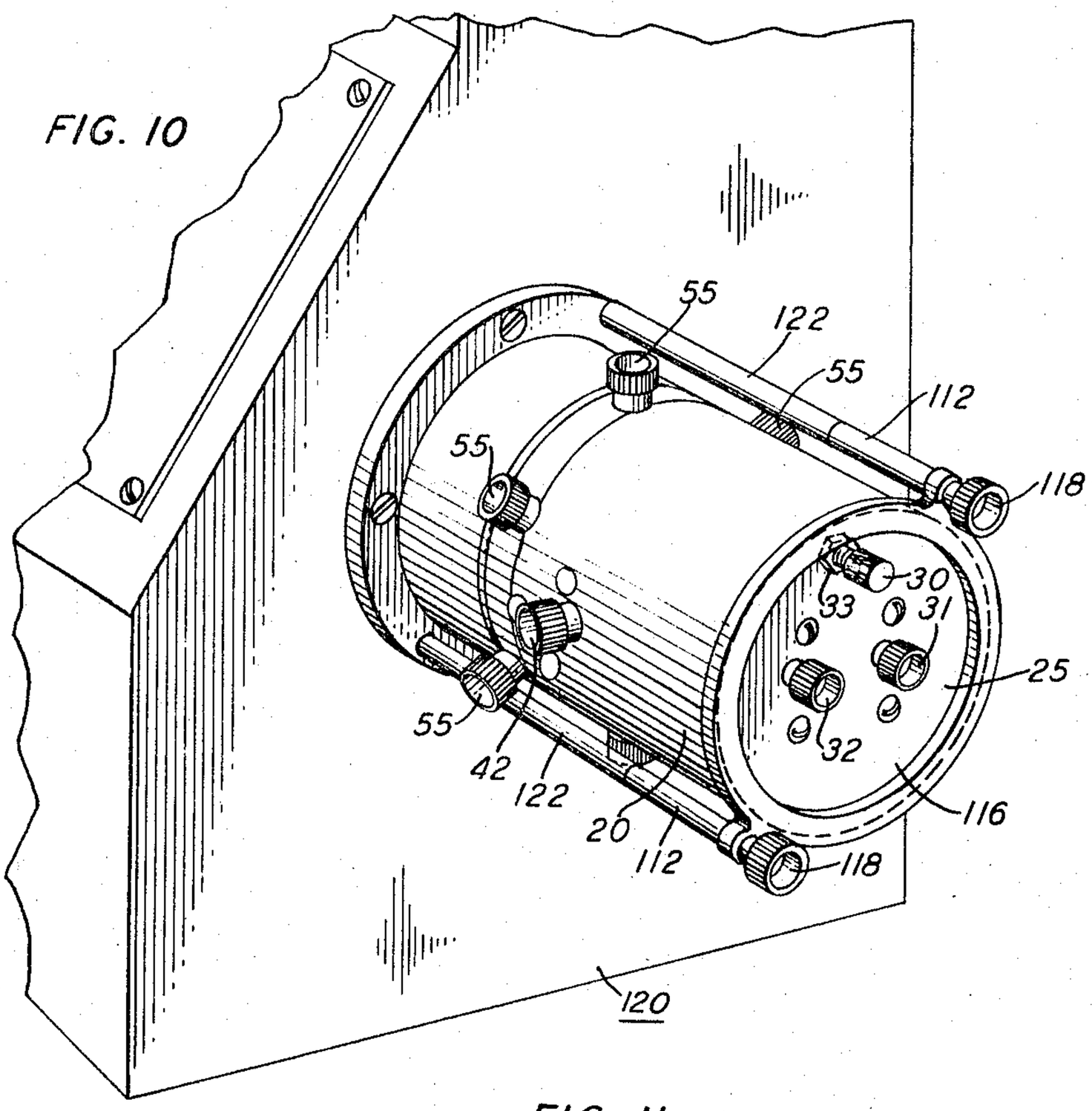

FIG. 11

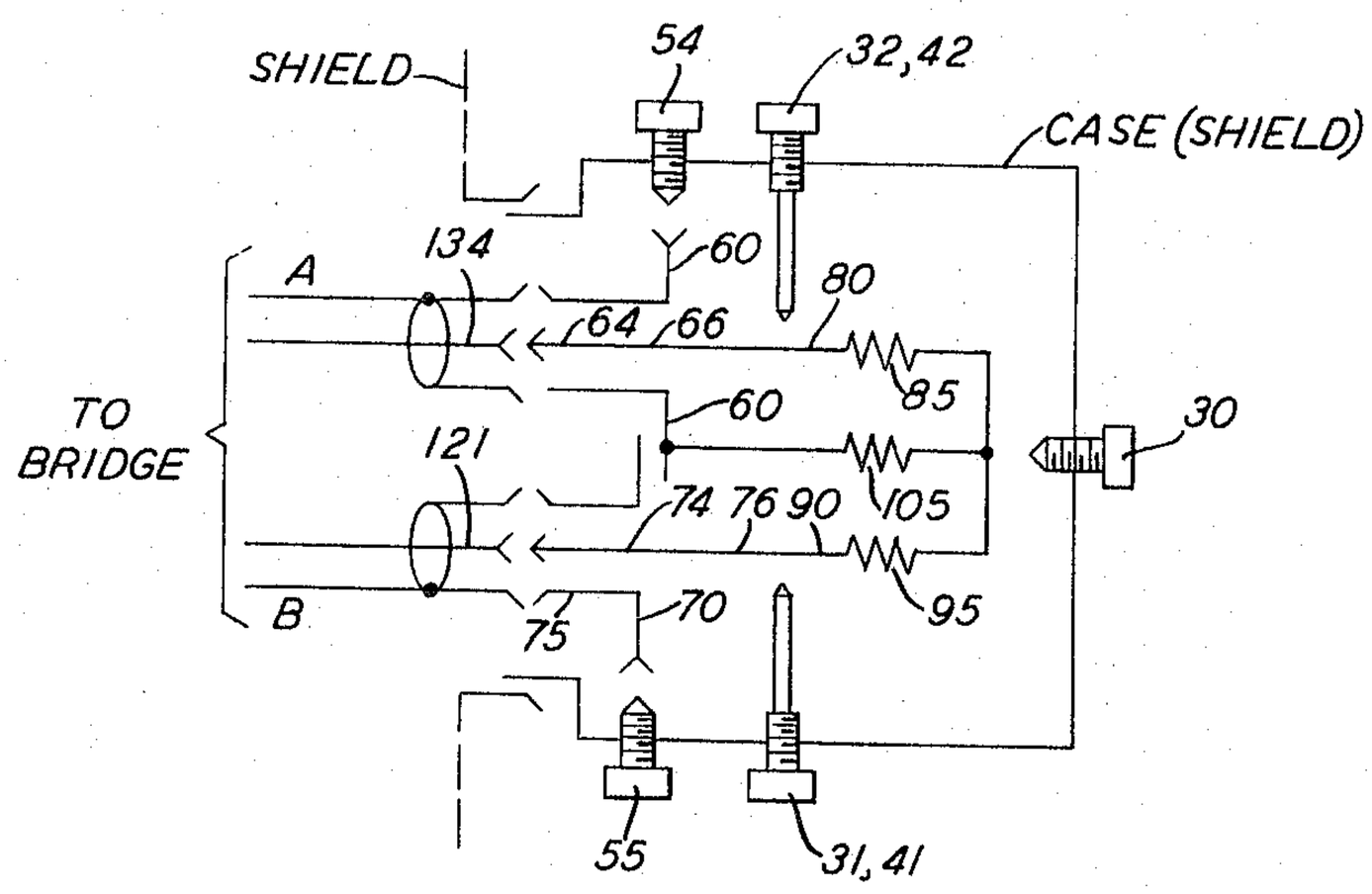

HOUSING AND ADJUSTMENTS FOR AN ELECTRICAL STANDARD NETWORK

Filed Sept. 24, 1964 9 Sheets-Sheet 7

FIG. 12

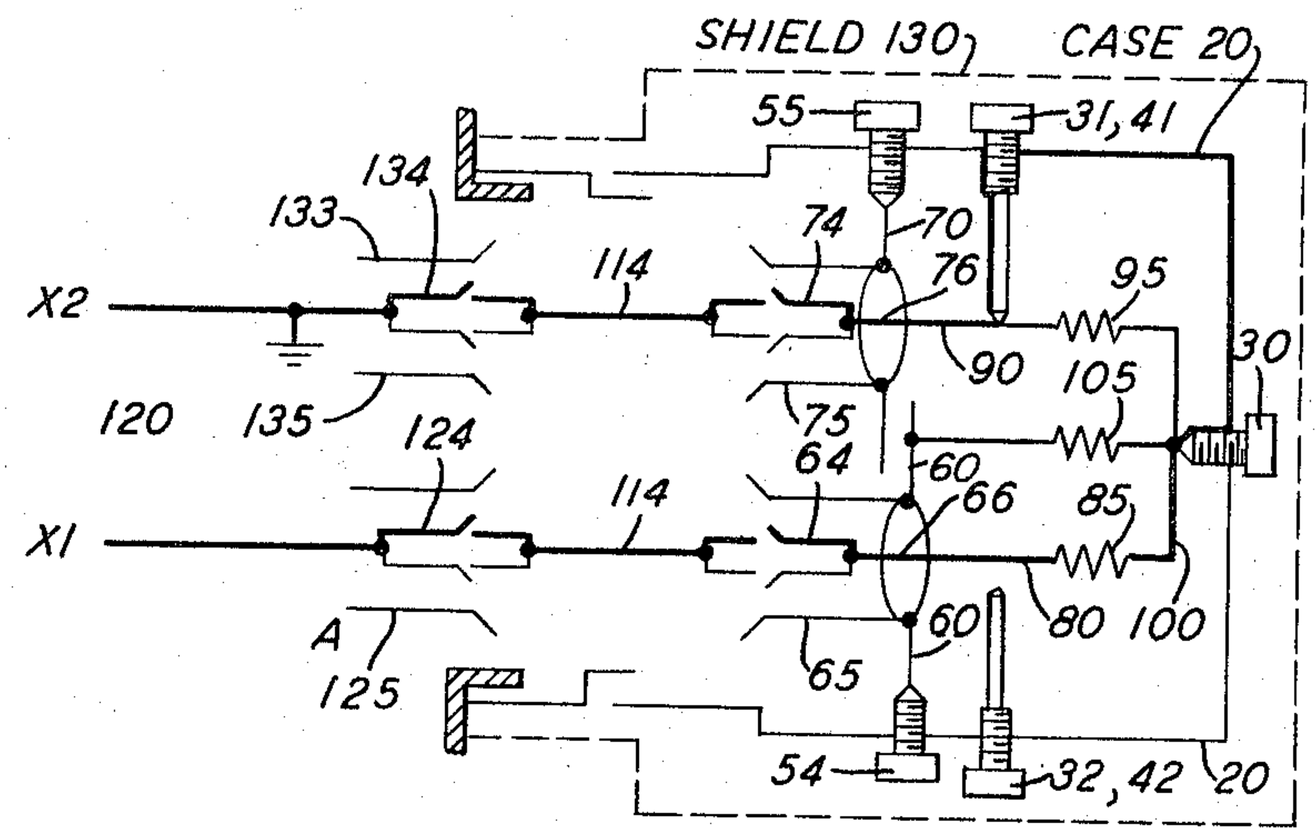

FIG. 13

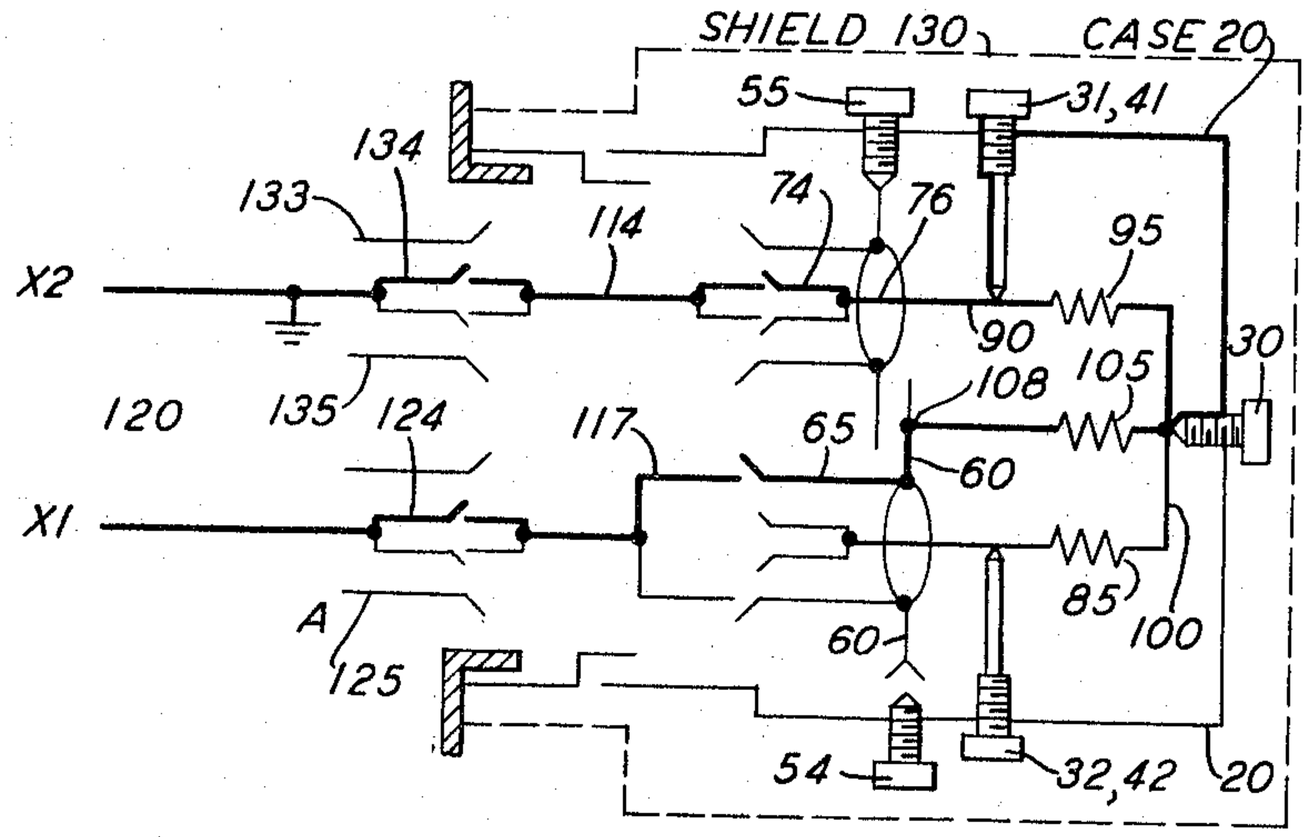

FIG. 14

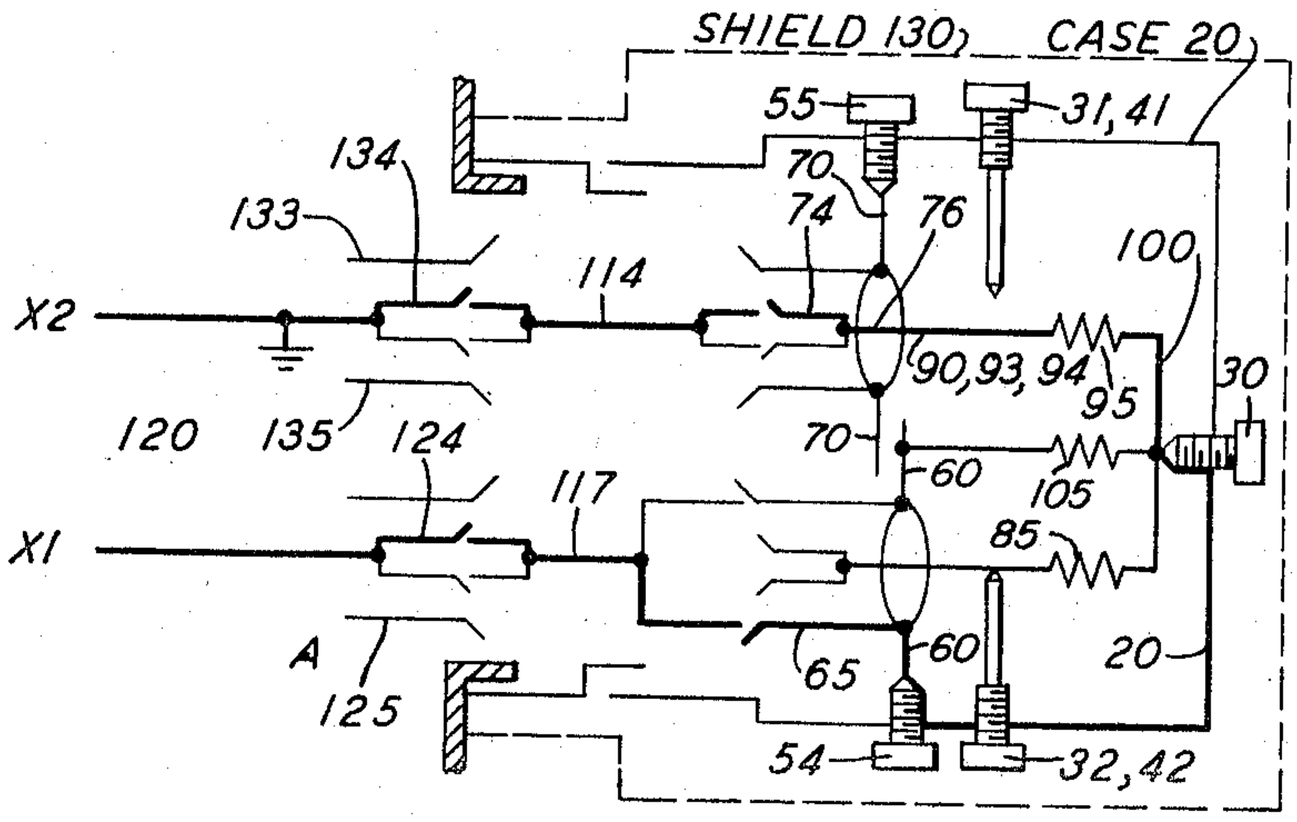

FIG. 16

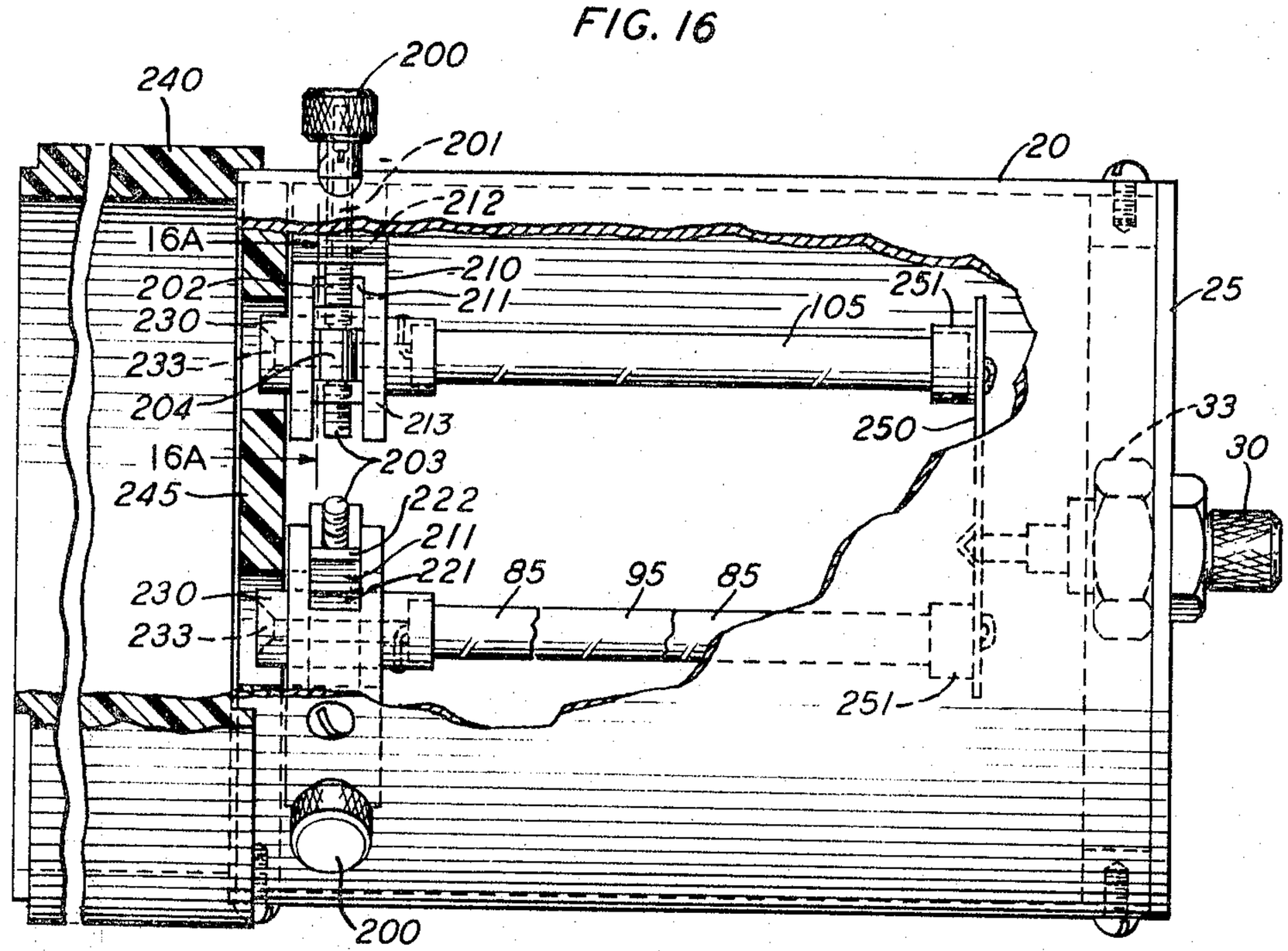

FIG. 16A

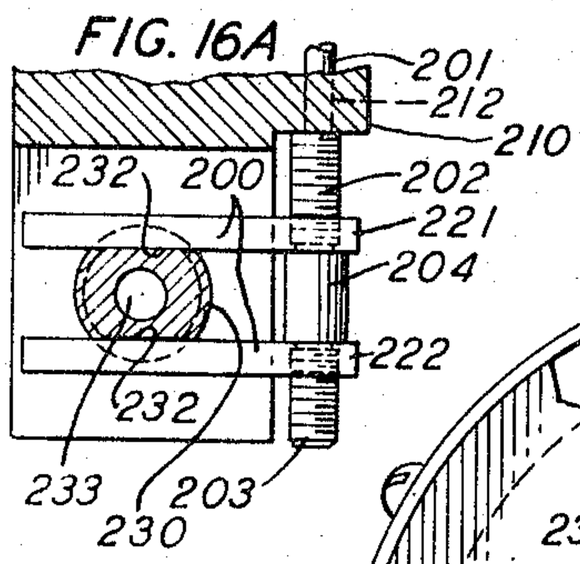

FIG. 17

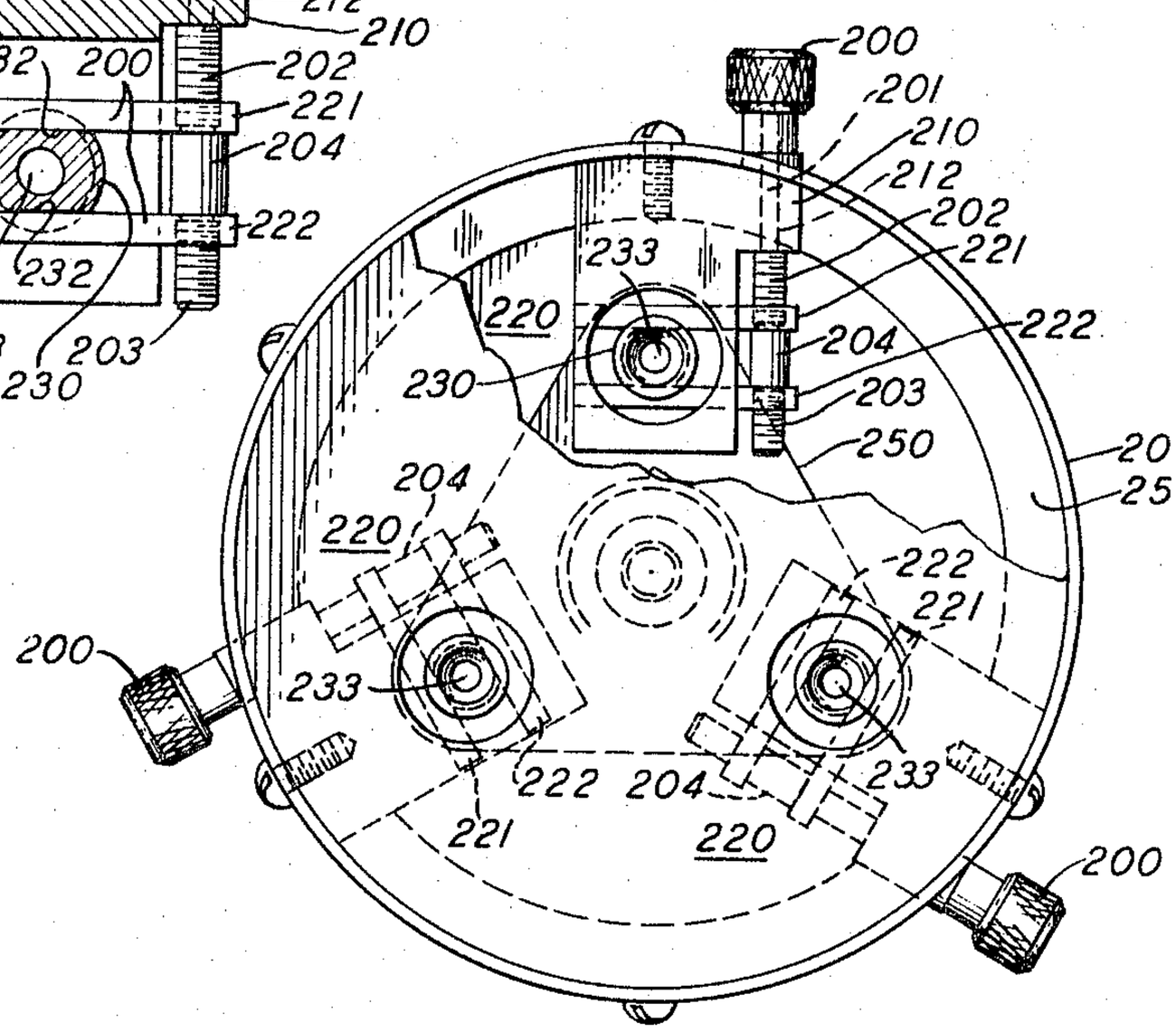

FIG. 15

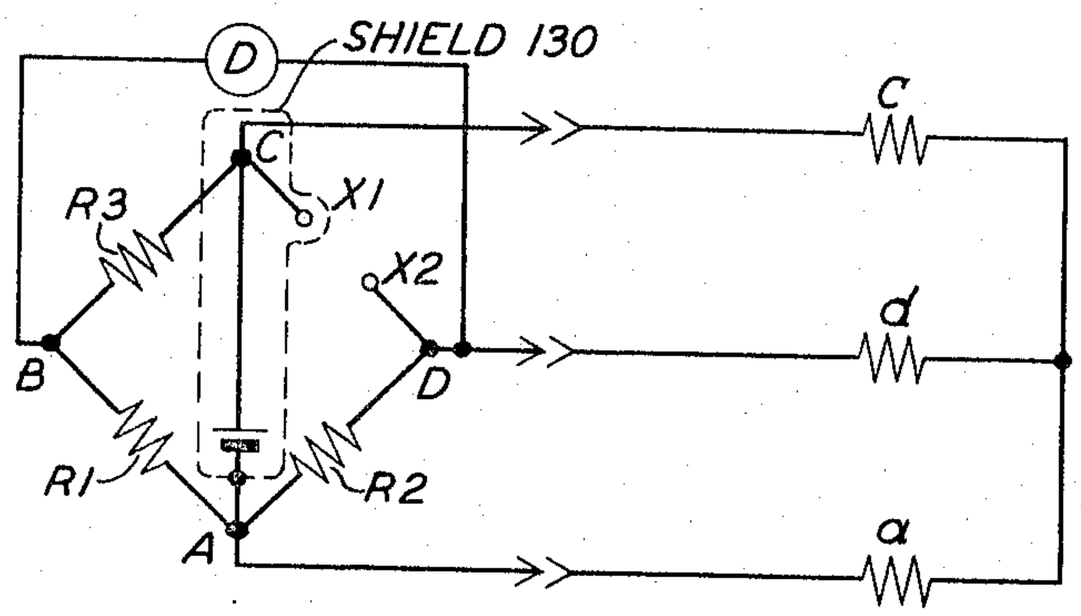

FIG. 18

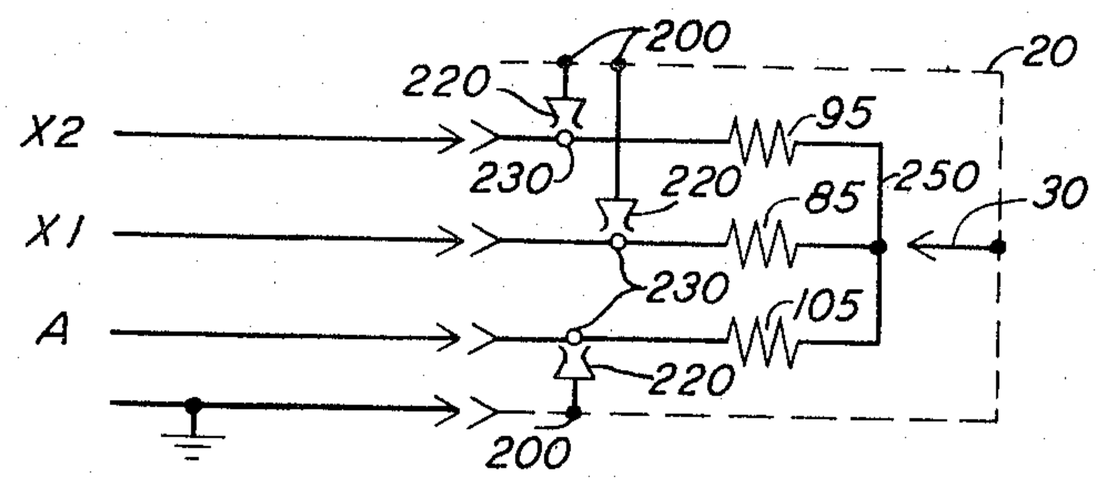

FIG. 19

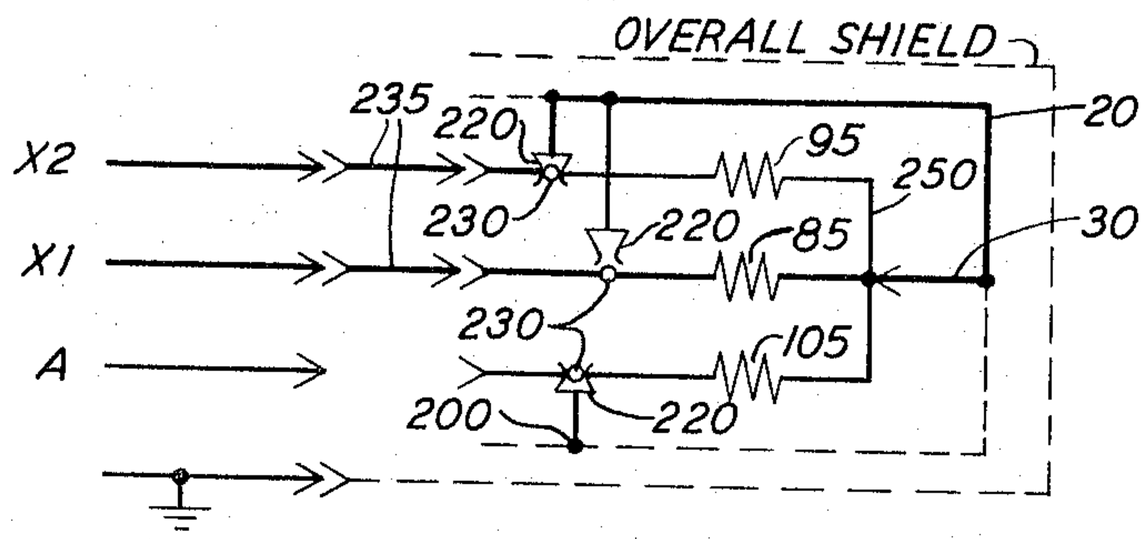

FIG. 20

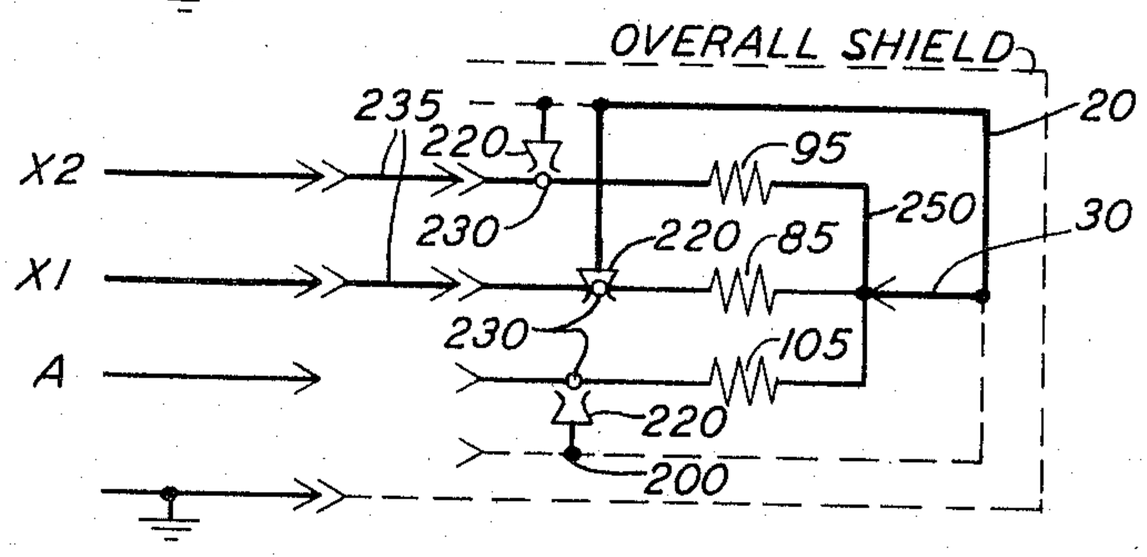

FIG. 21

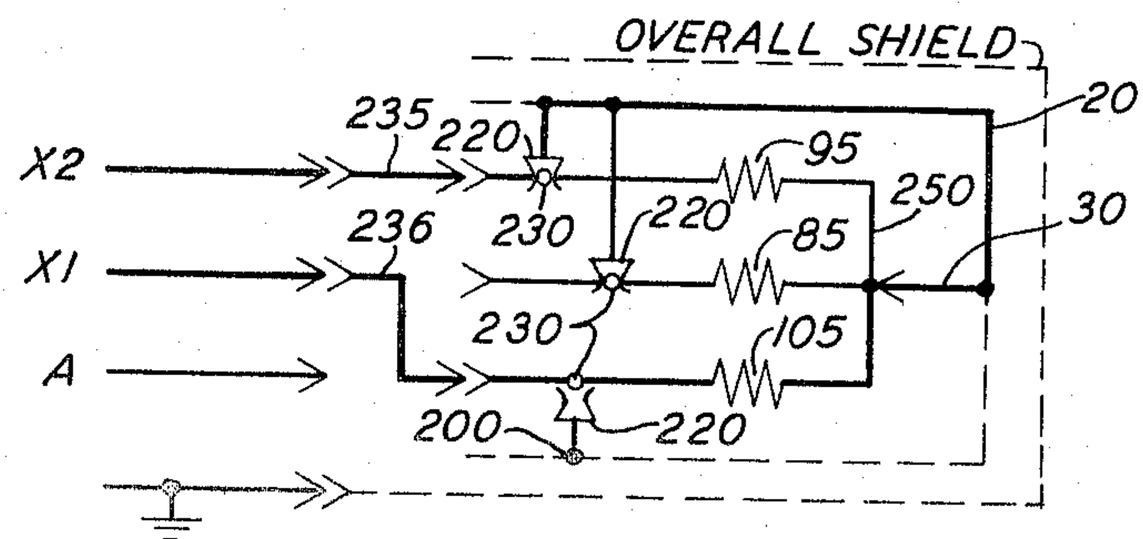

United States Patent Office

3,314,003

Patented Apr. 11, 1967

1

3,314,003
HOUSING AND ADJUSTMENTS FOR AN ELECTRICAL STANDARD NETWORK

Harold A. Sauer, Hatboro, Pa., assignor to Bell Telephone Laboratories, Incorporated, New York, N.Y., a corporation of New York

Filed Sept. 24, 1964, Ser. No. 398,908
11 Claims. (Cl. 323—75)

This invention relates to apparatus for calibrating D.-C. resistance and conductance bridges. More specifically, it pertains to apparatus for housing and manipulating the calibration network.

In recent years, uses for materials of very high resistivity have expanded, bringing a concomitant need for highly accurate and precise measuring bridges and for resistance standards to calibrate these bridges. The usual method of calibrating has been to connect a standard having a component, or several series-connected components, of known certified resistance value, and compare this value with the bridge scale readout. Such a method has been satisfactory in the past for calibrating bridges in a range up to about 10^7 ohms. Individual components with resistances of this order of magnitude can be measured precisely and calibrated by well-known methods employed at the National Bureau of Standards, for example. At this time the Bureau of Standards will calibrate the resistance values of individual resistors with the values extending to the multimegohm range. However, individual resistors of convenient size higher than about 10^{10} ohms are unstable and therefore unreliable as components in a standard.

To calibrate resistance bridges having these higher upper ranges, it is of course possible to construct a standard using a great multitude of series-connected resistors having known lower values. The higher the upper range, however, the more impracticable this method becomes; and at ranges of 10^{14} through 10^{16} ohms the method is unworkable.

A viable alternative exists, however, in the employment as a standard of a known Y network having only three resistors which operates as a resistance multiplier. The principle of this network is stated, for example, in an article "The Equivalence of Triangles and Three-Pointed Stars in Conducting Networks," A. E. Kennelly, Electrical World, New York, New York, volume 34, 1899, pp. 413–414. The manner in which such a Y network may be connected to a resistance bridge, for example, is shown in "A D.-C. Wheatsone Bridge for Multiterohm Measurements With High Accuracy Capability," by H. A. Sauer and W. H. Shirk, Jr., Communication and Electronics, March 1964. As shown therein, the Y network is connected to the bridge through its *a*, *c* and *d* terminals. The network functions in such a manner that with properly chosen relatively low resistances, it will provide in its delta transformation a simulated resistance across the X_1–X_2 bridge terminals that is orders of magnitude higher than any one resistance component of the network.

The primary and working standards that embody this network principle must be adaptable on a broad basis to a system of interest and benefit to precision electrical groups and organizations, with an objective of the eventual establishment of very high resistance standards and their calibration by the National Bureau of Standards.

The achievement of this purpose involves several special problems concerning the Y network and its housing, the solutions to which constitute the subject of this invention. For example, since the value of the resistance in the equivalent delta network branch bears an exact mathematical relationship to the respective values of the three Y network resistors, it is essential that these latter values not only be known precisely when the network is assembled, but that they remain constant throughout the life of the standard. When resistors in the multimegohm region are used for precision applications, such as, for example, in the Y network cited, the resistivity of any insulation which supports or otherwise isolates these resistors becomes itself quite critical. Even the best organic insulators are known to age or change in their resistivity characteristics in response to ambient conditions such as temperature, dust and humidity. The propensity of insulation resistivity to change coupled with the tendency of at least some current to leak through any insulator eventually makes a precision network using solid insulation unreliable as a highly accurate standard.

2

Moreover, such a network to be reliable as a calibration standard must be shielded from electrostatic disturbance and from conditions of dirt, moisture, et cetera, which as noted, tend to vary the resistance of the component and promote parallel leakage. At the same time, however, the network must be readily employable and securely housed for protection during use and storage as well as for safe transportaiton to a calibrating center such as the Bureau of Standards.

Finally, for reasons of protection cited and for efficiency of operation, it is necessary that each single resistance can be calibrated without having to remove the resistor from the network or to remove the network from its housing.

Accordingly, an object of this invention is to eliminate completely the problems of parallel leakage and resistivity changes in a resistance network.

Another object of the invention is to house conveniently and protectively a precision resistance network.

A further object of the invention is to simplify the storing and transporting of such a network.

A further object of the invention is to simplify the calibration of the entire network and of the individual resistors in the network, without having to remove or otherwise disturb the resistors.

A further object of the invention is to eliminate electrostatic charge build-up on the individual resistors of the network when in storage.

These and other objects are achieved through the inventive principle by an assembly of insulation-free resistors attached in a Y network that is connected through leads to the appropriate terminals of a bridge as described earlier, which assembly is permanently contained within a shielding device that includes means adjustable from without for supporting the assembly within the device, for isolating completely the entire assembly from the device so that the only insulator is air and for isolating each individual resistor for recalibration by measurements across the leads.

In one embodiment of the invention herein described, the Y network is supported in its housing by two terminals and two associated metal disks. The terminals lead out from a protective housing through connectors and plug into a bridge or test equipment. In accordance with one feature of the invention, when not in use as a standard, the network is held rigidly in a fixed place within the housing by several support pins and anchor pins which impinge upon the terminals and the disks. The assembly is employed as a standard by plugging the connectors into corresponding connectors on the bridge and withdrawing the support and anchor pins. The network thereby is supported by the bridge connectors in exactly the position it occupies when held by the support and anchor pins. There is no mechanical, electrical or insulation connection whatsoever between the network assembly and the protective housing, except for the air within the housing. After the bridge is calibrated, the pins are replaced, and the housing and network assembly are removed from the bridge.

In another embodiment of the invention each of the resistors of the Y network is supported by a pair of jaws adjustable from outside the housing by a thumb screw. The jaws grasp a connector on one end of which the resistor is mounted and on the other end of which there is a female connector for mating with corresponding male connectors on the mating bridge. When in storage, the network is held in place within the housing by the action of the three jaw pairs. The assembly is employed as a standard by plugging the connector into the bridge terminals and by backing down on the thumb screws to open the jaws away from the connector. This alternate embodiment also enables the network to be supported by the bridge connectors in the position it occupies when held by the jaw pairs.

In accordance with another feature of the invention, each resistor in the network may be shorted out by means including a housing-mounted shorting screw, so that no electrostatic charge build-up on the component resistors which could alter the network's characteristics may occur.

In accordance with a further feature of the invention, each of the Y network resistances in turn may be recalibrated on a primary standard bridge by employing simple adaptors and by properly manipulating the shorting screw and support and anchor pins, as will be described later. The resistances need not be removed from the circuit nor need the network even be exposed because the measurements are taken across the standard connectors with the protective housing in place.

Accordingly, a feature of the invention relates to a network that is supported within a protective housing or completely isolated within the housing from all but the outside connecting terminals by simple manual adjustments made from without.

Another feature of the invention resides in the employment of these outside adjustments to isolate each individual resistor so that it can be calibrated by itself without disturbing the network or removing the resistor from its housing.

These and other objects and features of the invention will be made more apparent by the detailed description of an illustrative embodiment to follow, and by referring to the drawing in which:

FIG. 1 is a perspective view of the carrying case;

FIG. 2 shows in perspective the mounting plate with the complete standard in place;

FIG. 3 is a partial cut-away in perspective showing the standard network with the housing removed;

FIG. 4 is a plan view partial section of the standard;

FIG. 5 is a sectional plan view showing the network;

FIG. 6 is a sectional side view of the housing;

FIG. 7 is a sectional side view showing support of the disks;

FIG. 8 is a plan view in partial section showing connector extensions and the adaptors in place;

FIG. 9 is a rotated sectional plan view showing the adaptors;

FIG. 10 shows the standard installed on a bridge;

FIG. 11 is a circuit schematic showing use of the entire network on a bridge;

FIG. 12 is a circuit schematic showing a method of measuring the first resistor alone;

FIG. 13 is a circuit schematic showing a method of measuring the third resistor alone;

FIG. 14 is a circuit schematic showing a method of measuring the second resistor alone;

FIG. 15 is a circuit schematic showing a typical measuring bridge circuit and the Y network connected to it;

FIG. 16 is a sectional view showing an alternative support;

FIG. 16A is an enlarged fragmentary view of the clamp member shown in FIG. 16;

FIG. 17 is a plan view showing an alternative support detail;

FIG. 18 is a circuit schematic showing a method of measuring the complete Y standard, using alternative support;

FIG. 19 is a circuit schematic showing a method of measuring a first resistor alone, using alternative support;

FIG. 20 is a circuit schematic showing a method of measuring a second resistor alone, using alternative support; and

FIG. 21 is a circuit schematic showing a method of measuring a third resistor alone, using alternative support.

Structure

Referring first to FIG. 1, a storage case **1** with a handle **2** is shown, in which the standard may be stored when not in use or when being transported. In FIG. 2, a mounting plate **3** on which is fastened a mounting ring **10** secures to case **1** with several thumbscrews **4**. Ring **10** includes clamping sleeve **11** and clamp screw **12** which grasp a collar support **50** shown in FIG. 3, so that the standard is held securely within the case. Plate **3** includes a foot **7**, mounted at right angles to a lower edge **8**, to support plate **3** in an upright position. Within mounting ring **10** are secured two hermaphroditic connectors (best seen in FIG. 3) on which are mounted the connectors of the standard, to be described later. Plate **3** is also the assembly jig for the standard. Shown also in FIG. 2 is housing **20** with an end plate **25** screwed thereto, and the outside portion of anchor pins **31**, **32**, **42**, the support pins **54**, **55** and shorting screw **30**, the functions of which will be described later.

FIGS. 3, 4 and 5 show one illustrative embodiment of the housing means, the network support means, the network connected means and the adjustment means. As shown in FIG. 3, collar support **50** secures to collar **45** which fastens to the shield of a bridge (not shown) or to mounting ring **10**. The network support means includes a first and a second mounting means, termed for illustrative purposes a first disk **60** and second disk **70**. Disks **60** and **70** are centrally positioned respectively within collar support **50** by support pins **54** and **55**. Support pins **54** and **55** have threads **56** that engage in spaced tapped holes **57** of collar support **50**. Disk **60** has first and second apertures **61** and **62**. Soldered to aperture **71** of disk **70** is a first hermaphroditic connector **73** having inner element **74** and outer element **75**. Soldered to aperture **62** of disk **60** and passing clear of disk **70** through aperture **72** is second hermaphroditic connector **63** having inner element **64** and outer element **65**. In FIG. 4, a first terminal pin **66** having a fittting **80** mates with inner element **64** of connector **63**. A second terminal pin **76** having a fitting **90** mates with the inner element **74** of connector **73**.

The resistor network is supported as follows. Referring to FIGS. 5 and 6, a resistor support **83** fastened to fitting **80** ties a termination assembly **84** to the lower end **86** of a first resistor **85**. Another resistor support **93** fastened to fitting **90** ties termination assembly **94** to the lower end **96** of a second resistor **95**. As seen in FIG. 3, each of these resistors **85** and **95** are thereby mounted generally parallel with the inner wall of housing **20**. A common bus **100** is linked by termination assemblies **102** and upper ends **87** and **97**, respectively, to resistors **85** and **95**. Also attached to common bus **100** is shorting strap **101** that can be linked electrically to housing **20** by shorting screw **30** that, as seen in FIG. 1 screws into a threaded block **33**. Bus **100** is also common to a third resistor **105** which is supported by its upper end **107** through termination assembly **102**, and by its lower end **106** through a termination assembly **108** that is mounted on disk **60**.

In accordance with the invention, the entire resistor network, the buses, the disks and the hermaphroditic connectors can be isolated completely from the shielding consisting of housing **20**, collar support **50** and collar **45**; or can be rigidly supported therein by action of the

several pins now to be described. Referring first to FIG. 4, anchor pins **31** and **41** are shown in position, passing into drill holes **91** and **92** of fitting **90**. Pins **31** and **41** have threads **56** which engage tapped holes **38** in fixed mounting blocks **26** and **36**, respectively. In similar fashion, anchor pins **32** and **42** are shown in position passing through drill holes **81** and **82**, respectively, of fitting **80**. Pins **32** and **42** also have threads **56** which engage tapped holes **38** in fixed mounting blocks **27** and **37**, respectivly, As seen in FIGS. 5 and 7, support pins **54** and **55** hold disks **60** and **70**, respectively, in position. Shorting screw **30** impinges upon shorting strap **101** to eliminate possible electrostatic charge build-up between the resistors during storage. With the several support pins positioned as described and the standard secured within its mounting ring **10**, the standard may readily be stored or shipped in its case **1**.

FIG. 6 shows resistance supports **83** and **93** attached respectively to fittings **80** and **90** and to resistors **85** and **95**, respectively.

FIGS. 8 and 9 shows additional structure necessary when the individual resistors are to be calibrated. A spacing ring **110** slips over a flanged portion of collar support **50**. Shield ring **115** fits within a flanged portion **111** of ring **110**. The assembly plugs into a D.-C. resistance bridge **120** as, for example, shown in FIG. 10 on which are provided hermaphroditic connectors (not shown) similar to those seen in FIG. 3. As seen in FIG. 10, a pair of threaded stand-offs **122** are exended with insulated extensions **112**. These in turn connect to retainer **116** and screws **118** which bears down upon and firmly holds the standard onto the bridge.

Connectors **63** and **73** are extended by special adaptors such as inner adaptor **114** or inner-outer adaptor **117**, both shown in FIG. 8, and which will be described hereinafter.

Operation

Operation of the Y standard may be more readily understood by describing its use on a typical measuring bridge. The basic circuit within the measuring bridge is essentially a Wheatstone bridge as shown in FIG. 15 and is, of course, well known. The variable resistors therein are shown as R1, R2 and R3; and the bridge corners are indicated as A, B, C and D. The usual battery is connected across A and D corners. The unknown resistance is connected between the C and D corners to the bridge terminals X_1 and X_2. A guard circuit (shown in FIG. 15 as a dotted line) surrounds the X_1 potential so that leakage may be returned to the A corner of the bridge in accordance with usual practice. The various elements of the Y standard are connected in various manners to specific points on the measuring bridge, and reference will be made to the above designations in the later circuit descriptions.

In accordance with the invention, the standard is used to calibrate a conductance bridge or a resistance bridge by removing the standard from mounting ring **10**, and mating its connectors **63** and **73** with corresponding hermaphroditic connectors on the bridge (not shown). The description to follow is best illustrated by reference to FIGS. 4–10. With the standard connected to the bridge, support pins **54** and **55** that support disks **60** and **70**, respectively, and pins **31**, **32**, **41** and **42** that hold fittings **80** and **90** in place are removed and replaced by short cap screws (not shown) to maintain good shielding. Shorting screw **30** is partially withdrawn. With these adjustments completed, the entire resistance network including disks **60** and **70**, terminals **66** and **76**, fittings **80** and **90**, resistors **85**, **95**, **105**, supports **83** and **93** and common bus **100** are rigidly suspended within the standard insulated from the housing by air and protected from all outside influences by the shielding of the housing itself; and connected electrically and mechanically to the bridge by means of the connectors **63** and **73**.

When calibration of the bridge is completed, the support pins **54** and **55**, the anchor pins **31**, **32**, **41** and **42** are replaced and the shorting screw **30** is tightened to provide support for the standard network so that it may remain suspended in place within the housing upon removal.

In accordance with the invention, the calibration of the Y network and of each individual resistor therein may be accomplished without removing the resistors from the protective housing or disturbing the network. These operations are described below.

The standard is first made ready for these measurements by connecting spacing ring **110** and by adding shield **115** onto ring **110** as shown, for example, in FIG. 8. This isolates housing **20** from ground in order that it can become a part of the measurement circuit in accordance with the invention. Next, two inner element extensions **114** (both of the type labeled **114** in FIG. 8) are attached respectively to the inner elements **64** and **74** of the connectors **63** and **73**, as shown schematically in FIG. 13. As seen in FIG. 10, two nonconductive stand-off extensions **112** are added to stand-offs **122** seen in FIG. 11, and the standard is secured to the measuring bridge with retainer **116** and thumbscrews **118**.

It is necessary to employ a metal shield to cover the entire standard including its case **20** when the individual resistors are being calibrated. Such a shield is shown in FIGS. 12, 13, 14 and 15 as element **130** schematically.

It is convenient to measure first the value of the resistor **85**. Accordingly, anchor pins **32** and **42** which support resistor **85**, are removed. Shorting screw **30** is engaged to common bus **100**. Anchor pins **31** and **41** are engaged as are the support pins **54** and **55** that support disks **60** and **70**.

FIG. 12 shows schematically the electrical and mechanical connections that result in a circuit between the two inner elements of the hermaphroditic connectors **124** and **134** on the bridge, in which only resistor **85** is a component. Extension **114** plugs into the inner connector **124**, which is the so-called "X_1" terminal of the bridge, and connects with inner element **64** which joins resistor **85** through terminals **66** and fitting **80**. The engaging of bus **100** by shorting screw **30** connects the other side of resistor **85** electrically to case **20**. Since pins **31** and **41** are inserted into fitting **90**, a path is thereby provided from the one side of resistor **85** through shorting screw **30** and case **20** on through pins **31** and **41** to fitting **90**, thence to second terminal **76**, inner element **74** and second extension **114**, and finally to inner element **134** on the bridge. A direct short across resistor **95** is provided by the path consisting of common bus **100**, shorting screw **30**, case **20**, pins **31** and **41** and second fitting **90**, removing resistor **95** from the circuit. Resistor **105** is shorted out across case **20** by the action of shorting screw **30**, common bus **100**, outer conductor **65**, first disk **60** and support pins **54**. After resistor **85** has been measured, pins **32** and **42** supporting resistor **85** are reinserted.

To measure resistor **105**, the standard must first be removed from the bridge and extension **104** replaced by an inner-outer element adaptor **117** as shown in FIG. 13; thereafter the standard is replaced in the bridge. In order now to provide a circuit across the bridge terminals **124** and **134**, in which the only component is resistor **105**, the support pins **54** that support disk **60** are removed. Support pins **55** are fully inserted as are pins **31**, **32**, **41** and **42**.

As shown in FIG. 13, the circuit from bridge inner element **124** comprises adaptor **117**, outer conductor **65** disk **60**, assembly **108**, resistor **105**, common bus **100**, shorting screw **30**, housing **20**, pins **31** and **41**, fitting **90**, terminal **76**, inner conductor **74**, extension **114** and finally inner element **134** on the bridge. Neither resistor **85** nor resistor **95** forms part of the circuit since each is shorted out: resistor **85** by bus **100**, shorting

screw **30**, case **20** and pin **42**; and resistor **95** by bus **100**, shorting screw **30**, case **20** and pin **41**. With measurement of resistor **105** completed the three thumbscrews **54** should be reinserted.

To measure resistor **95**, pins **31** and **41** which support resistor **95** are removed. Support pins **55** and anchor pins **32** and **42** are engaged. FIG. 14 shows schematically the circuit diagram for this measurement and is as follows. From bridge terminal **124** adaptor **117** connects to outer element **65** which is grounded to case **20** by support pins **54**. From here the path consists of case **20**, shorting screw **30**, common bus **100**, resistor **95**, termination assembly **94**, resistance support **93** on fitting **90**, terminal **76**, inner element **74**, extension **114** and finally bridge terminal **134**. On completion, pins **31** and **41** are replaced.

To measure the entire Y network, extension **112**, extension **114**, adaptor **117**, insulator **115** and spacing ring **110** are removed, and the standard re-attached to bridge **120** and secured with stand-offs **122**. Shorting screw **30** is backed off from the common bus **100**, but not completely removed. Pins **54** and **55** and pins **31**, **41**, **32** and **42** are removed and shielding screws (not shown) inserted. The foregoing is most readily visualized with the aid of FIGS. 10 and 11.

Referring back to FIG. 12, resistor **85** is supported upon block **80** which connects with terminal **66** that plugs into inner element **64**. Element **64** joins with bridge terminal **124** through extension **114**. Resistor **105** is mounted on disk **60** which in turn is soldered to the outer element **65** of connector **63**. Element **65** contacts outer element **125** on the bridge. In addition to forming a part of the guard circuit, element **125** is connected within the bridge circuit itself. Resistor **95** is connected to fitting **90** mounted on terminal **76** which contacts inner element **74** of connector **73**. Element **74** contacts element **134** which is the second terminal of the bridge circuit.

When the measurement of the Y network has been made and the circuit deactivated, support pins **54** and **55** and anchor pins **31**, **32**, **41** and **42** are all reinserted to provide support for the network elements, and the entire standard is removed and replaced in its mounting ring and finally its storage case **1**.

An alternative method for rigidly supporting the network within the housing and for withdrawing the support may be desirable in some instances. As shown in FIGS. 16, 16A, and 17, resistors **85**, **95**, and **105** are located in housing **20**, supported at the top by common bus **250** through caps **251** that grasp each resistor. End cap **25** again includes shorting screw **30** that screws into threaded block **33** and contacts or releases bus **250**. Each resistor at its other end attaches to a connector **230**, preferably by its pig-tail lead that attaches to the outer surface of the connector. Each connector **230** may be generally cylindrical as shown and has parallel grooves **232** and a female end **233**. Three restraining mountings **210** each having a slot **211**, guide hole **212** and clearance hole **213** are attached in symmetrical spacing around the inside of housing **20**. In each mounting **210**, a thumbscrew **200** having a shaft portion **201** is guided for rotation in hole **212**. Shaft portion **201** includes a series of right-hand threads **202** and left-hand threads **203** separated by a shoulder **204**. Jaw pair **220**, having an upper jaw **221** and lower jaw **222**, are threadedly attached, respectively, to the right-hand and left-hand threads of thumbscrew **200** and are guided for travel within slot **211** of mounting **210**. Each connector **230** is located within the respective hole **213** in such fashion that its parallel grooves **232** may be grasped by action of its jaw pair **220** upon tightening of the thumbscrew **200**. Each connector **230** lines up with a corresponding one of the male connectors (not shown) on the measuring bridge in a manner to be described later. A protective plate **245** is fastened in place at the lower end of housing **20** to guard the network from damage.

The operation of the alternative embodiment of the invention in conjunction with the measuring bridge earlier described and shown in FIG. 15 is as follows. The standard is connected to the three male bridge terminals as is shown schematically in FIG. 18 and each of the three thumbscrews **200** are backed off, opening each jaw pair **220** away from its corresponding connector **230**. Shorting screw **30** is partially withdrawn. With these adjustments completed, the entire resistance network including bus **250** and connectors **230** are rigidly suspended within the standard, insulated from housing **20** by air and electrostatically protected by the shielding effect of the housing; and is connected electrically and mechanically to the bridge by means of the three connectors **230**.

When calibration of the bridge is completed, the three thumbscrews **200** are tightened causing each jaw pair **220** to again grasp its corresponding connector **230** thereby to support the standard network so that it is held in place within the housing and may thereby be removed from the bridge. Shorting screw **30** is tightened down on bus **250**.

Measurement of each individual resistor may be accomplished in the alternative embodiment as described below.

To measure the individual resistors the standard is made ready by connecting insulator **240** to housing **20**, to isolate housing **20** from ground so that it can be used as a part of the measuring circuit pursuant to the invention. Referring to FIG. 19, extensions **235**, shown schematically, are plugged into X_1 and X_2 terminals to connect them with resistors **85** and **95**, respectively. To measure resistor **85** the thumbscrew **200** that supports resistor **85** is backed off withdrawing the jaw pair **220** from the connector **230**. Shorting screw **30** is tightened down. There is no connection between resistor **105** and the A corner of the bridge. Resistors **105** and **95** are both supported in place. With these connections made it is seen that resistor **85** is the sole element across the X_1, X_2 terminals and may be measured.

As best seen in FIG. 20, to measure resistor **95**, its thumbscrew **200** is backed off withdrawing the jaw pair **220** from the connector **230**. Resistors **85** and **105** are supported in place by the gripping action of their respective jaw pairs **220**, actuated by their thumbscrews **200**. Resistor **105** is not connected to any terminal. With these connections, resistor **95** is presented as the sole component across the X_1, X_2 terminals and may be measured.

To measure resistor **105**, the extension **235** that connected the X_1 terminal with resistor **85** is removed and a special adaptor **236**, such as shown schematically in FIG. 21, is employed to connect the X_1 terminal with resistor **105**. The support for resistor **105** is withdrawn, while the supports for resistors **85** and **95** are left in place. Resistor **85** is not connected to any terminal. Shorting screw **30** is also tightened down. With these connections made, resistor **105** is presented across the X_1, X_2 terminals as the sole component and may be measured.

All of the operations described apply equally well to a resistance bridge as to a conductance bridge.

Persons skilled in the art may make changes in the arrangements described and it is to be understood that the embodiments shown and described are merely illustrative of the principles of the invention and are not to be construed in a limiting sense.

What is claimed is:

1. Apparatus for calibrating an electrical bridge comprising, in combination, a plurality of electrical resistor elements forming a Y network, housing means for enclosing said network, support means for mounting said network in said housing, said support means including means for connecting said network electrically and mechanically to a bridge connection, adjustment means operable from outside said housing means for fixedly holding said support means within said housing and for releasing said support means when said connecting means is

connected to said bridge connection during calibration thereby to isolate electrically and mechanically said network from said housing means, and means including said adjustment means for selectively connecting and disconnecting each of said elements from said network whereby each successive element is connected individually to said bridge.

2. Apparatus in accordance with claim **1** wherein said support means includes first and second mounting means, said connecting means includes first and second hermaphroditic connectors each having an inner and an outer element that connect respectively with corresponding inner and outer elements of a third and fourth hermaphroditic connector comprising said bridge connection, each of said first and second hermaphroditic connectors being affixed by its outer element respectively to said first and second mounting means, and said adjustment means includes a first and a second plurality of retractable support pins which engage and disengage said first and second mounting means respectively thereby to hold said support means during storage and plug-in and to release said support means during calibration.

3. Apparatus in accordance with claim **2** wherein said support means further includes a first and a second terminal pin integral respectively with said inner elements of said first and second connectors, each of said terminal pins having at least one recess, and said adjustment means further includes a first and a second set of retractable anchor pins, each set comprising at least one said pin, whereby said first and second pin sets engage and disengage respectively said first and second terminal pins thereby to hold said terminal pins during storage and plug-in and to release said terminal pins during calibration.

4. Apparatus in accordance with claim **3** wherein said Y network comprises first, second and third resistor elements each having first and second ends, said first ends being connected to form a common point, said second end of said first element being connected to said first termnal pin, said second end of said second element being connected to said second terminal pin and said second end of said third element being connected to said second mounting means whereby on engagement of said first and said second plurality of retractable support pins and of said first and said second sets of retractable anchor pins said network is held rigidly and upon disengagement of the aforesaid support pins and anchor pins during calibration said network is isolated electrically and mechanically from said housing.

5. Apparatus in accordance with claim **4** wherein said selective means includes means for connecting and disconnecting electrically said housing means and said network at said common point thereby to short out each said element and prevent electrostatic charge build-up during storage of said network.

6. Apparatus in accordance with claim **4** further including means for insulating said housing means from said bridge and wherein said selective means includes shorting means for connecting and disconnecting electrically said housing means and said network at said common point whereby when said support pins are engaged in said mounting means, said first set of anchor pins is disengaged from said first terminal pin, said second set of anchor pins is engaged in said second terminal pin and said shorting means are connecting said housing means and said network common point, an electrical path including said housing means is established across said inner members of said third and fourth hermaphroditic connectors of said bridge connection in which the sole component is said first element.

7. Apparatus in accordance with claim **4** further including means for insulating said housing means from said bridge, adaptor means for connecting said outer element of said first hermaphroditic connector with said inner element of said third hermaphroditic connector located on said bridge and wherein said selective means includes shorting means for connecting and disconnecting electrically said housing means and said network at said common point whereby when said support pins are engaged in said mounting means, said first set of anchor pins is engaged to said first terminal pin, said second set of anchor pins is disengaged from said second terminal pin and said shorting means are connecting said housing means and said network common point, an electrical path including said housing means is established across said inner members of said third and fourth hermaphroditic connectors of said bridge connection in which the sole component is said second component.

8. Apparatus in accordance with claim **1** wherein said support means comprises means affixed to one end of each said element and having a gripping surface, and said connecting means includes a terminal on said support means for mating each said element to a corresponding terminal on said bridge, and said adjustment means includes rotatable means for alternately gripping and releasing said affixed means at said gripping surface thereby to hold said network during storage and plug-in and to release said network during calibration.

9. Apparatus in accordance with claim **8** wherein each said adjustment means includes a pair of jaws and means operable from outside said housing means for opening and closing said jaws, whereby said support means for each said element in said network is selectively gripped and released.

10. Apparatus in accordance with claim **9** wherein said network comprises first, second and third elements each having first and second ends, said first ends being connected to form a common point and said second end of each said element being anchored in a respective one of said support means, and said adjustable means includes first, second and third thumbscrews secured for rotatable motion and operable from outside said housing, each said thumbscrew having a shaft within said housing, each said shaft including a first portion having right-hand threads and a second portion having left-hand threads, each said jaw pair being threadedly engaged to said first and second threaded portions of said shaft whereby each of said first, second and third elements is selectively gripped and released, respectively, by rotation of said first, second and third thumbscrews.

11. Apparatus in accordance with claim **10** wherein said selective means includes means for connecting and disconnecting electrically said housing means and said network at said common point thereby to short-out each said element and prevent electrostatic charge build-up during storage of said network.

References Cited by the Examiner

UNITED STATES PATENTS

1,146,592	7/1915	Northrup	338—77 X
2,484,030	10/1949	Hastings et al.	

References Cited by the Applicant

AIEE Transactions "A Precision, Guarded Resistance Measuring Facility," September 1958, pp. 471–475.

JOHN F. COUCH, *Primary Examiner.*

A. D. PELLINEN, *Assistant Examiner.*