TELEPHONE LINE CONCENTRATOR

Filed Oct. 31, 1960 29 Sheets-Sheet 1

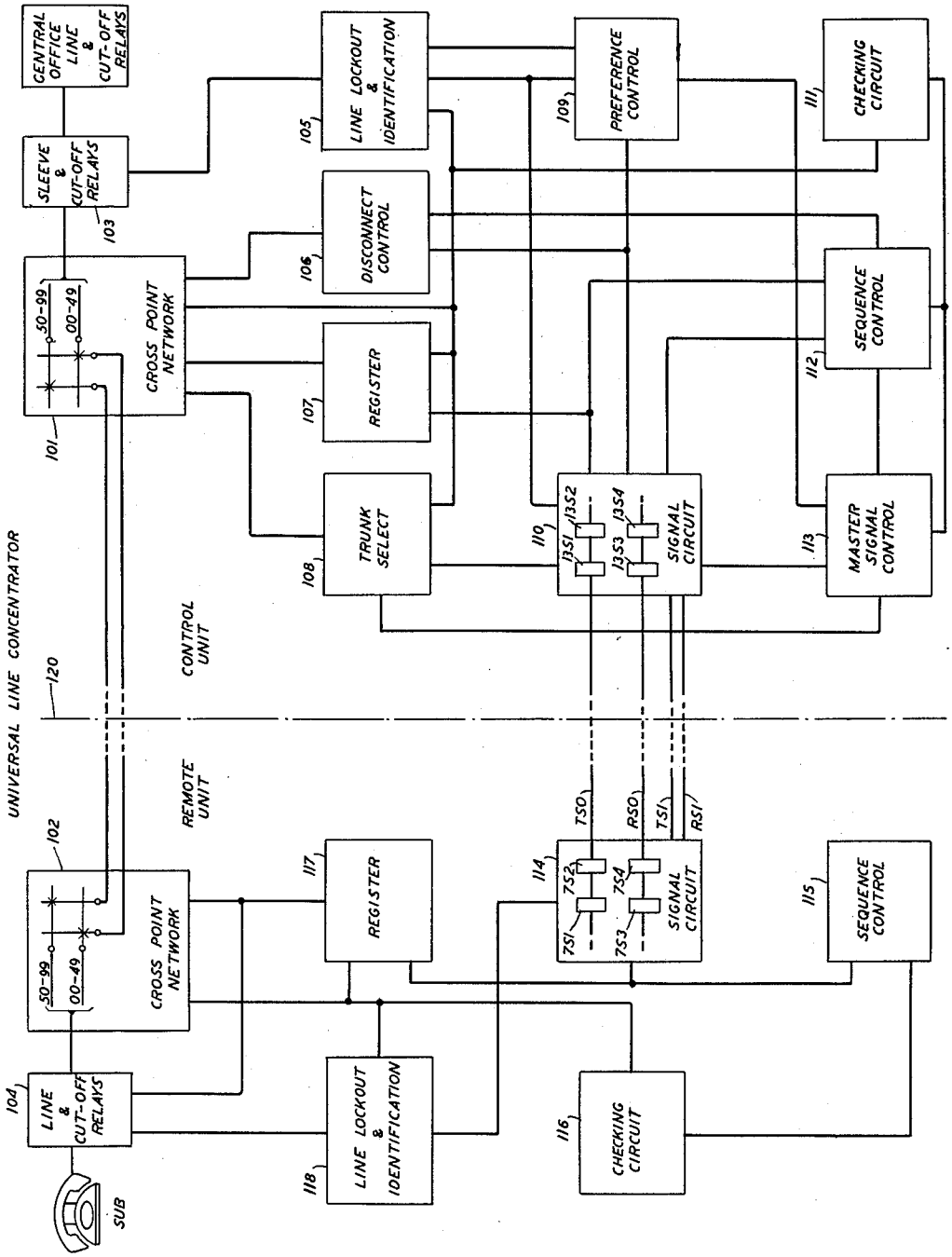

FIG. 1

INVENTORS F. E. BLOUNT
M. E. KROM
BY S E Hollander
ATTORNEY

TELEPHONE LINE CONCENTRATOR

Filed Oct. 31, 1960 29 Sheets-Sheet 2

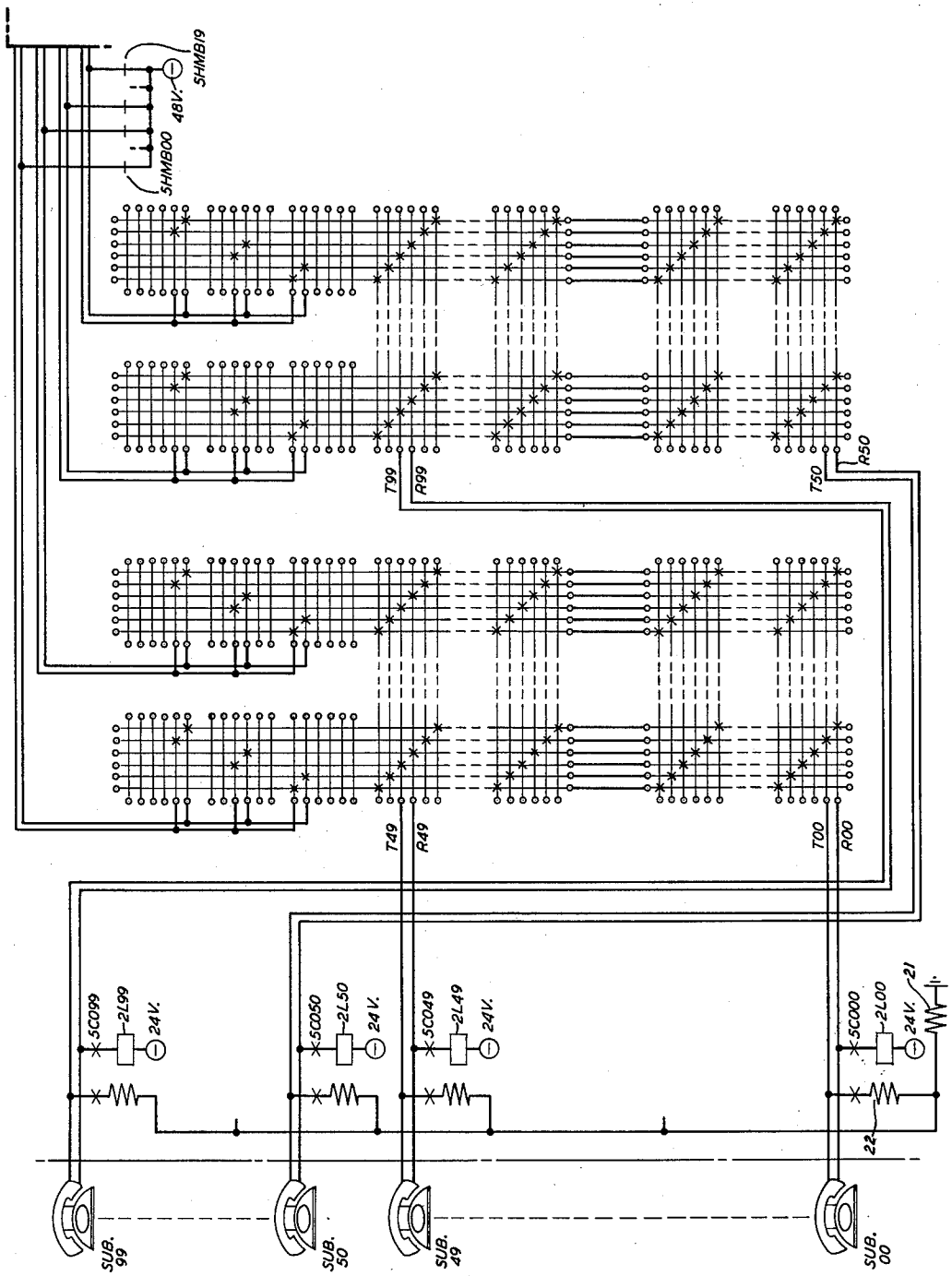

FIG. 2

INVENTORS F. E. BLOUNT
M. E. KROM
BY S E Hollander
ATTORNEY

TELEPHONE LINE CONCENTRATOR

Filed Oct. 31, 1960 29 Sheets-Sheet 3

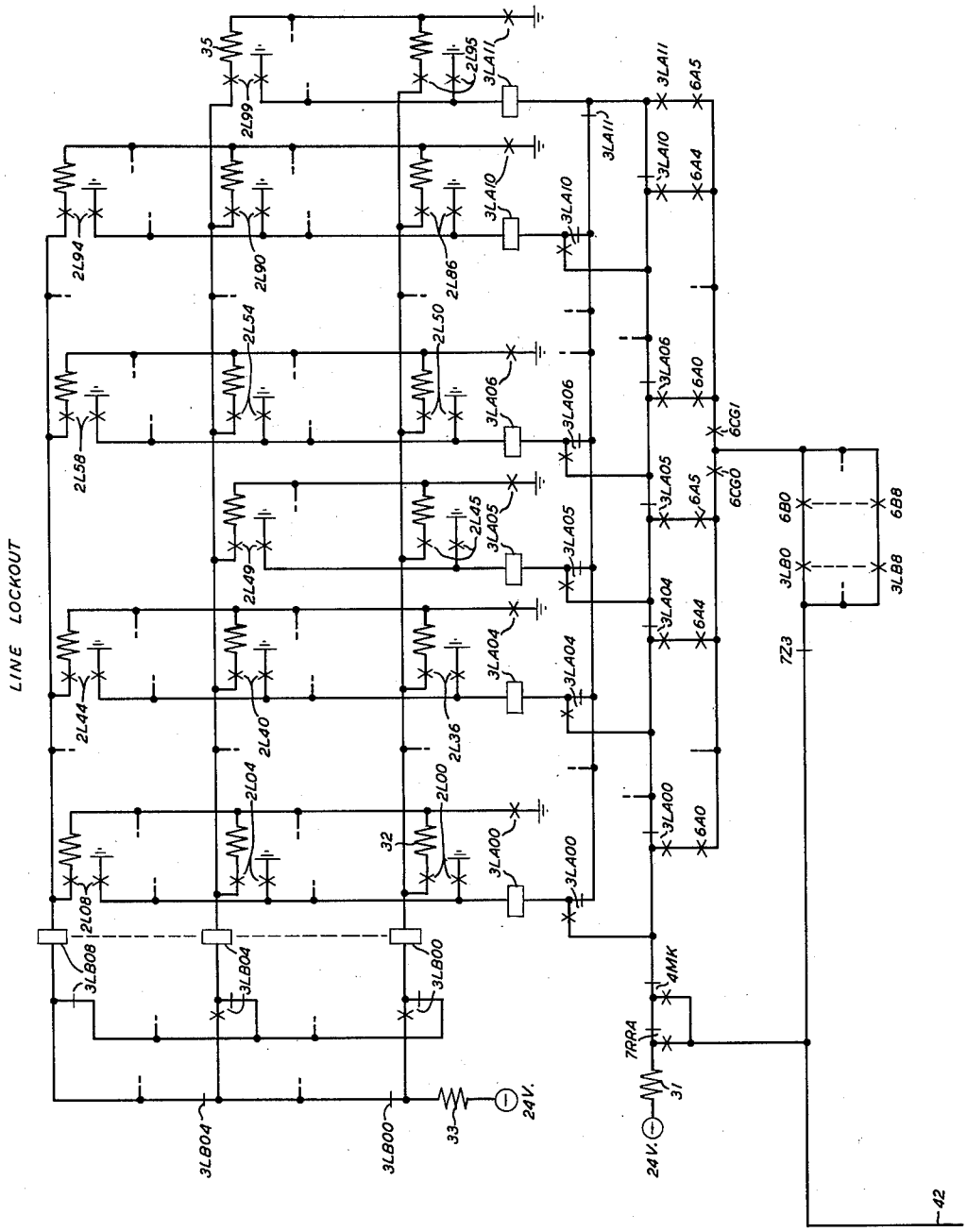

FIG. 3

INVENTORS F. E. BLOUNT
M. E. KROM
BY S. E. Hollander
ATTORNEY

TELEPHONE LINE CONCENTRATOR

Filed Oct. 31, 1960 29 Sheets-Sheet 4

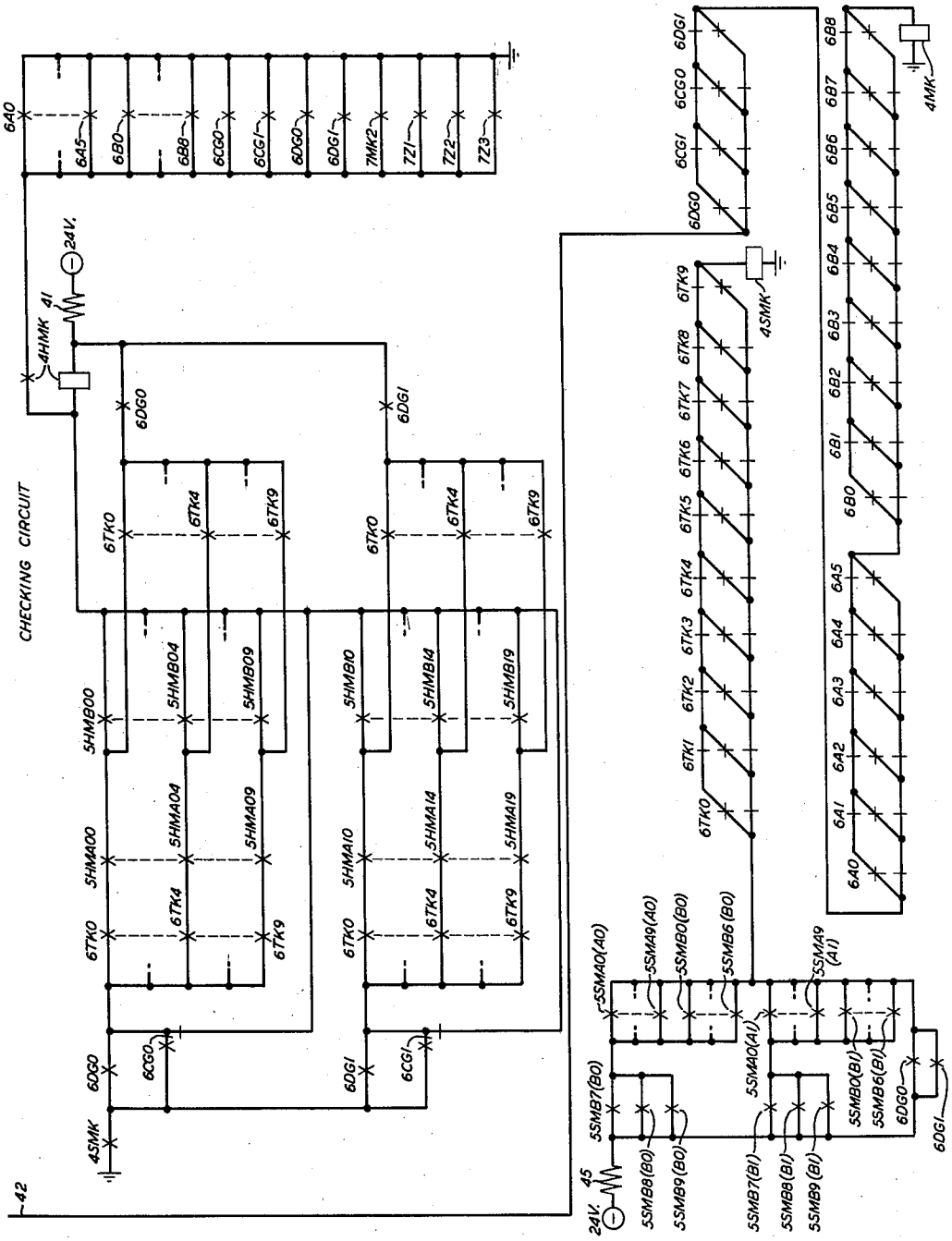

FIG. 4

INVENTORS F. E. BLOUNT
M. E. KROM

BY S E Hollander

ATTORNEY

TELEPHONE LINE CONCENTRATOR

Filed Oct. 31, 1960 29 Sheets-Sheet 5

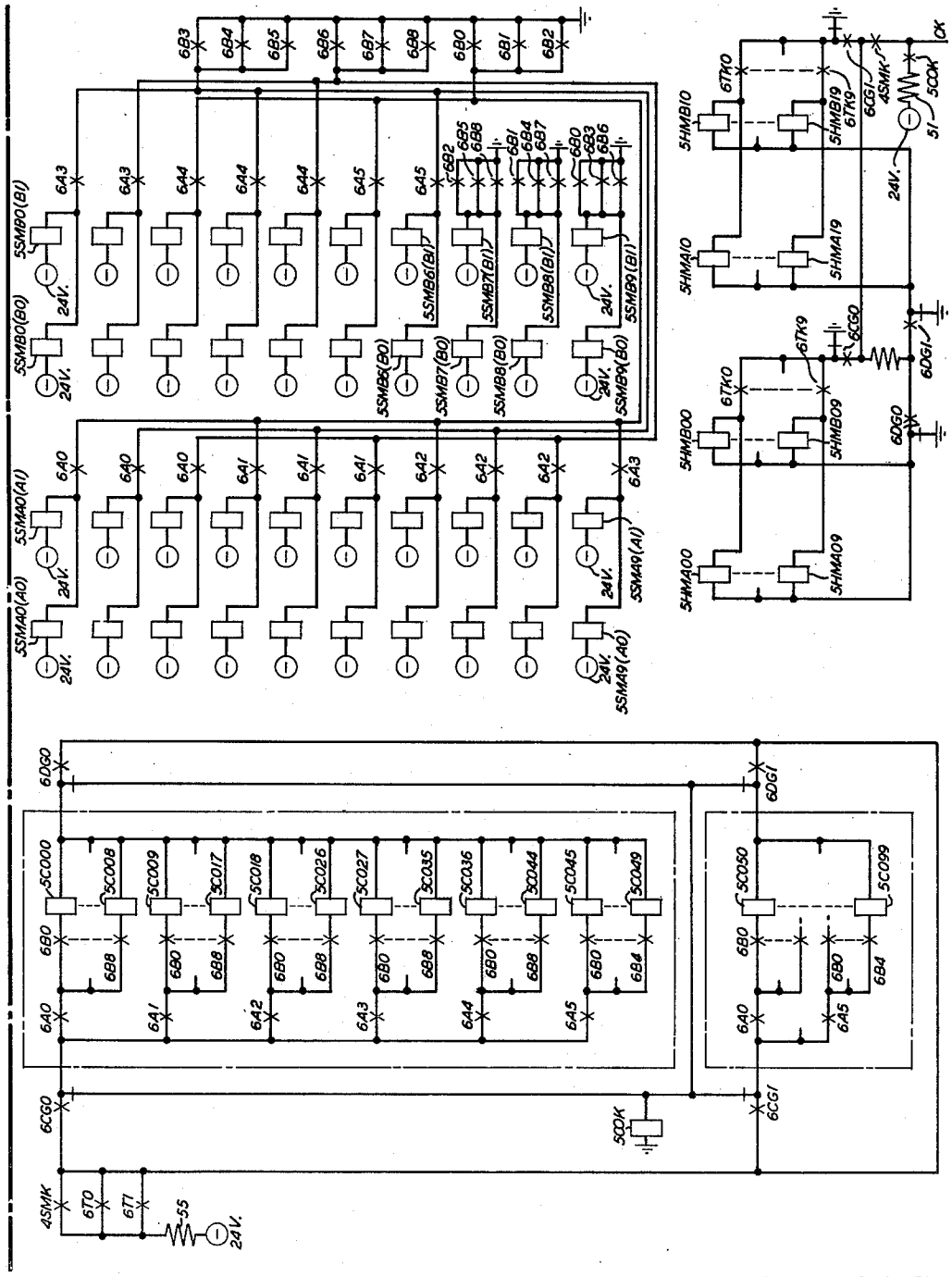

FIG. 5

INVENTORS F. E. BLOUNT
M. E. KROM
BY S E Hollander
ATTORNEY

TELEPHONE LINE CONCENTRATOR

Filed Oct. 31, 1960 29 Sheets-Sheet 6

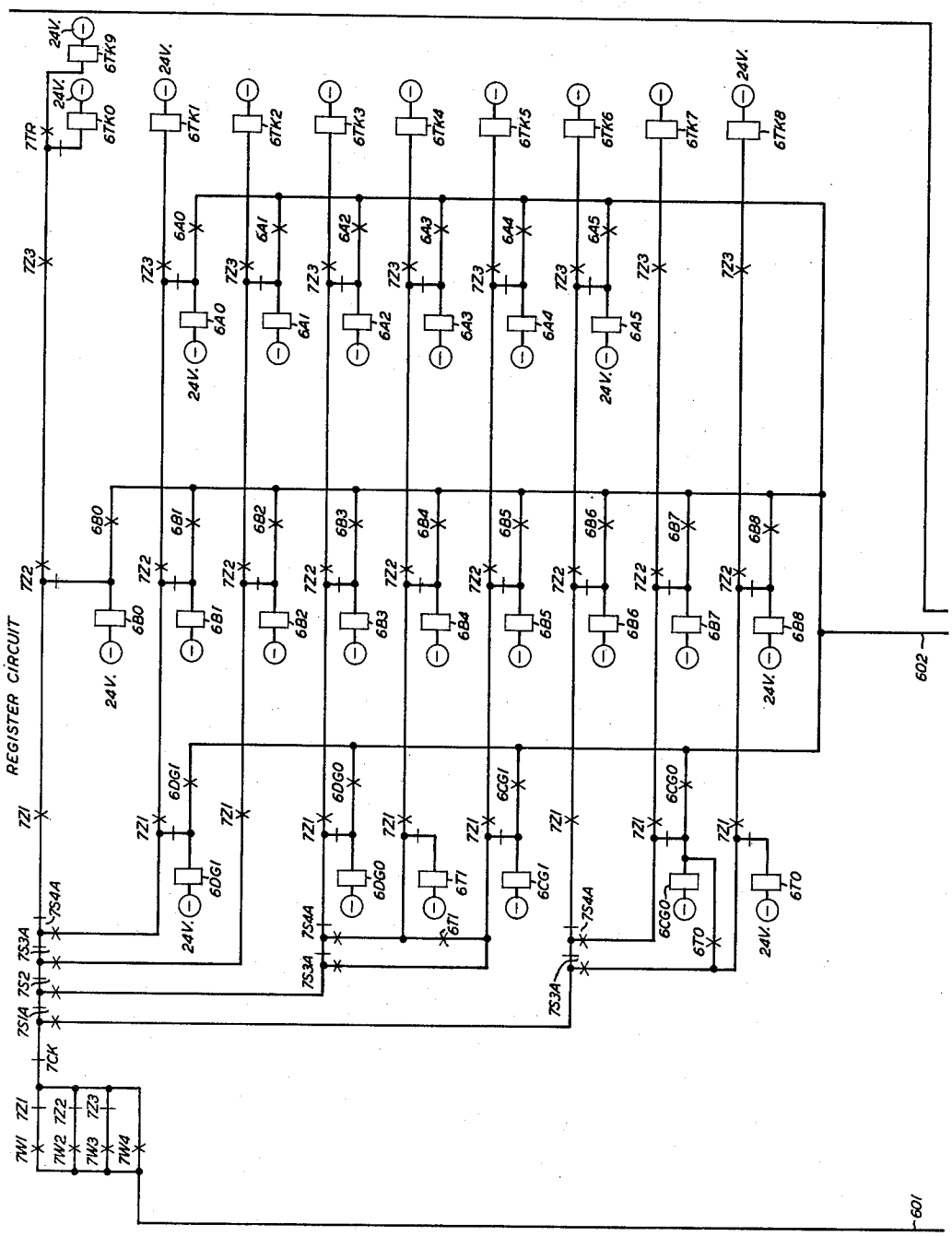

FIG. 6

INVENTORS F. E. BLOUNT
M. E. KROM
BY S E Hollander
ATTORNEY

TELEPHONE LINE CONCENTRATOR

Filed Oct. 31, 1960 29 Sheets-Sheet 7

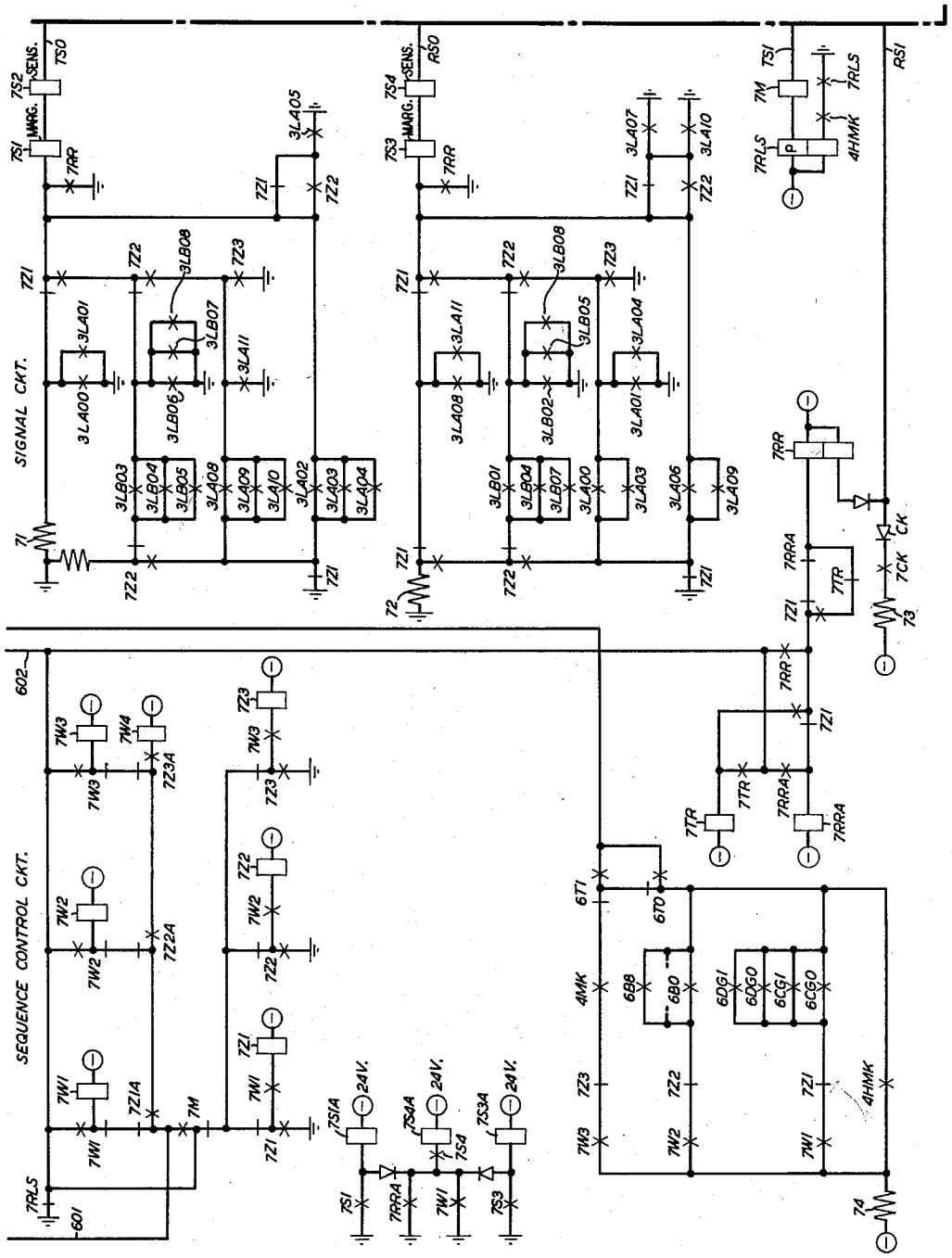

FIG. 7

INVENTORS F.E. BLOUNT
M.E. KROM
BY S E Hollander
ATTORNEY

TELEPHONE LINE CONCENTRATOR

Filed Oct. 31, 1960 29 Sheets-Sheet 8

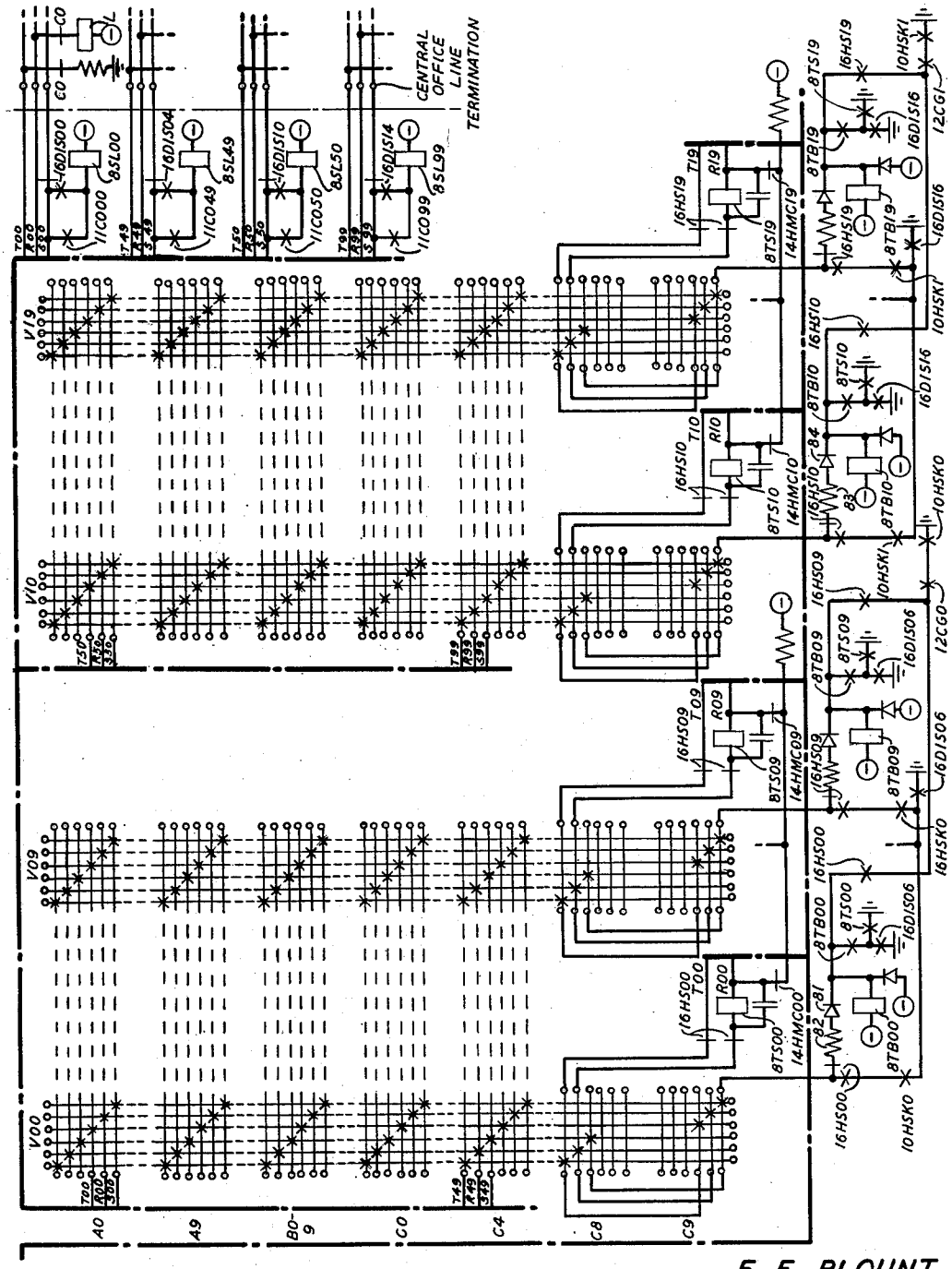

FIG. 8

INVENTORS F. E. BLOUNT
M. E. KROM
BY S F Hollander
ATTORNEY

TELEPHONE LINE CONCENTRATOR

Filed Oct. 31, 1960 29 Sheets-Sheet 9

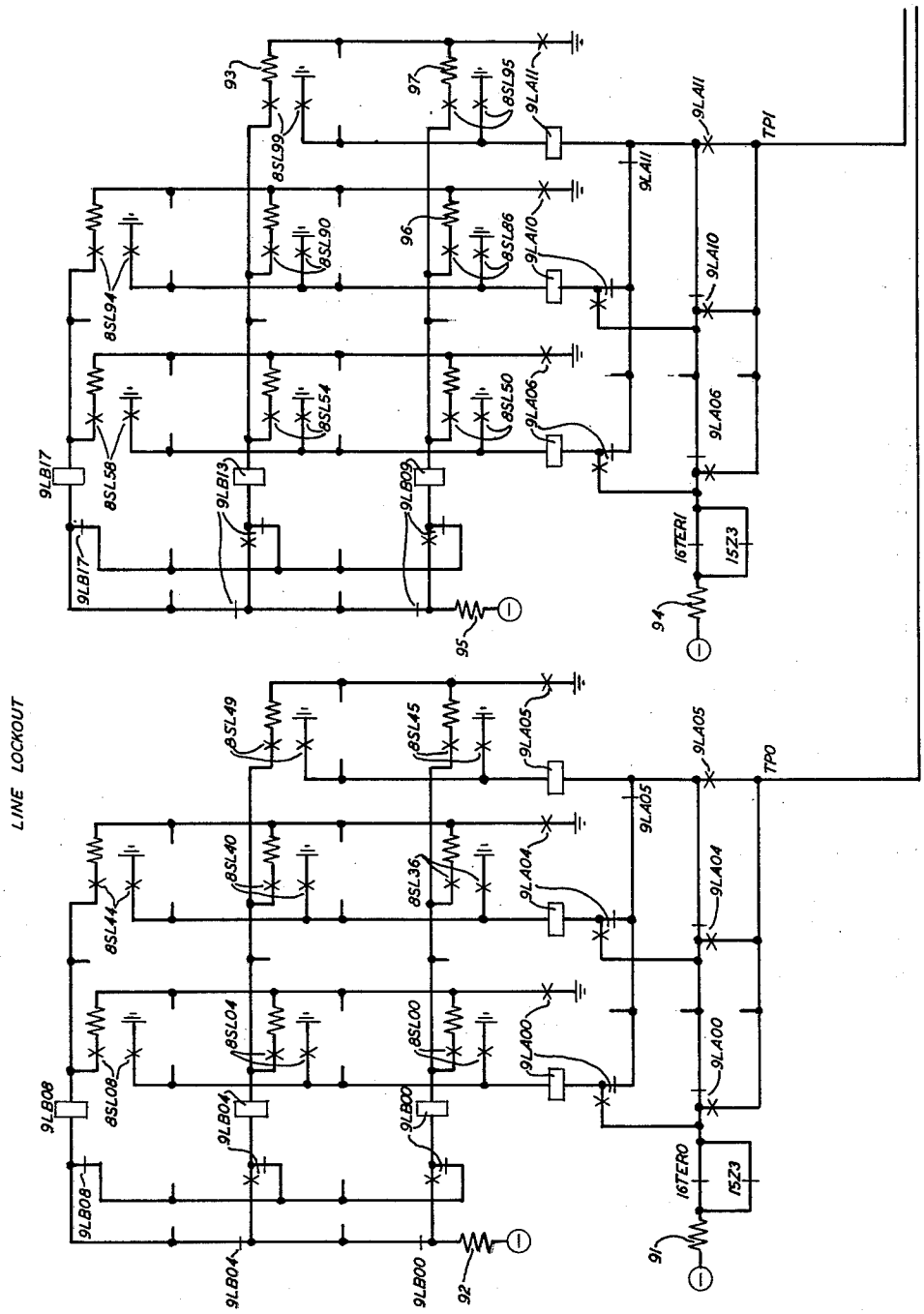

FIG. 9

INVENTORS F. E. BLOUNT
M. E. KROM
BY
S. E. Hollander
ATTORNEY

TELEPHONE LINE CONCENTRATOR

Filed Oct. 31, 1960 29 Sheets-Sheet 10

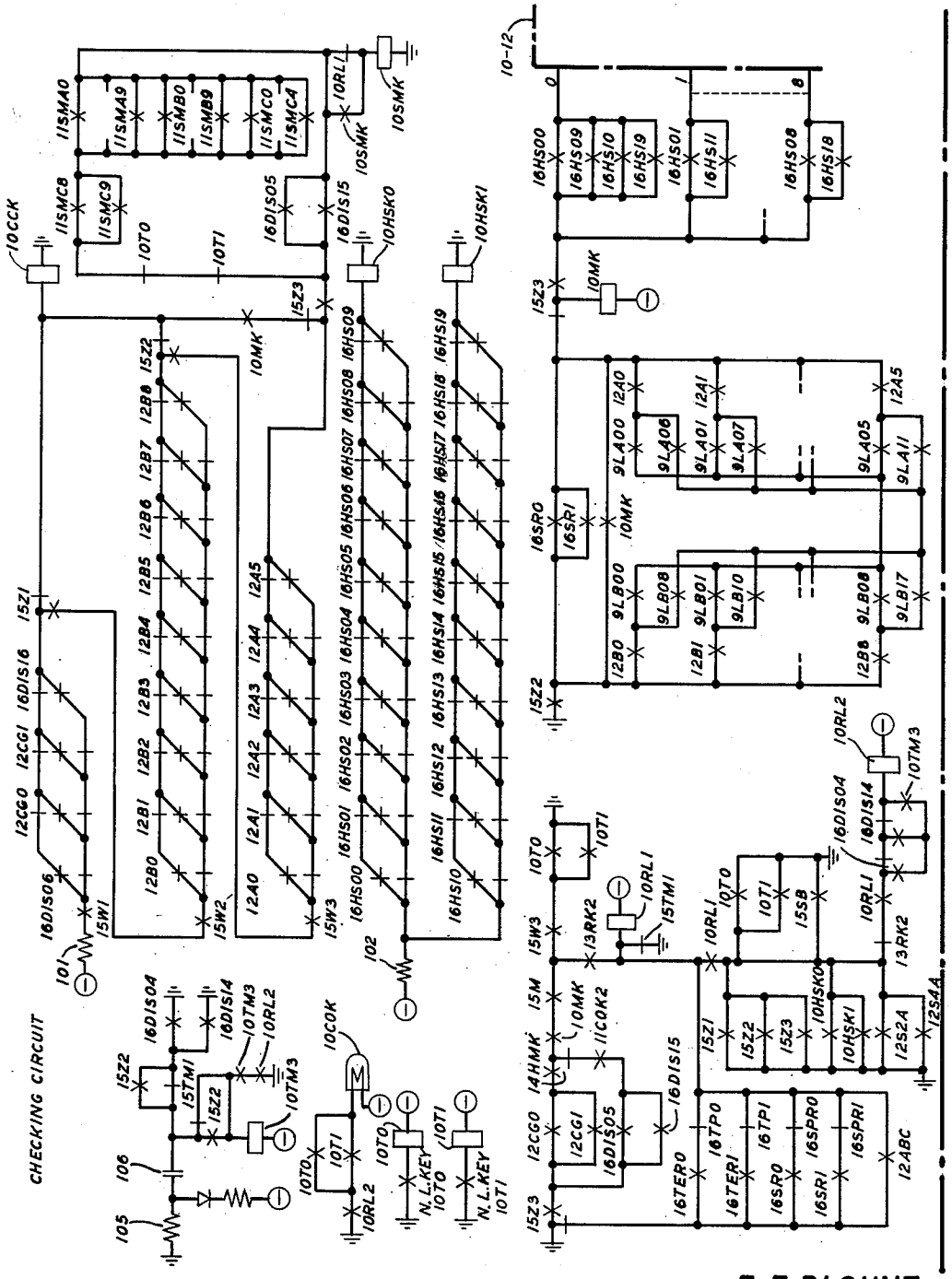

FIG. 10

INVENTORS F. E. BLOUNT
M. E. KROM

BY S E Hollander

ATTORNEY

TELEPHONE LINE CONCENTRATOR

Filed Oct. 31, 1960 29 Sheets-Sheet 11

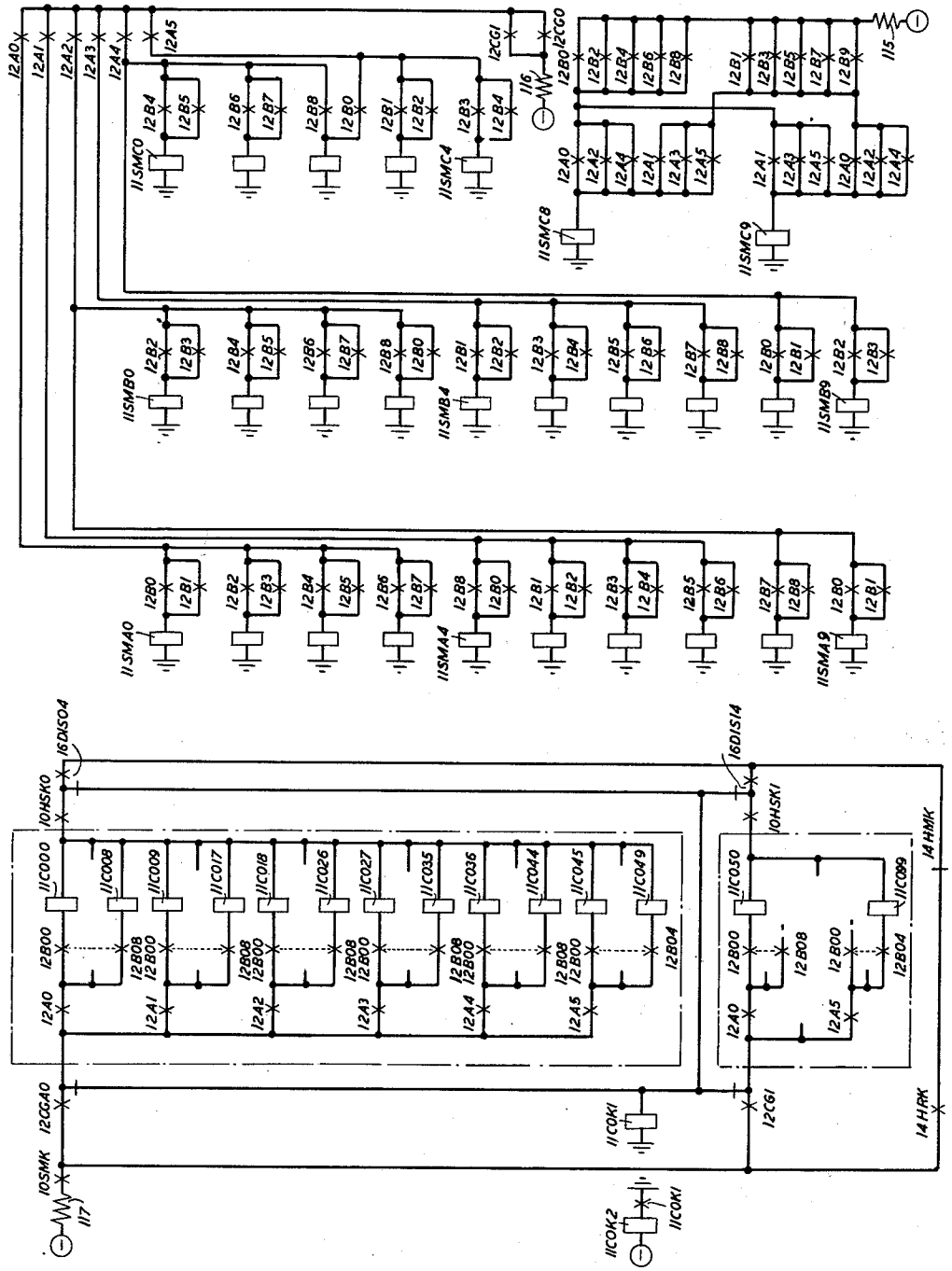

FIG. 11

INVENTORS F. E. BLOUNT
M. E. KROM
BY S. E. Hollander
ATTORNEY

TELEPHONE LINE CONCENTRATOR

Filed Oct. 31, 1960 29 Sheets-Sheet 12

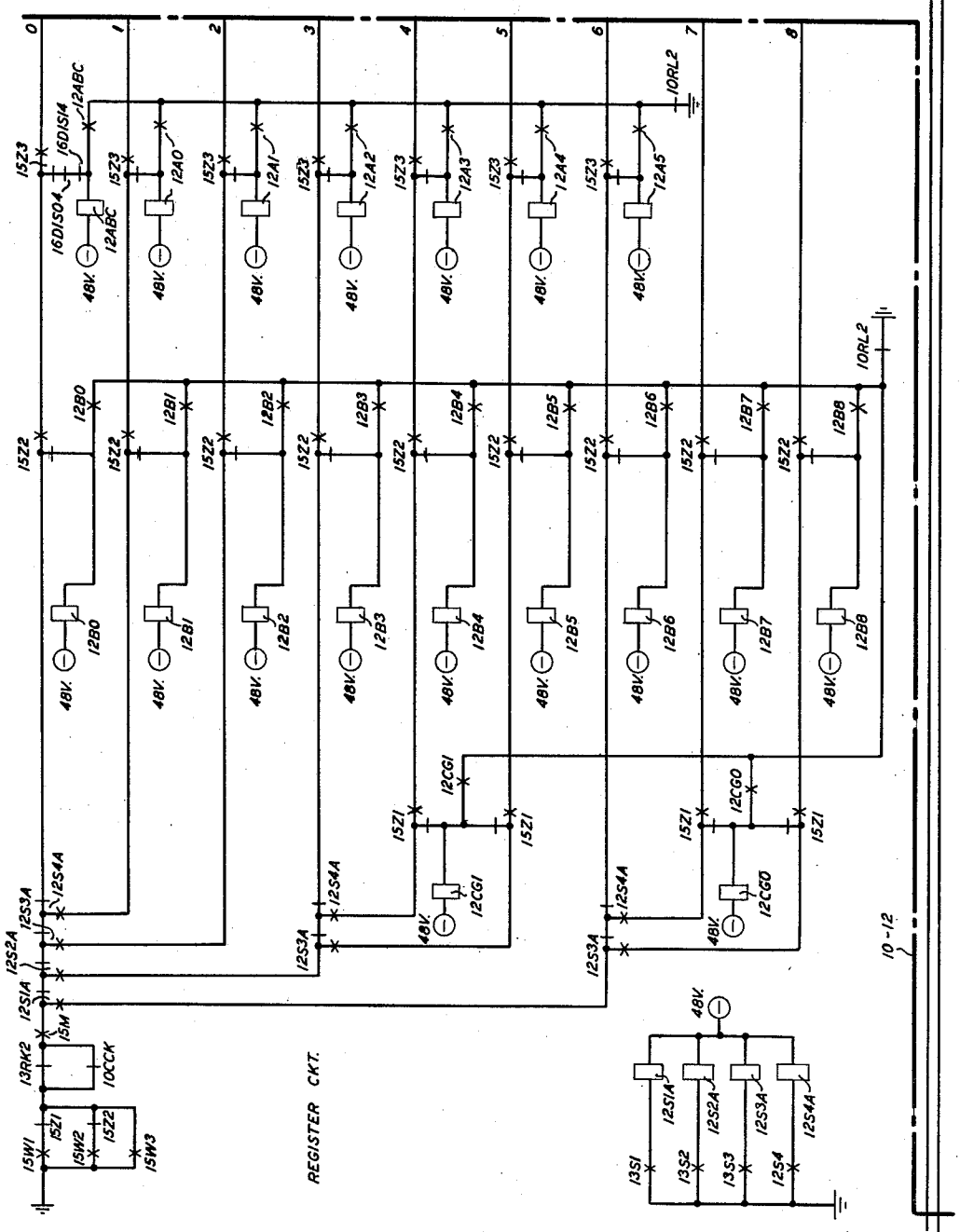

FIG. 12

INVENTORS F. E. BLOUNT
M. E. KROM
BY
S E Hollander
ATTORNEY

TELEPHONE LINE CONCENTRATOR

Filed Oct. 31, 1960 29 Sheets-Sheet 13

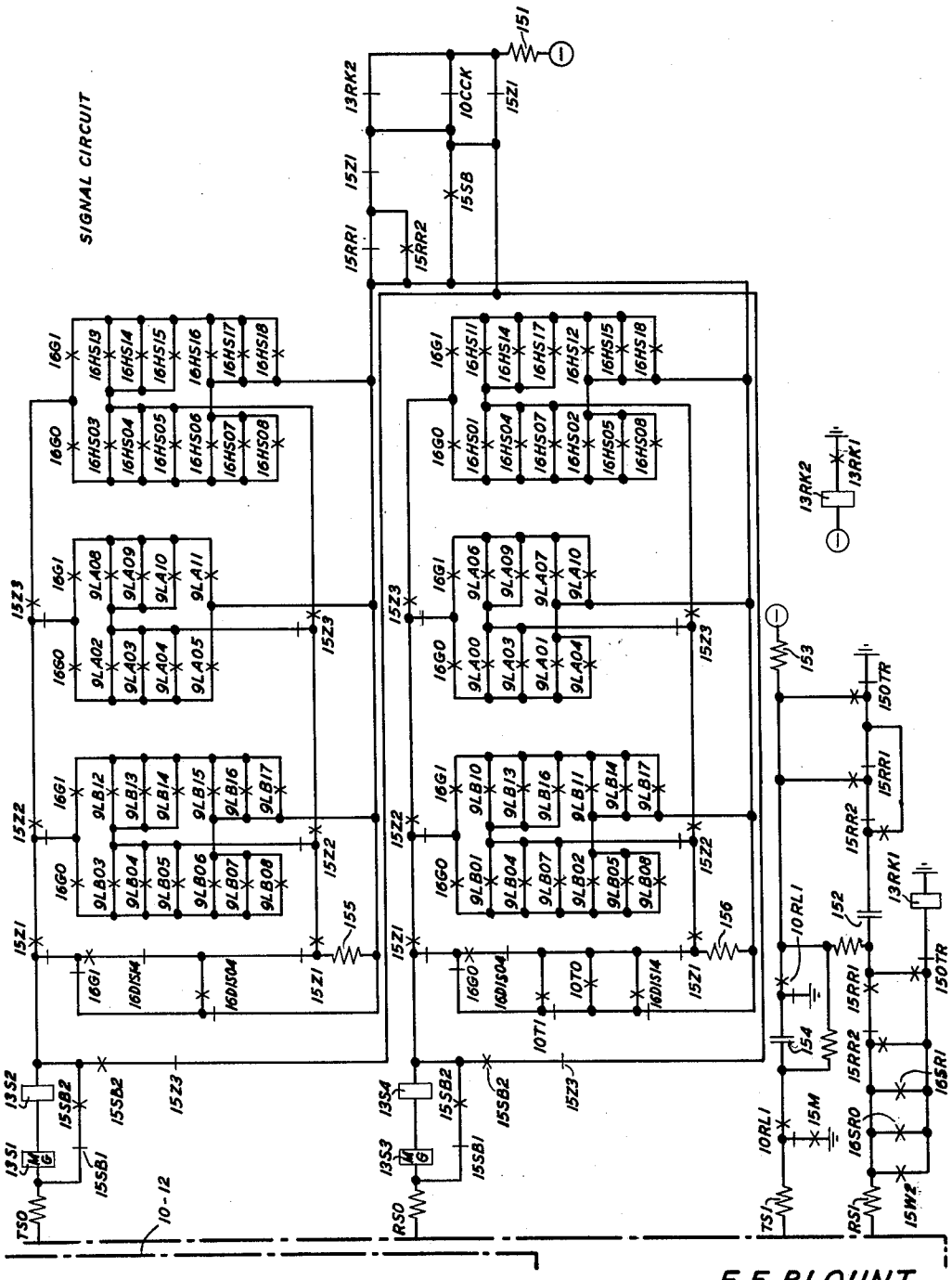

FIG. 13

INVENTORS F. E. BLOUNT
M. E. KROM
BY S. F. Holländer
ATTORNEY

TELEPHONE LINE CONCENTRATOR

Filed Oct. 31, 1960 29 Sheets-Sheet 14

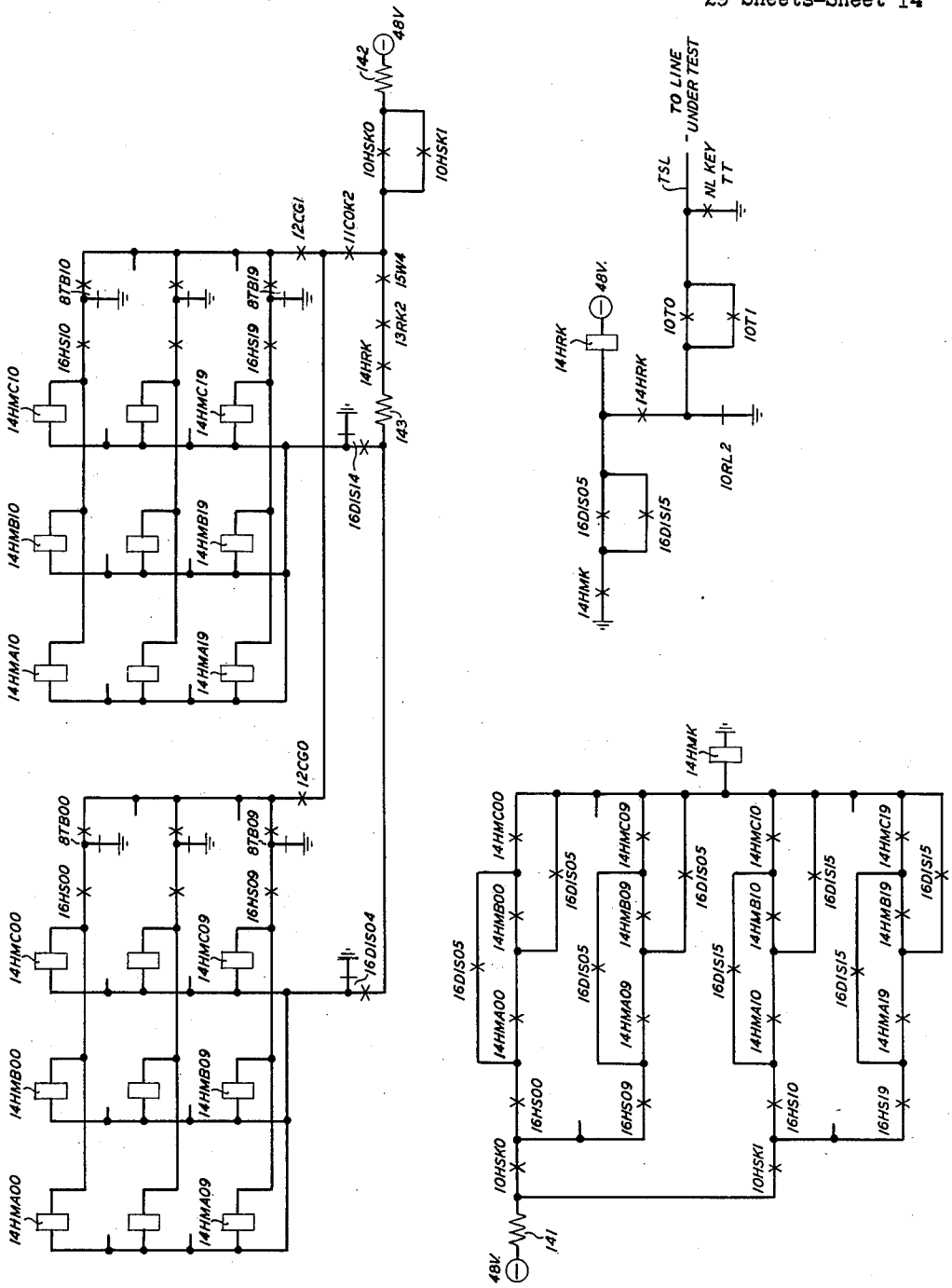

FIG. 14

INVENTORS F. E. BLOUNT
M. E. KROM
BY
S E Hollander
ATTORNEY

TELEPHONE LINE CONCENTRATOR

Filed Oct. 31, 1960 29 Sheets-Sheet 15

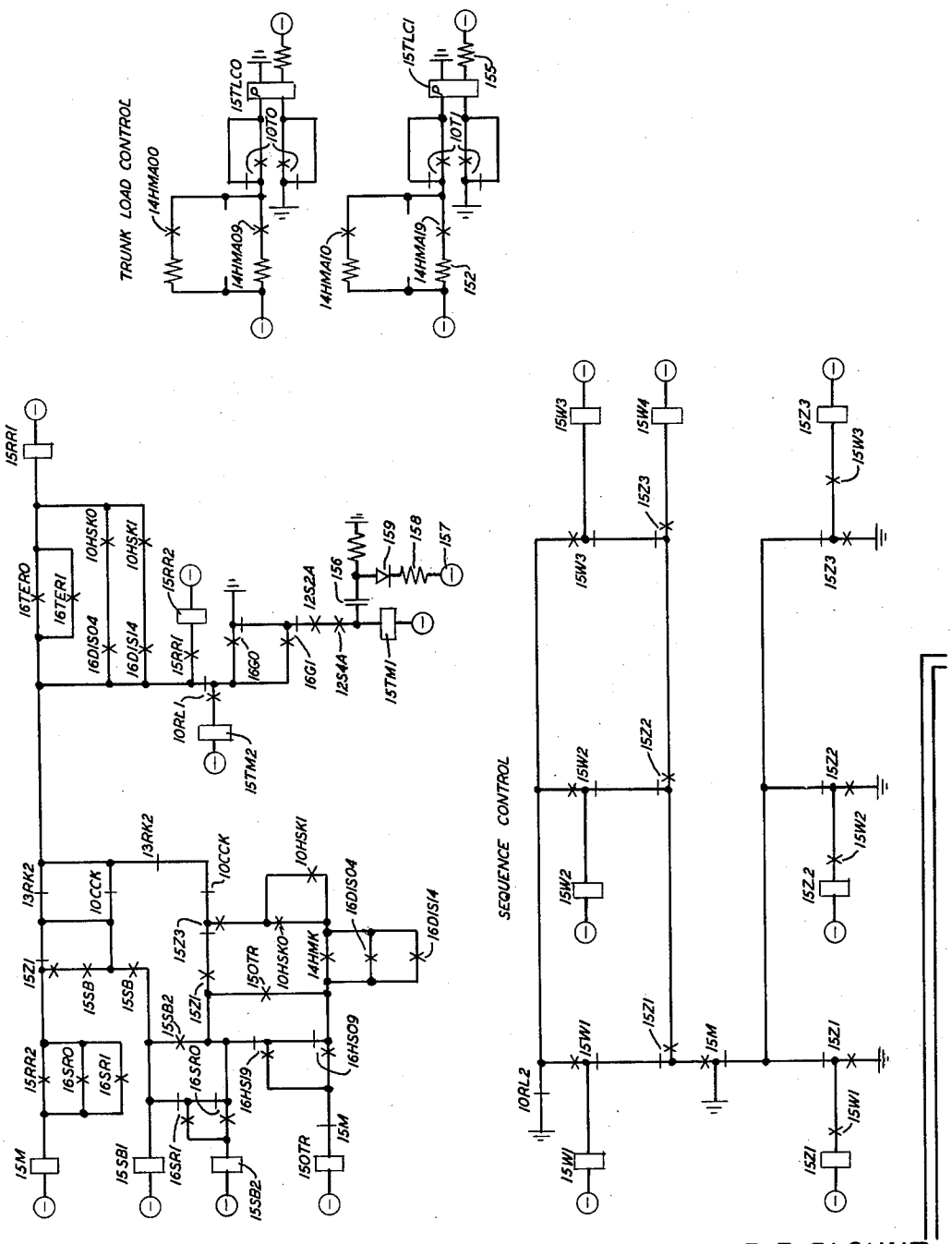

FIG. 15

INVENTORS F. E. BLOUNT
M. E. KROM
BY S. E. Hollander
ATTORNEY

TELEPHONE LINE CONCENTRATOR

Filed Oct. 31, 1960 29 Sheets-Sheet 16

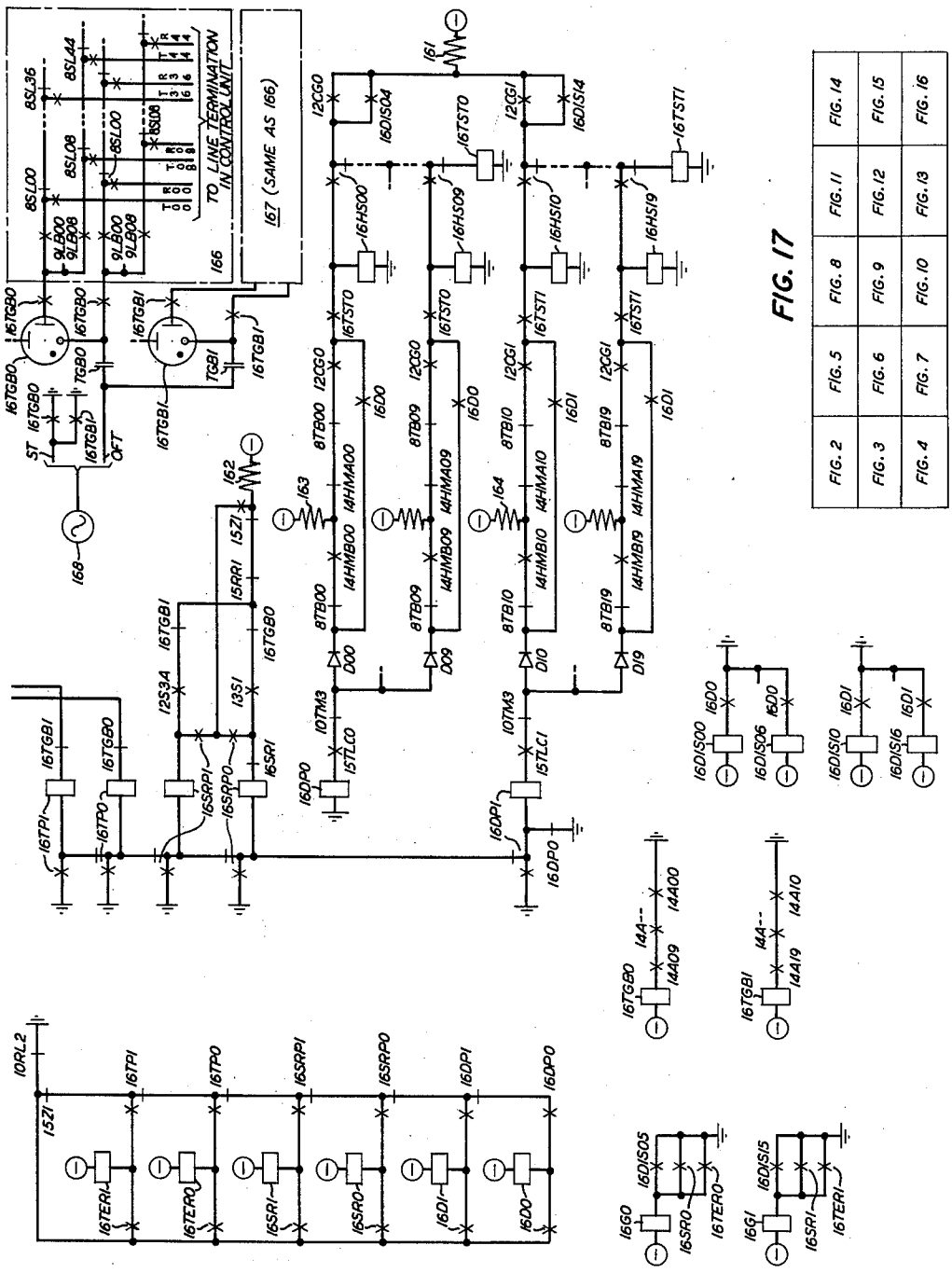

FIG. 16

INVENTORS F. E. BLOUNT
M. E. KROM
BY S. F. Hollander
ATTORNEY

TELEPHONE LINE CONCENTRATOR

Filed Oct. 31, 1960 29 Sheets-Sheet 17

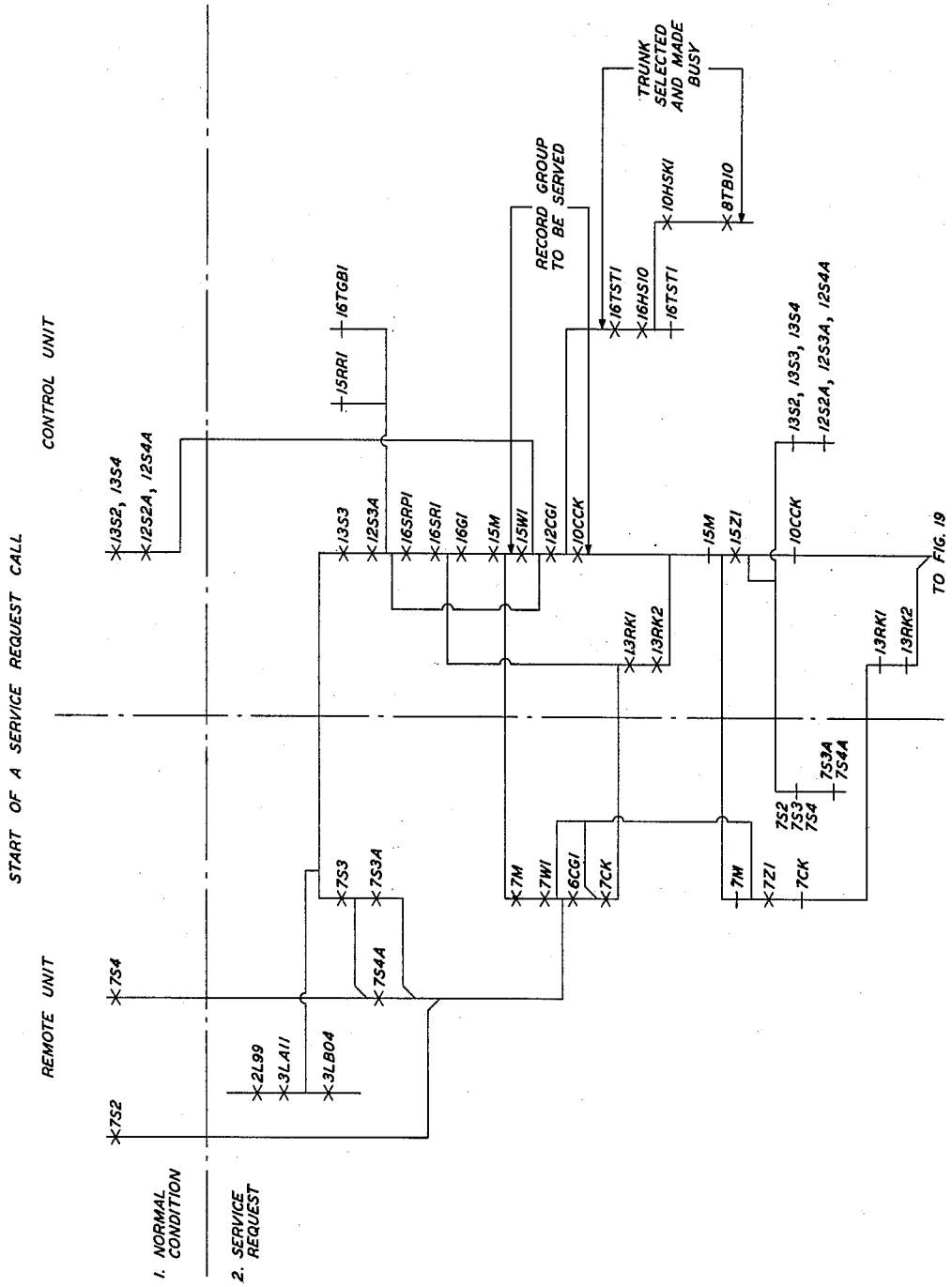

FIG. 18

INVENTORS F. E. BLOUNT
M. E. KROM
BY S E Hollander
ATTORNEY

TELEPHONE LINE CONCENTRATOR

Filed Oct. 31, 1960 29 Sheets-Sheet 18

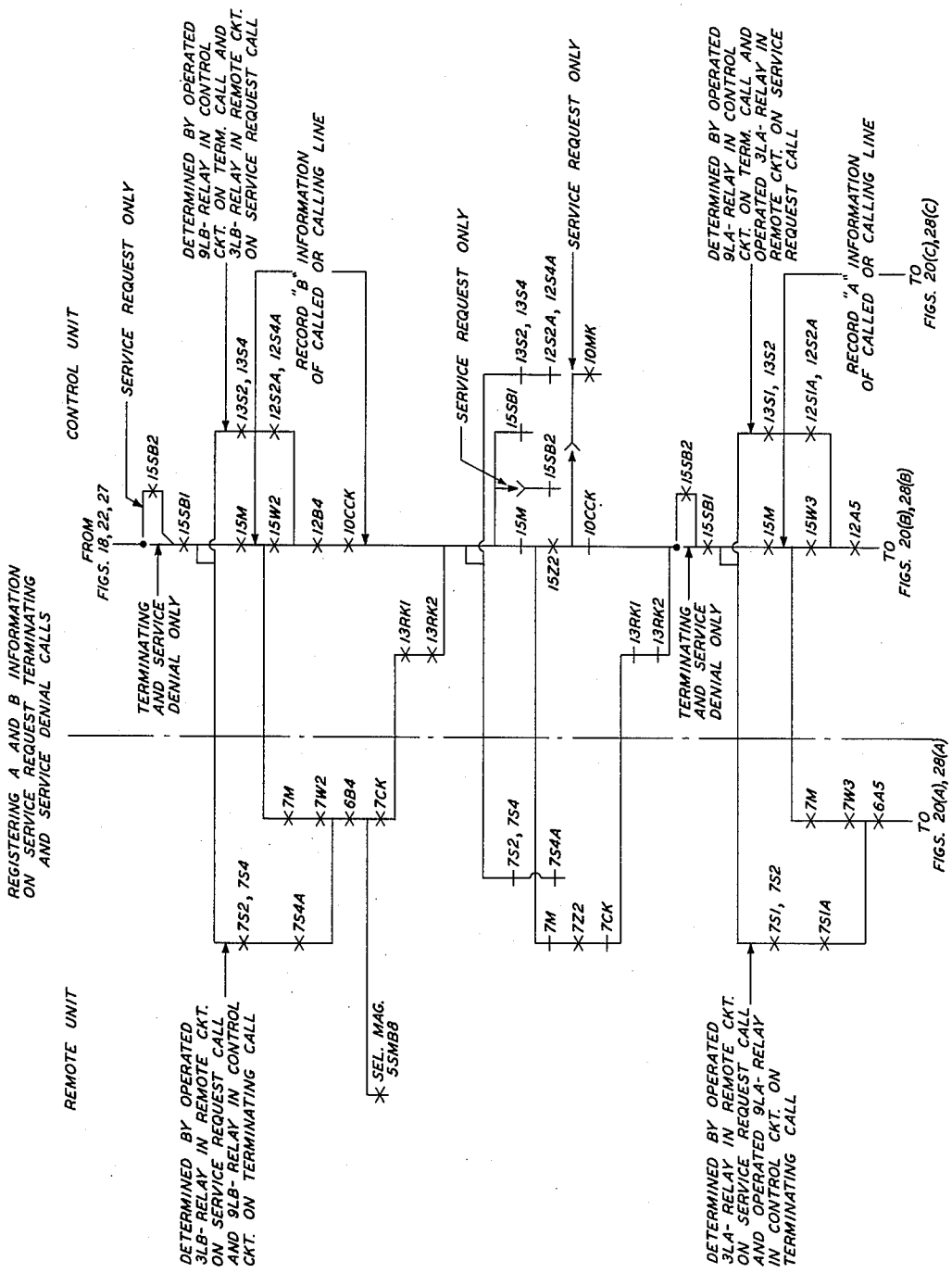

FIG. 19

INVENTORS F. E. BLOUNT
M. E. KROM
BY
S F Hollandey
ATTORNEY

TELEPHONE LINE CONCENTRATOR

Filed Oct. 31, 1960 29 Sheets-Sheet 19

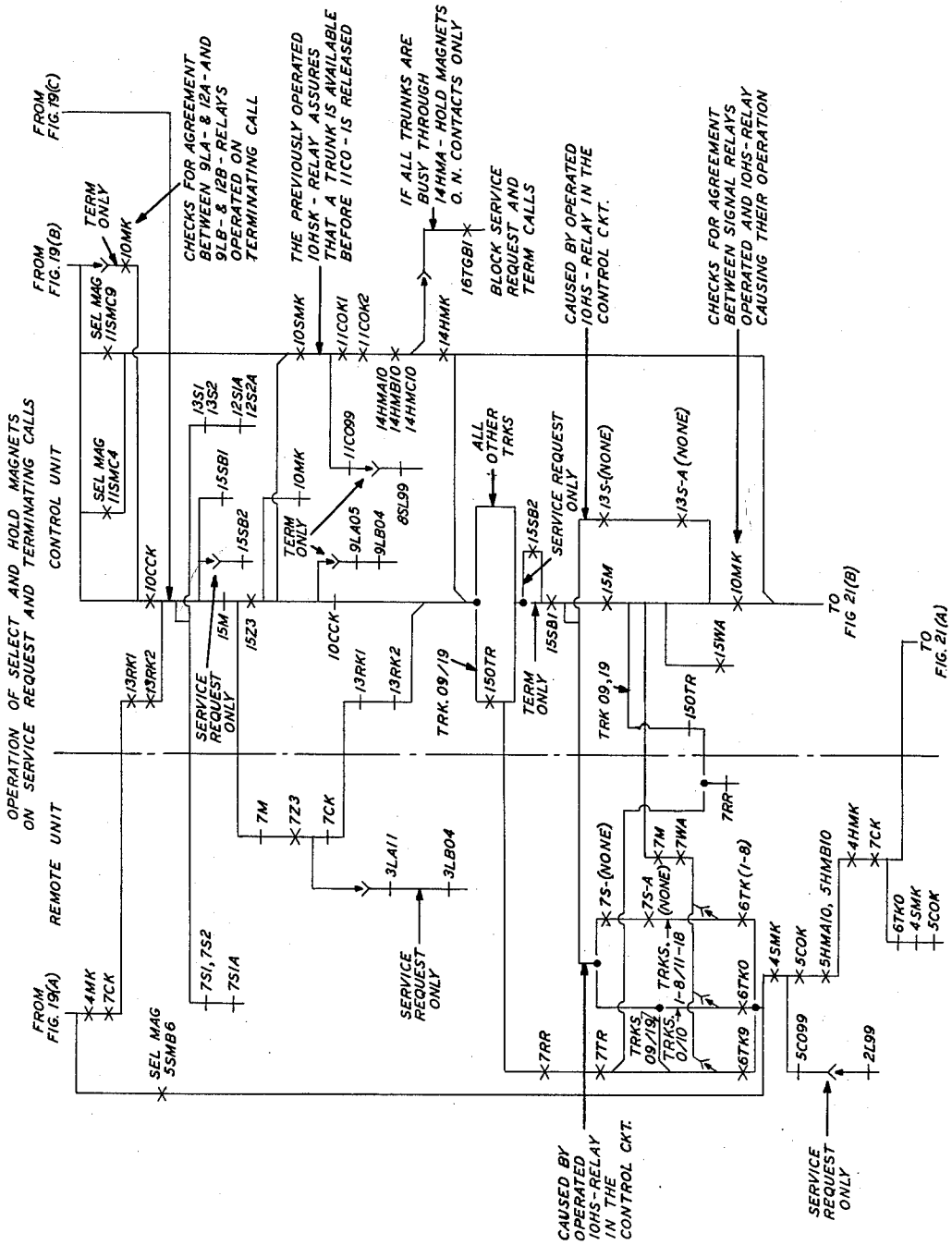

FIG. 20

INVENTORS F. E. BLOUNT
M. E. KROM
BY S E Hollander
ATTORNEY

TELEPHONE LINE CONCENTRATOR

Filed Oct. 31, 1960 29 Sheets-Sheet 20

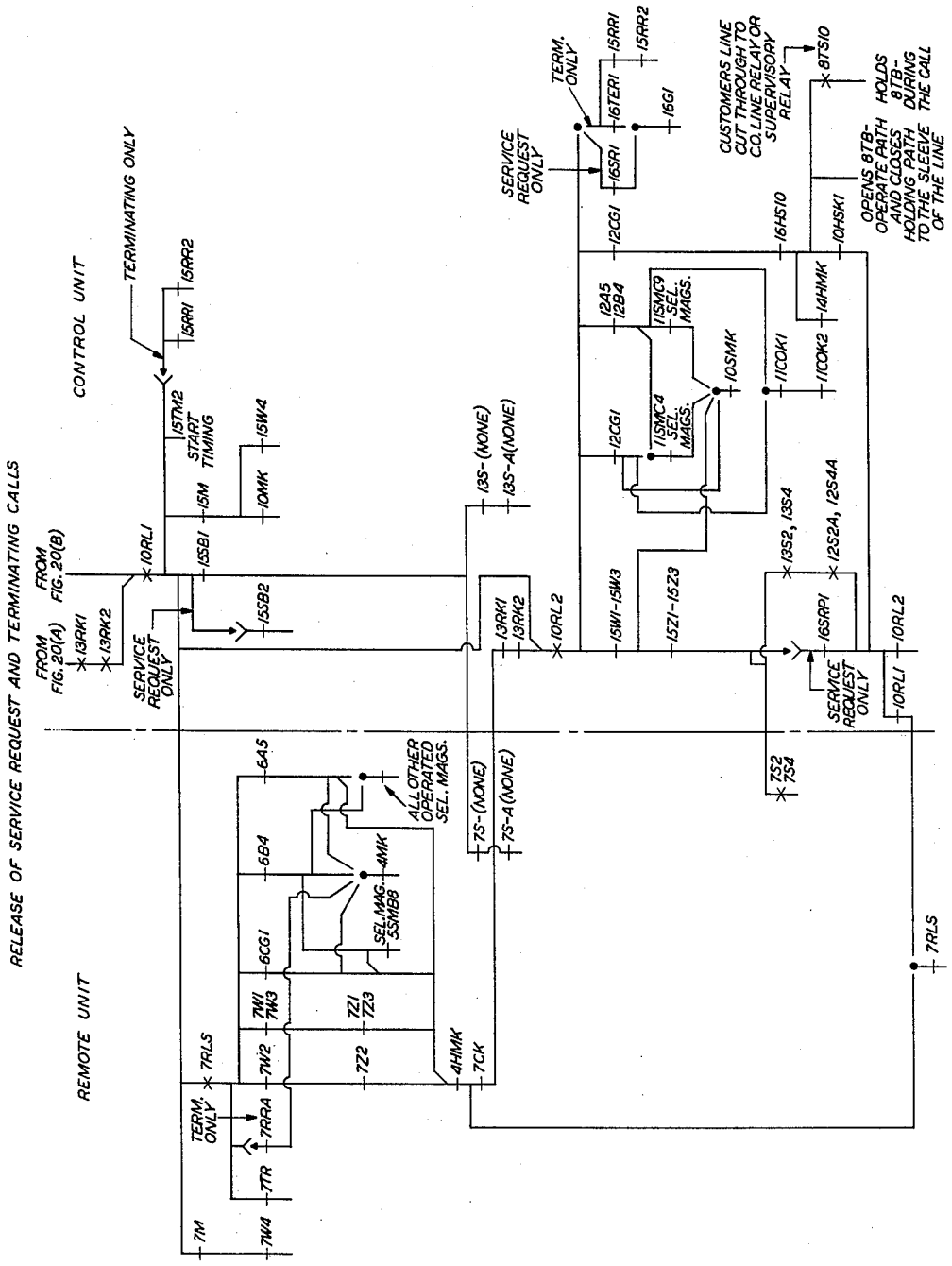

FIG. 21

INVENTORS F. E. BLOUNT
M. E. KROM
BY S E Hollander
ATTORNEY

TELEPHONE LINE CONCENTRATOR

Filed Oct. 31, 1960 29 Sheets-Sheet 21

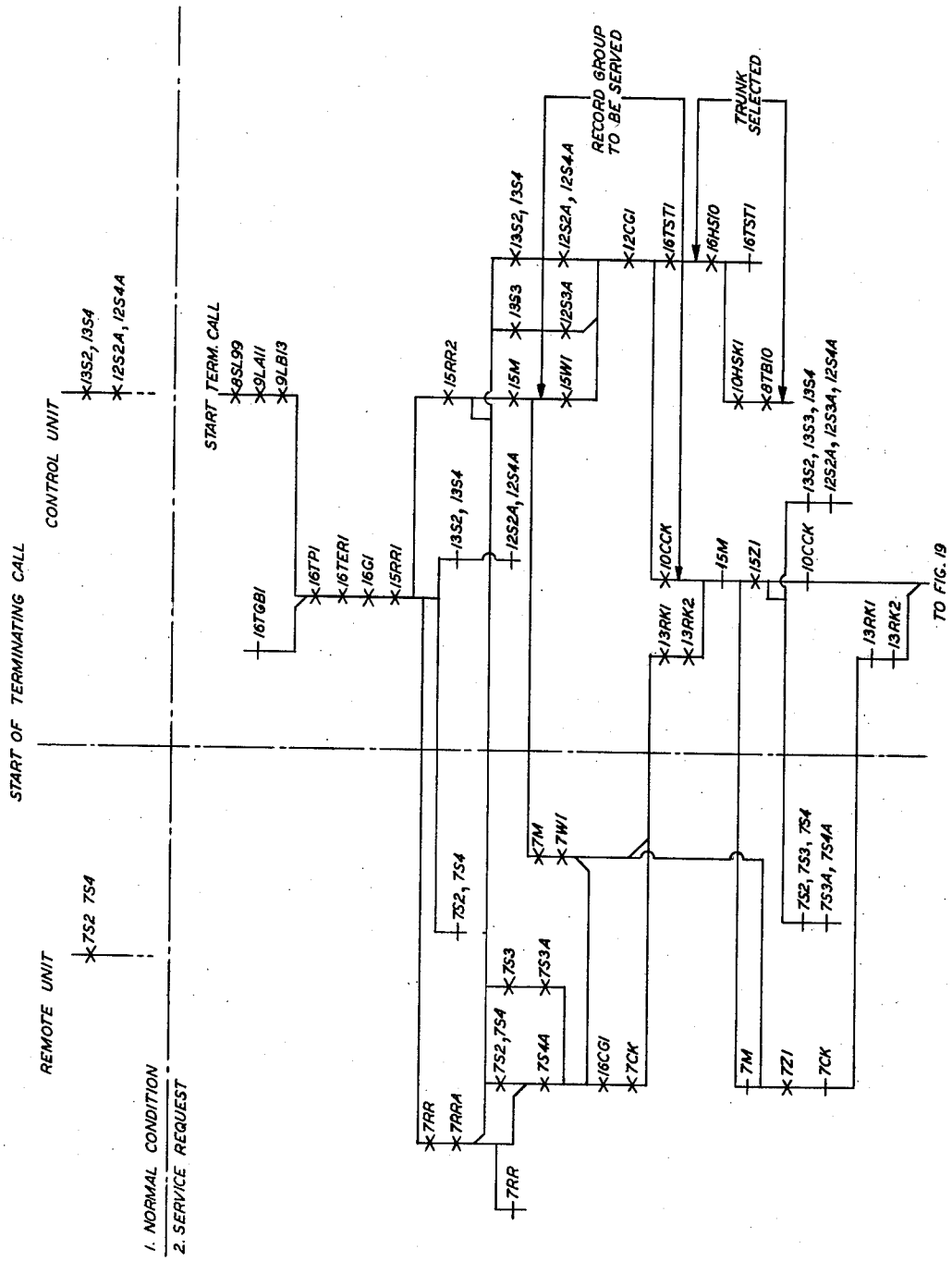

FIG. 22

INVENTORS F. E. BLOUNT
M. E. KROM
BY S. E. Hollander
ATTORNEY

TELEPHONE LINE CONCENTRATOR

Filed Oct. 31, 1960

29 Sheets-Sheet 22

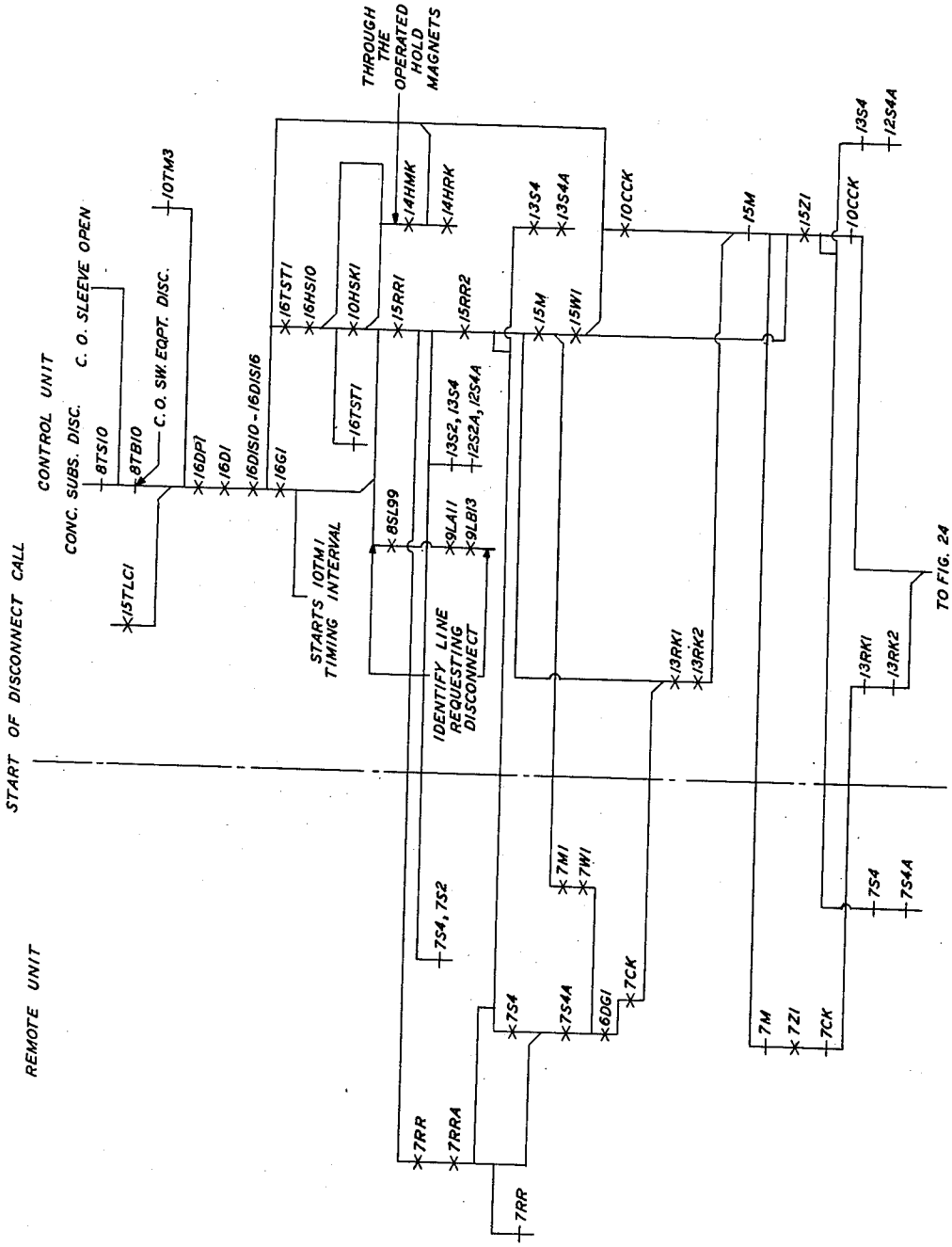

FIG. 23

INVENTORS F. E. BLOUNT
M. E. KROM
BY S E Hollander
ATTORNEY

TELEPHONE LINE CONCENTRATOR

Filed Oct. 31, 1960 29 Sheets-Sheet 23

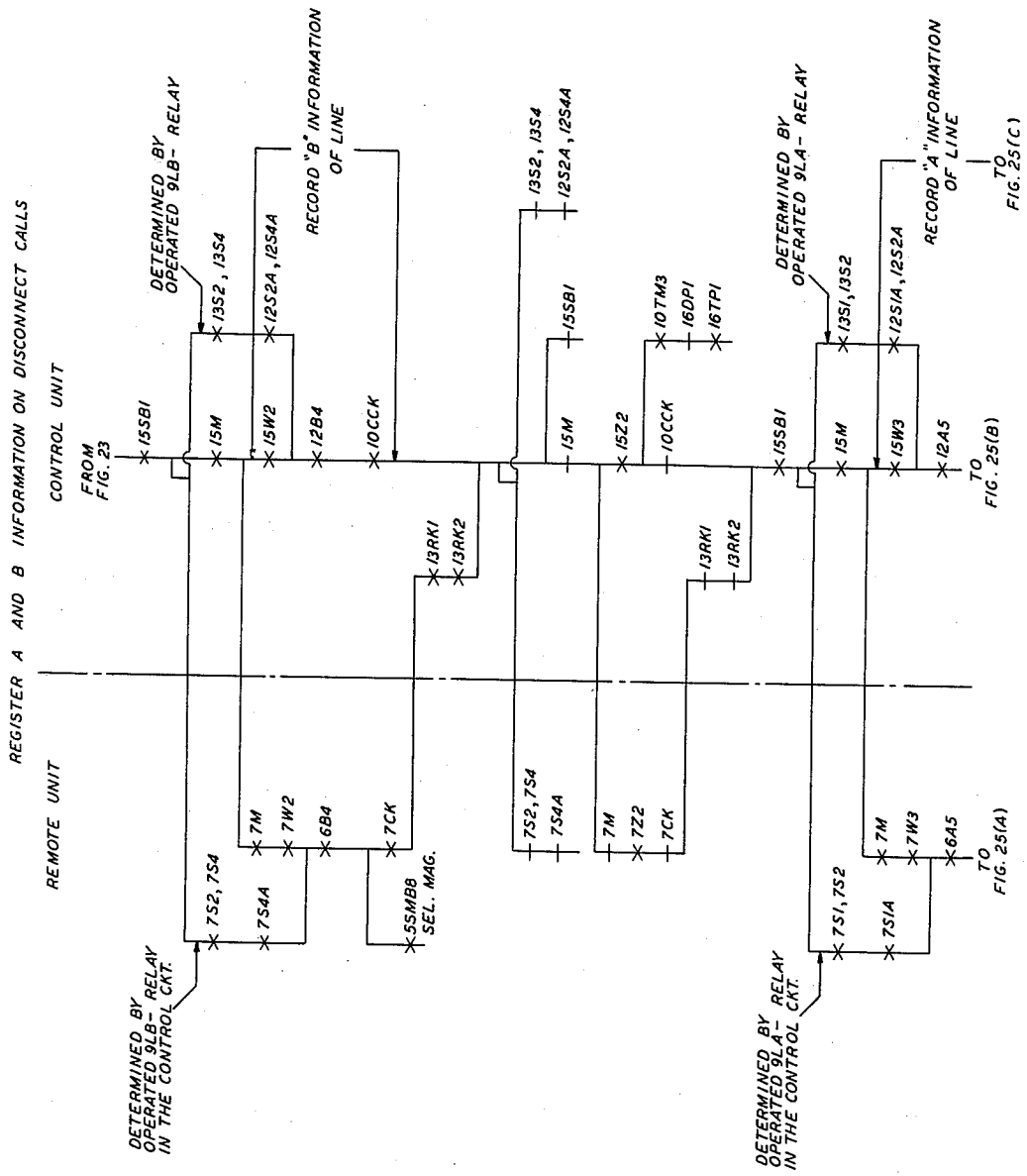

FIG. 24

INVENTORS F. E. BLOUNT
M. E. KROM
BY S E Hollander
ATTORNEY

TELEPHONE LINE CONCENTRATOR

Filed Oct. 31, 1960

29 Sheets-Sheet 24

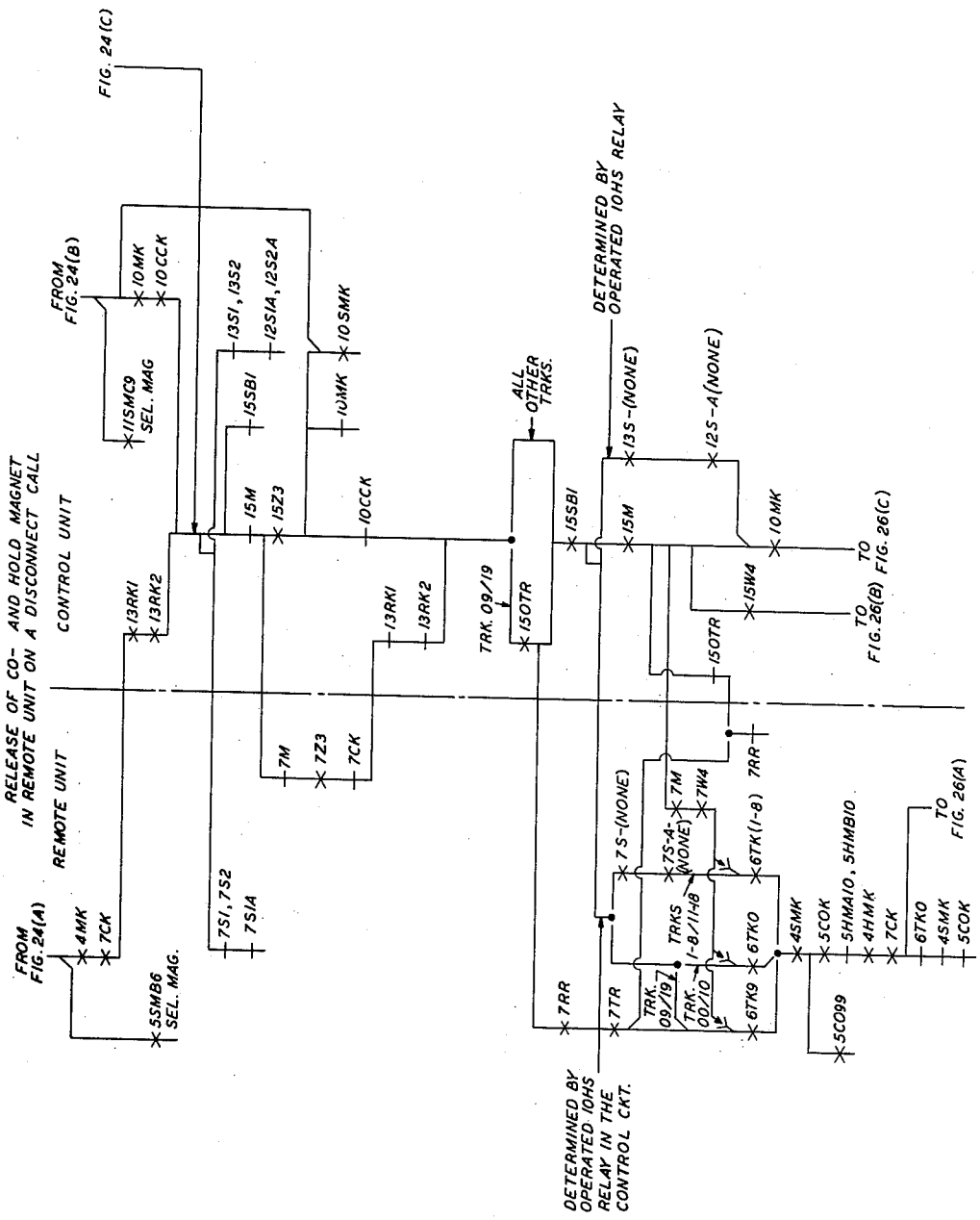

FIG. 25

INVENTORS F. E. BLOUNT
M. E. KROM
BY S E Wolfandy
ATTORNEY

TELEPHONE LINE CONCENTRATOR

Filed Oct. 31, 1960 29 Sheets-Sheet 25

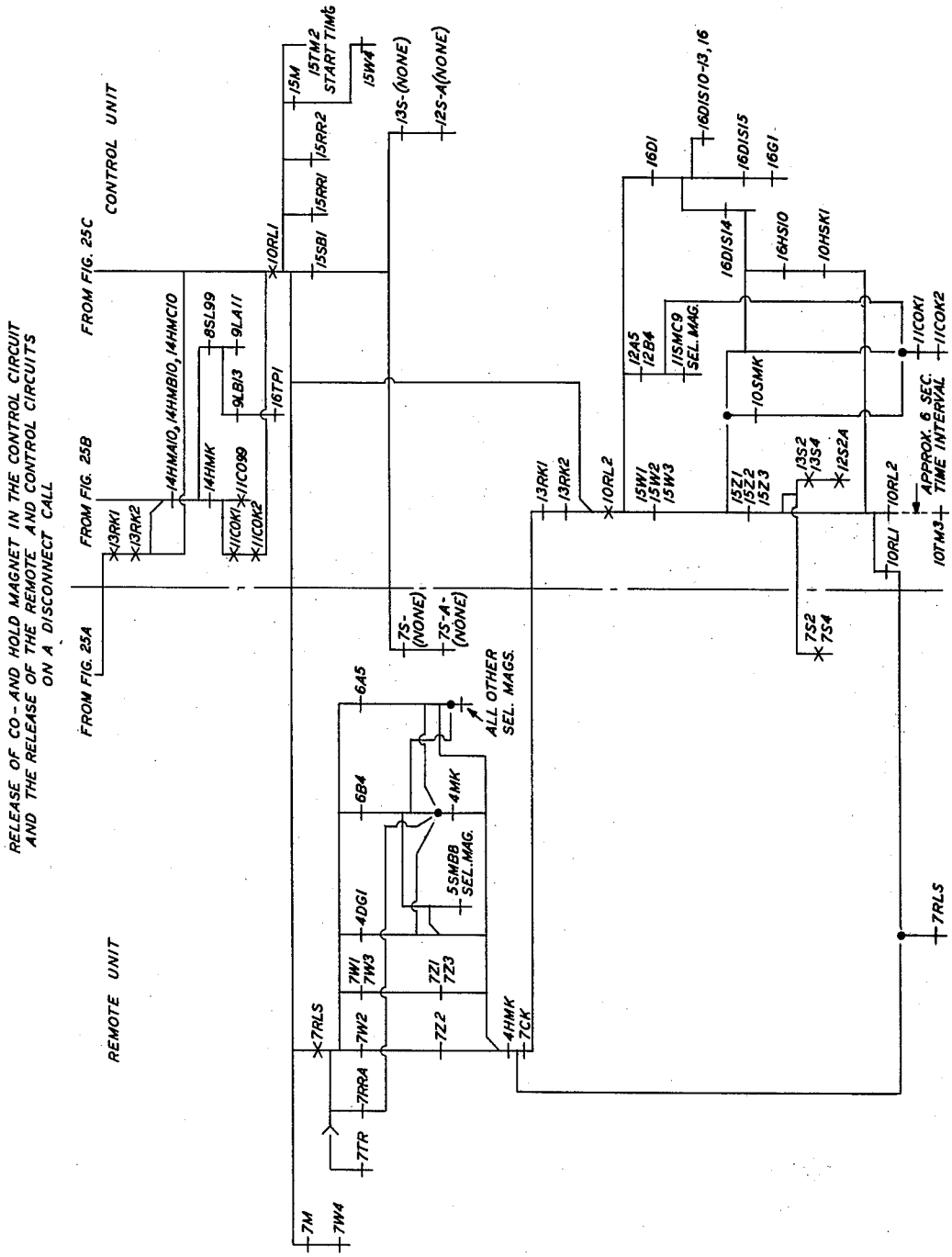

FIG. 26

INVENTORS F. E. BLOUNT
M. E. KROM
BY S E Hollander
ATTORNEY

TELEPHONE LINE CONCENTRATOR

Filed Oct. 31, 1960 29 Sheets-Sheet 26

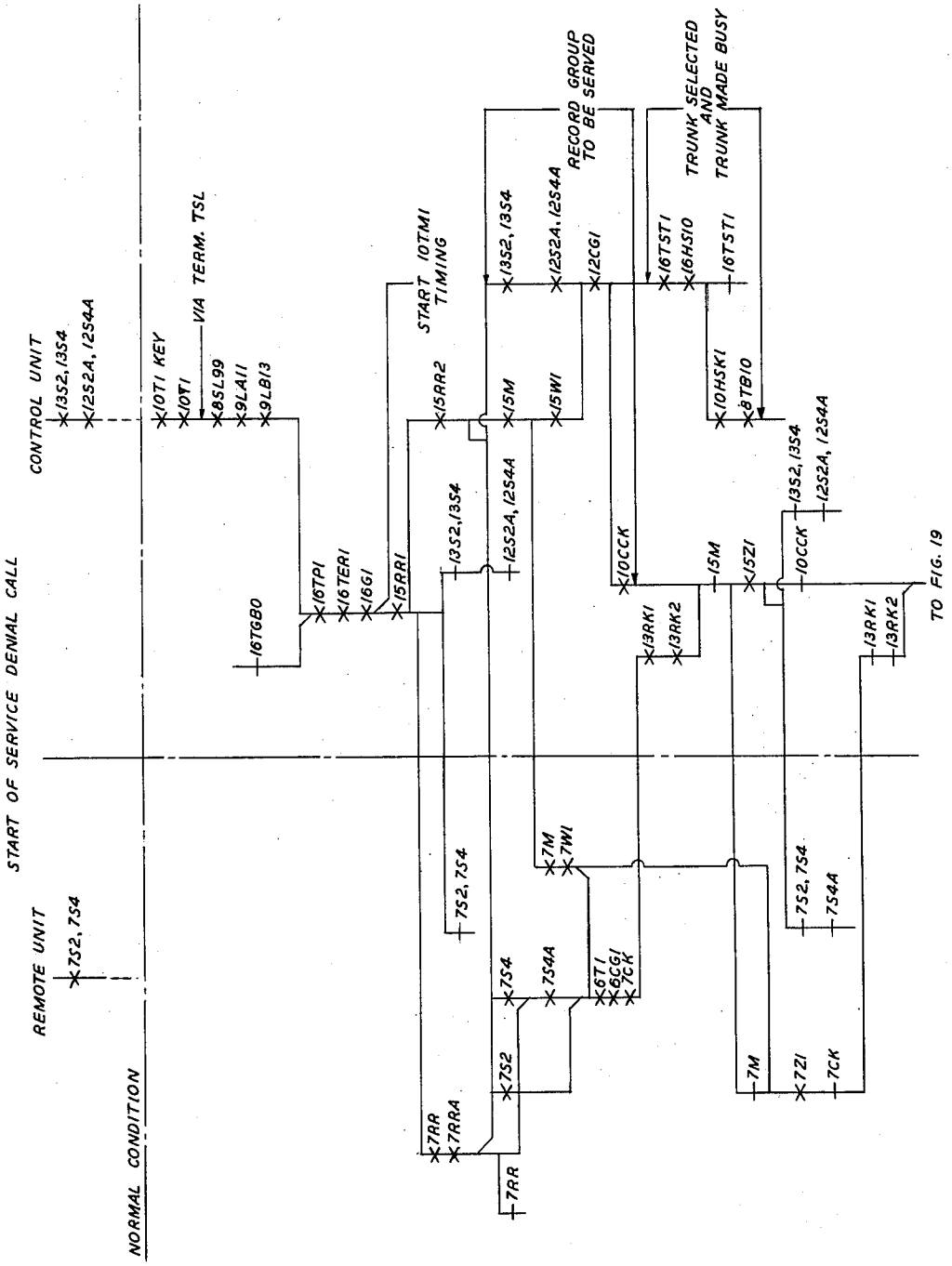

FIG. 27

INVENTORS F. E. BLOUNT
M. E. KROM
BY S E Hollander
ATTORNEY

TELEPHONE LINE CONCENTRATOR

Filed Oct. 31, 1960 29 Sheets-Sheet 27

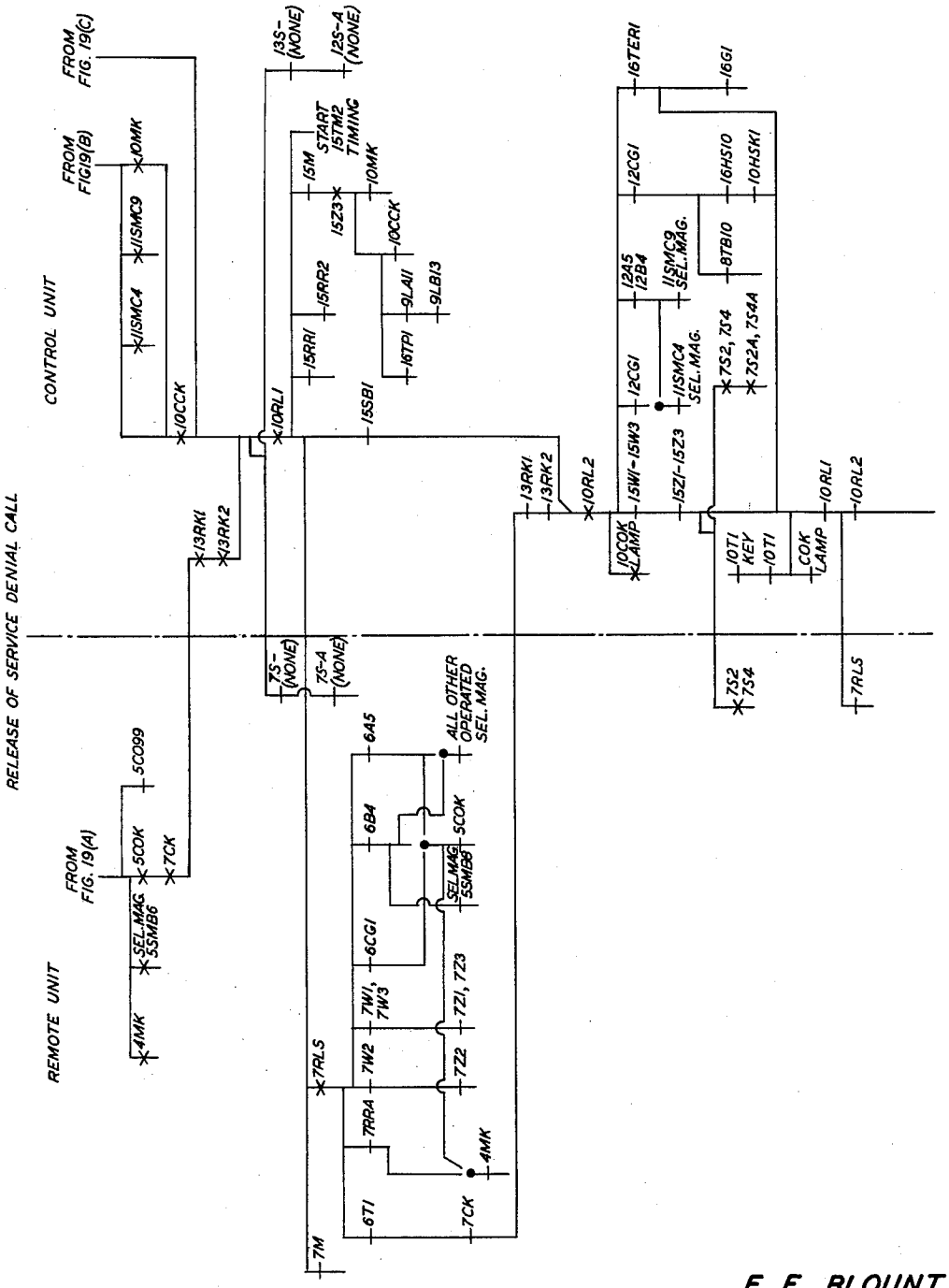

FIG. 28

INVENTORS F. E. BLOUNT
M. E. KROM
BY S E Hollander
ATTORNEY

TELEPHONE LINE CONCENTRATOR

Filed Oct. 31, 1960 29 Sheets-Sheet 28

FIG. 30

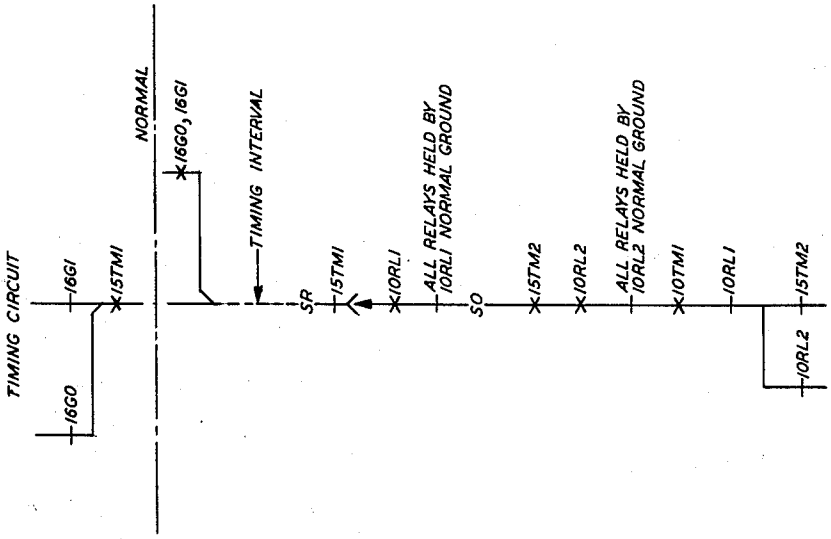

FIG. 29

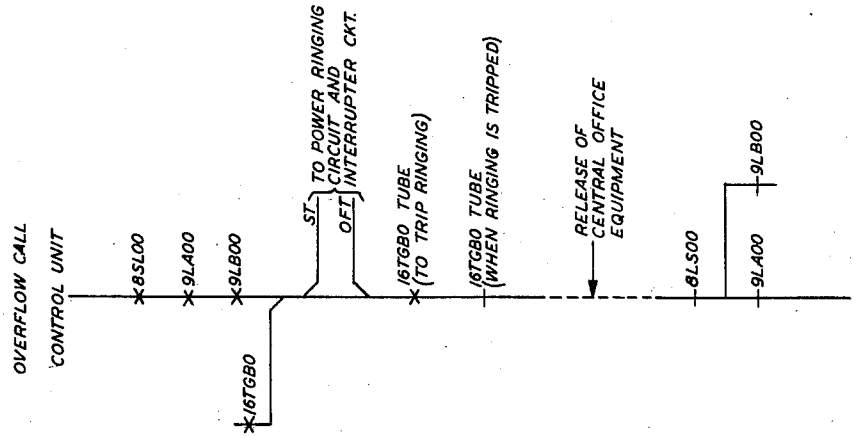

INVENTORS F. E. BLOUNT
M. E. KROM
BY S. E. Hollander
ATTORNEY

FIG. 31

TABLE

ASSOCIATION OF LINE NO. WITH LA AND LB RELAYS (REMOTE UNIT)

	G0						G1					
	3LA00	01	02	03	04	05	06	07	08	09	10	3LA11
3LB08	08	17	26	35	44		58	67	76	85	94	
07	07	16	25	34	43		57	66	75	84	93	
06	06	15	24	33	42		56	65	74	83	92	
05	05	14	23	32	41		55	64	73	82	91	
04	04	13	22	31	40	49	54	63	72	81	90	99
03	03	12	21	30	39	48	53	62	71	80	89	98
02	02	11	20	29	38	47	52	61	70	79	88	97
01	01	10	19	28	37	46	51	60	69	78	87	96
3LB00	00	09	18	27	36	45	50	59	68	77	86	95
	LINE NUMBER											

FIG. 32

TABLE 2

ASSOCIATION OF LINE NO. WITH LA AND LB RELAYS (CONTROL UNIT)

	G0						G1						
	9LA00	01	02	03	04	05	06	07	08	09	10	9LA11	
9LB08	08	17	26	35	44		58	67	76	85	94		9LB17
07	07	16	25	34	43		57	66	75	84	93		16
06	06	15	24	33	42		56	65	74	83	92		15
05	05	14	23	32	41		55	64	73	82	91		14
04	04	13	22	31	40	49	54	63	72	81	90	99	13
03	03	12	21	30	39	48	53	62	71	80	89	98	12
02	02	11	20	29	38	47	52	61	70	79	88	97	11
01	01	10	19	28	37	46	51	60	69	78	87	96	10
9LB00	00	09	18	27	36	45	50	59	68	77	86	95	9LB09
	LINE NUMBER												

FIG. 33

TABLE 3

SIGNAL RELAYS OPERATED	SEQUENCE CONTROL RELAYS OPERATED							
		-W1	-Z1	-W2	-Z2	-W3	-Z3	-W4
	CLASS OF CALL AND GROUP REG.		B INFORMATION REGISTRATION		A INFORMATION REGISTRATION		TRUNK REGISTRATION	
			-LB	-B	-LA	-A	16HS	6TK
NONE			00,09	0			00,10	0
-S4	16DIS14	6DG1	01,10	1	00,06	0	01,11	1
-S3,S4			02,11	2	01,07	1	02,12	2
-S2	16DIS04	6DG0	03,12	3	02,08	2	03,13	3
-S2,S4	KEY 10T1	-T1	04,13	4	03,09	3	04,14	4
-S2,S3,S4	-LA 06,16	-CG1	05,14	5	04,10	4	05,15	5
-S1,S2			06,15	6	05,11	5	06,16	6
-S1,S2,S4	-LA 00,05	-CG0	07,16	7			07,17	7
-S1,S2,S3,S4	KEY 10T0	-T0	08,17	8			08,18	8
NONE & 7TR							09,19	9

INVENTORS F. E. BLOUNT
M. E. KROM
BY
S E Hollander
ATTORNEY

United States Patent Office

3,133,156

Patented May 12, 1964

1

3,133,156
TELEPHONE LINE CONCENTRATOR

Frank E. Blount, Gahanna, and Myron E. Krom, Columbus, Ohio, assignors to Bell Telephone Laboratories, Incorporated, New York, N.Y., a corporation of New York

Filed Oct. 31, 1960, Ser. No. 66,319
25 Claims. (Cl. 179—18)

This invention relates to telephone line concentrators and more particularly to universal remote telephone line concentrators.

The recent history of telephone switching development has exhibited a marked increase in emphasis on facilities for telephone line concentration. In this respect line "concentration" reflects the general term which designates the connection of a relatively larger number of lines at a remote location to a relatively smaller number of trunks which are coupled to the central office. The remote location includes switching facilities for providing connections between the remote lines and the concentrator trunks. Similar facilities in universal type concentrators are provided at the central office which then "fan out," deconcentrate or re-expand the trunks into a number of line terminations equal to the number of substations which have been concentrated. These line terminations in the central office unit of the concentrator (hereinafter referred to as the control unit) are extended to corresponding and associated terminations in the central office. The latter terminations are the conventional line terminations to which the subscribers' lines would have been connected if they were in fact directly connected to the telephone central office.

At the outset it is important to observe that line concentration, as such, is not a relatively recent development. Instead, it is an outgrowth dictated, in part, by economic necessity, of a more basic but related type of concentration which dates its origin from the inception of automatic telephone central offices and indeed even before that from manual central offices.

From the brief definition of remote line concentration given above it is manifest that the striking advantage to be realized in line concentration is that it is no longer necessary to connect each and every line directly to the central office. Instead, the lines are connected on a percentage basis to the trunks when the latter are available. The availability is, of course, statistically predictable on a traffic basis. In short, a ratio of 5 to 1 of lines and trunks carries implicitly within it a very significant saving in the cost of the outside plant otherwise necessary to couple each individual line directly to the office. Since as is well known, the investment in outside telephone plant is enormous, the saving is proportionately significant.

Returning to the historical background of telephone line concentration it is apparent that concentration exists in every telephone central office either with or without so-called "remote" line concentration. Thus in a telephone central office to which lines are directly connected the equipment within the office is not available on an individual basis to each of the lines. This would be economically unfeasible. Instead, the common equipment including dial pulse registers, markers, intra-office trunks, interoffice trunks, etc. is available on a shared basis in a ratio or percentage to the number of lines based on satistical and traffic studies to insure the desired quality of service to the lines. Thus, concentration, as such, was instituted when it was decided that it would be economically unsound to individually connect each telephone line to every other telephone line. But in this type of "concentration" each line was still directly connected to the office.

With this as background perhaps the most distinctive

2

observation which may be made with regard to "remotely" concentrated telephone lines is the fact that the traditional bond of the substation line to the central office by a direct connection has been broken and instead, the entire concentrator system is now interposed between the substation line and the termination at the central office to which it would have been connected if it were directly connected to the office.

This fact of severence has in the development of line concentrators caused a number of profoundly challenging technical and economic problems.

Perhaps one of the most significant of the difficulties which arise in severing the line from its usual connection to the office is the necessity to convey information to the office regarding the identity of the line. Likewise on a terminating call information must be transmitted to the remote unit which is indicative of the identity of the line which is being called and the trunk which has been selected to extend the call to the remote unit, etc. In fact, the ability to accurately and rapidly transmit information concerning the identity of the call or calling line is crucial to the successful operation of the concentrator. It is, therefore, essential to provide facilities for insuring the accuracy with which the lines are being identified and the identification is being transmitted from the remote unit to the control unit and vice versa. This particular aspect of the operation of line concentrators has assumed such significant proportions that the technology required to perform the necessary signaling and checking has continued to mount in complexity and expense.

All of these problems are compounded by the fact that identification of lines and transmission of the identification can, in certain instances, be adversely affected by the occurrence of a plurality of simultaneous calls. Thus, for example, if lines 34 and 48 were simultaneously originating service request calls, it is urgent that the invalid identification 38 be avoided. This necessity is made even more critical by the fact that the central office, in view of its severance from the line, must rely on the information transmitted thereto in order to establish the line identification. In short, having no direct connection to the line to verify the accuracy of the identification, the central office and in particular the control unit of the line concentrator at the central office must accept the information transmitted from the remote unit. An analogous (but reversed) reliance is in effect on calls from the central office to the substation, i.e., terminating calls.

In view of this type of dependency with regard to identification of lines, the necessity for accuracy is commensurately heightened. As a result, increasing emphasis has been placed on facilities for checking the validity and accuracy of line identification and the transmission of that information—but this as a paradoxical situation. In fact, it is a self-defeative one. Viewed in the background discaused above, it is apparent that this problem is not present when lines are directly connected to the telephone office. Since it is a difficulty which has been introduced as a result of telephone line concentration and since line concentration is itself rooted deeply in the economic advantages thereof, it is seen that to the extent that a complete ancillary technology is necessary for checking and verification of line identity, the savings incurred through remote line concentration are proportionally diminished. In short, if the economic advantages derived from remote line concentration are materially jeopardized as a result of the increased expenditures necessary for safeguarding the validity of identification, the exploitation of telephone line concentration, despite its obvious technical superiority, may be curtailed.

It is, therefore, an object of this invention to provide for insuring the validity of the identification of telephone lines in a universal remote concentrator system.

Still another object of this invention is the prevention of ambiguity of identification when a plurality of lines simultaneously originate calls.

Another object of this invention is to provide complementary line identification facilities at a remote unit and control unit of a telephone line concentrator.

A further object of this invention is to provide identification facilities which preclude ambiguous identifications by preventing more than one of a group of identification relays from operating at the same time.

Still another object of this invention is to provide identification of lines and concentrator systems in which preference is accorded the identification of selected lines.

These and other objects and features of the invention are achieved in an arrangement which employs a universal line concentrator having a remote unit to which the substation lines are connected. A relatively smaller number of concentrator trunks couple the remote unit to a corresponding control unit located at the central office.

Basically the remote unit is designed to provide a convergence of a larger number of substation lines to a smaller number of concentrator trunks through a crossbar switching network.

The control unit at the central office is in effect a mirror image of the remote unit and provides for divergence (re-expansion or deconcentration) whereby the relatively smaller number of concentrator trunks are adapted to be switched through a crossbar network to a number of line terminations in the control unit indicidual to the substation lines. These terminations in the control unit are then individually extended to an equal number of terminations in the central office. The last-mentioned terminations are the existing conventional telephone line circuits to which the line would be connected if, in fact, direct connections were made to each line instead of connections through the concentrator. In the instant arrangement each line is provided with a line relay at the remote unit and a cut-off relay at the remote unit.

In addition, each line includes at the control unit a sleeve relay and cut-off relay individual to the line.

On an originating call the line relay at the remote unit is adapted to operate in a manner similar to that of the conventional line relay in the central office. Since the line relay at the remote unit is unique to the subscriber's line the identification of the line begins with this information. In an illustrative embodiment, individual connections are made to the line relays in the remote unit by a circuit which includes groups of relays operable in coded combinations to reflect the identification of the line.

Significantly the interrelation of these groups of relays is determined by a circuit arrangement which provides preference and lockout in order to preclude invalid identifications. In addition, the identification facilities are so constructed that comprehensive but simple checking procedures are made possible.

Typically when the calling station goes off-hook, as indicated above, the line relay is operated and a pair of identification relays are in turn operated. The latter pair of relays uniquely identify the line and in turn operate various signal relays to reflect the coded combination of identification relays. The signal relays are utilized to transmit the identification information to the distant unit in a manner to be explained herein and also cause registration of the information in appropriate storage equipment at the control unit and at the remote unit.

To illustrate the functioning of the invention during a simultaneous calling condition by a number of substations, it may be assumed that simultaneous terminating calls have been initiated to substations 50 and 94. In the illustrative embodiment a first group of "LA" relays represents a portion of the information indicating each line and the second group of "LB" relays represents the remainder of the information designating a particular line. Thus, in the assumed illustration a particular LA relay, specifically relay LA06, will operate to indicate line 50 and a particular "B" relay, specifically relay LB00, will operate to complete the information for identifying line 50. At this time if the LA relay (LA10) associated with line 94 attempts to operate it will be precluded from doing so by a lockout chain including the contacts of higher preferred relay LA06.

Moreover, the LB relays have contacts of the LA relays in series therewith and therefore cannot operate until the associated LA relay has operated. Thus, the LB relay associated with line 94 cannot under any circumstances operate since the LA relay associated with line 94 cannot operate.

In the rare situation in which both LA relays, LA06 and LA10, operate precisely simultaneously, the less-preferred relay LA10 will ultimately release in favor of relay LA06.

On the other hand, if two lines in the same LA relay group (LA06), for example, lines 50 adn 54 request service simultaneously, the correct line identification must be made since the operation of any LB relay will prevent the operation of all other LB relays. As a result, the relay LA06 associated with lines 50 and 54 will operate and the LB relays associated with the same lines will both attempt to operate. Whichever relay operates first will lock out the other. However, since both identifications 50 and 54 represent equally legitimate service requests, a correct identification has been made. If both LB relays operate precisely simultaneously the less-prefererd relay (that associated with line 54) will release in favor of the higher preferred LB relay (that associated with line 50).

In the illustrative embodiment there are twelve LA relays, each of which has nine LB relays associated therewith. Reference may be made to Tables 1 and 2 to observe the relationship between the LA and LB relays.

In response to the successful completion of all the identification operations, the signal information is loaded in the registers in the remote unit and control unit, and appropriate select and hold magnets are operated in the crossbar networks at the remote unit and the control unit to connect the line through the concentrator to its corresponding line termination in the central office.

A feature of the invention is an identification arrangement for identifying lines on simultaneous originating and terminating calls without ambiguity.

Another feature of the invention includes facilities for preventing an invalid or spurious identification.

Still another feature of this invention includes a plurality of groups of relays operable in coded combinations to reflect different identifications.

Yet another feature of this invention includes groups of relays arranged to preclude operation of more than one relay in any given instance.

Still another feature of this invention includes groups of identification relays arranged in bidirectional lockout order.

Yet another feature of this invention includes identification facilities in which preference is accorded the identification of particular lines.

These and other objects and features of the invention may be more readily comprehended from the following detailed description, appended claims and attached drawing in which:

FIG. 1 shows a block diagram of the major components at the remote and central office locations;

FIG. 2 shows the crossbar network at the remote location;

FIG. 3 includes the line lockout and identification circuits at the remote location;

FIG. 4 indicates the checking circuit at the remote location;

FIG. 5 includes the cut-off relays and the select and hold magnets for the crossbar network at the remote location;

FIG. 6 shows the remote unit register circuit;

FIG. 7 includes the remote unit sequence control circuit and the remote unit signal circuit;

FIG. 8 includes the crossbar network at the control unit;

FIG. 9 shows the identification and lockout relays at the central office control unit;

FIG. 10 indicates the checking circuit at the central office;

FIG. 11 shows the cut-off relays and the select magnets for the crossbar network at the control unit;

FIG. 12 includes the register circuit at the control unit;

FIG. 13 shows the signal circuit at the control unit;

FIG. 14 includes the hold magnets associated with the crossbar network at the control unit;

FIG. 15 includes the master signal control circuit and the trunk load control circuit and the sequence control circuit at the control unit;

FIG. 16 includes the preference control circuit at the remote unit;

FIG. 17 shows the disposition of FIGS. 2–16 to disclose the illustrative embodiment of the instant invention;

FIGS. 18 through 30 show the sequence charts for relay operation on the various types of calls;

FIG. 31 shows Table 1 which includes the relationship between the line lockout relays and the register relays at the remote unit;

FIG. 32 shows Table 2 which includes the relationship between the line lockout relays and the register relays at the control unit; and

FIG. 33 shows Table 3 which includes the relationship between the signal relays and line lockout relays.

For facilitating clarity of presentation the following General Description and Detailed Description have been arranged to first generally describe the apparatus and operation and to subsequently describe the operation in detail as follows:

INDEX

I. General Description
- IA. General Description of Major Components
  - IA–1. Crosspoint Networks
  - IA–2. Register Circuits
  - IA–3. Sequence Control Circuits
  - IA–4. Signaling Circuits
  - IA–5. Master Signal Control Circuit
  - IA–6. Preference Control Circuit
  - LA–7. Line Lockout and Line and Cut-off Circuits
  - IA–8. Trunk Selection
  - IA–9. Checking Circuits
  - IA–10. Disconnect Control
- IB. General Description of Operation
  - IB–1. General Description of Signaling Sequence
  - IB–2. Service Request Call
    - IB–2a. Registration of Group Information
    - IB–2b. Registration of "B" Information
    - IB–2c. Registration of "A" Information
    - IB–2d. Registration and Transmission of Trunk Information
    - IB–2e. Closure of Channel Through Networks
  - IB–3. Terminating Call
  - IB–4. Disconnecting an Established Connection
  - IB–5. Release of Concentrator Circuit
  - IB–6. Signal Circuit Monitoring Facility
  - IB–7. Trunk Overflow
  - IB–8. Service Denial
  - IB–9. Alarms

II. Detailed Description
- IIA. Detailed Description of Originating Call
  - IIA–1. Seizure of the Control Circuit
  - IIA–2. Signal Relays—Group Information
  - IIA–3. Seizure of the Preference Control Circuit
  - IIA–4. Remote Unit—Group Information Registration
  - IIA–5. Control Unit—Group Information Registration
  - IIA–6. Trunk Selection
  - IIA–7. Remote Unit—"B" Information
  - IIA–8. Control Unit—"B" Information Registration
  - IIA–9. Remote Unit—"B" Information Registration
  - IIA–10. "A" Information
  - IIA–11. Registration of "A" Information at the Remote Unit
  - IIA–12. Registration of "A" Information at the Control Unit
  - IIA–13. Match Check Operation
  - IIA–14. Steering Level Select Magnet Operation
  - IIA–15. Transmitting Trunk Information
  - IIA–16. Selection of Trunk 09 or 19
  - IIA–17. Release of Line Relay at Remote Unit
  - IIA–18. Hold Magnet Check at Remote Unit
  - IIA–19. Release of Control and Remote Units
- IIB. Detailed Description of Terminating Call
  - IIB–1. Seizure of Control Circuit
  - IIB–2. Registration of Group Information at the Control Unit
  - IIB–3. Trunk Selection at Control Unit
- IIC. Disconnect Call
  - IIC–1. Trunk Hold Control
  - IIC–2. Identification of Line On Disconnect Call
  - IIC–3. Transmitting Group and Class of Call Information
  - IIC–4. Registration of "B" and "A" Information
  - IIC–5. Release
  - IIC–6. Timing Circuit 10TM3
- IID. Service Denial Call
  - IID–1. Seizure of Control Unit
  - IID–2. Release of a Service Denial Call
- IIE. Preference Control
- IIF. Alarm Circuit
- IIG. Line Lockout Circuit Operation on Simultaneous Calls
- IIH. Trunk Overflow Indication

Appropriate reference may be made to the sequence charts to facilitate comprehension of the detailed description.

I. GENERAL DESCRIPTION

IA. General Description of Major Components

As indicated in FIG. 1 the control unit is located at the central office and is coupled to the remote unit by twenty speech trunks and two signal pairs. It is apparent from FIG. 1 that all of the components to the left of line **120** are remotely located and all equipment to the right is located at the central office.

IA–1. CROSSPOINT NETWORKS

A crosspoint network **102** is utilized at the remote unit to associate lines and trunks and includes four six-wire crossbar switches having three lines per crosspoint. Lines appear on the switch horizontals and trunks on the verticals. Two steering levels (not shown in FIG. 1, but shown in detail in FIG. 8) serve to select one of the two lines in a crosspoint. The lines are divided into two groups of 49 lines each, with each group having full access to an individual group (0 or 1) of ten trunks. A similar network **101** at the central office includes three six-wire switches having two lines per crosspoint.

The hold magnets utilized in both units are of the magnetic latching type in order to reduce power consumption. Reference may be made to an article entitled "Magnetic Latching Crossbar Switches," Bell System Technical Journal September 1960, p. 135, for a description of suitable apparatus.

IA–2. REGISTER CIRCUITS

A register circuit at the control unit includes groups of relays adapted to register the line group (0 or 1) and

connect or disconnect indications. The register also stores the "B" part of the line number, the "A" part of the line number and the trunk number.

These registrations are stored in corresponding groups of relays in the register circuit **107** of the control unit shown in detail at FIG. 12.

Similar registration facilities are available in the register circuit **117** of the remote unit, the latter being shown in detail at FIG. 6.

IA–3. SEQUENCE CONTROL CIRCUITS

Groups of "W–Z" relays are utilized in a manner analogous to that of a program arrangement for dictating the order of operation of particular signal functions. Physically the sequence control **112** at the control unit comprises three groups of W–Z relay combinations adapted to be sequentially operated in the order W1, Z1, W2, Z2, etc. Operation of these relays modifies contact paths in the signaling and other circuits to permit gradual progression of the control unit and remote unit through the various steps necessary to complete a connection or disconnection.

The sequence control circuit **115** at the remote unit is completely analogous to that described for the control unit **112**. Both are shown in detail at FIGS. 7 and 15, respectively.

IA–4. SIGNALING CIRCUITS

A signal circuit **110** at the control unit includes two pairs of sensitive and marginal relays **13S1–13S4**. The sensitive relays are operated when a minimum current is supplied to the signal circuit but the marginal relays are designed to present a sufficient threshold or margin before operating to insure that a current flow greater than that merely necessary to operate the sensitive relay has been supplied. The signal circuit for the control unit is shown in detail at FIG. 13. Similar facilities are available for the remote unit **115**. In fact, the remote unit is fully complementary to the control unit signaling circuit and also includes two pairs of sensitive and marginal relays **7S1–7S4**.

Thus a sensitive and marginal relay at the control unit is adapted to operate in conjunction with a complementary sensitive and marginal relay at the remote unit. The four relays are coupled by a single conductor and are adapted for bidirectional operation. Thus the signals may originate at the control unit signal circuit **110** in the case of a terminating call to convey information to the remote unit signal circuit **114** relating to the called line. The same combinations of relays at the remote and control units are operated in view of the serial arrangement of the operating windings, e.g. **7S1**, **7S3**, **13S1** and **13S3**.

Alternatively on an originating call the signals may emanate from the remote unit **114** to forward information relating to the identity of the calling line to the signal circuit **110**. Again the same relay combinations would be operated.

Thus both signal circuits may be operated simultaneously under control of either unit. After the signal relays are operated the information stored thereon is delivered to the register circuits **107** and **117** as discussed above.

IA–5. MASTER SIGNAL CONTROL CIRCUIT

To prevent competition between the remote unit and the control unit on simultaneous originating and terminating calls and to preclude mutual lockout between the two units on such calls when both units are attempting to initiate signaling concurrently a master signal control circuit **113** shown in detail at FIG. 15 dictates the order in which the signal circuits of the two units may operate.

IA–6. PREFERENCE CONTROL CIRCUIT

Equipment having a related function is shown generally as the preference control circuit **109** and in detail in FIG. **16**. In the event of simultaneous calls the preference circuit, which includes a number of relay chains, selects the type of call to be served and locks out other calls until the preferred call has been served. The preference circuit in addition indicates the line group number (0 or 1). The types of calls among which preference control selects include (1) service request or dial tone, (2) terminating calls, and (3) disconnect calls.

IA–7. LINE LOCKOUT AND LINE AND CUT-OFF CIRCUITS

These circuits are shown generally at **103** and **105** for the control circuit and **104** and **118** for the remote unit. The line and cut-off relays in circuit **104** are used to recognize service requests and to disconnect the line relay circuit when the line is connected through the concentrator to the central office equipment. The line and cut-off relays for the remote unit are shown in detail at FIGS. 2 and 5, respectively, and are both of the magnetically latching type to insure that they will be held in the desired condition indefinitely without additional power drain.

Identification of a calling line on a service request call is obtained at the remote unit through two separate lockout chains in circuit **118** under control of the line relay in circuit **104**. A first chain identifies one of twelve groups. The second chain selects one of nine lines within the groups. Resistors in series with the relays in the second chain preclude the possibility of obtaining an ambiguous number due to simultaneous requests on a plurality of lines as will be explained in detail herein.

At the control unit identification circuit **105**, a terminating call is recognized by a change in the sleeve condition in the central office which operates a sleeve relay in equipment **103** shown in detail at FIG. 8. The latter relay is individual to the line and initiates identification of the call through two lockout chains in unit **105** in a manner analogous to those discussed for the remote unit. In addition, a cut-off relay in circuit **103** shown in detail at FIG. 11, is used in the control unit to disconnect the sleeve relay while the line is cut through the concentrator. The cut-off relay at the control unit is also magnetically latching. As a result of the operation of the cut-off relays at the remote unit and at the control unit the line is provided with a "clean" tip and ring when cut through, i.e., there are no bridging or shunting connections on the line. It will be noted that the line terminations at the circuit **103** are individually extended to the line and cut-off relays **123** in the central office. The latter relays represent the conventional line circuits in the central office.

IA–8. TRUNK SELECTION

A selection circuit **108** shown in detail at FIG. 16 determines which idle trunk is to be selected. The circuit includes a plurality of relays individual to the trunks and is arranged in a chain. The selection circuit **108** is used both for selection of a trunk for connection and for disconnection as explained in detail herein.

IA–9. CHECKING CIRCUITS

Comprehensive checking arrangements to insure the validity of operation of the remote and control units are shown in outline at circuits **116** and **111**, respectively, and in further detail at FIGS. 4 and 10, respectively.

Various types of checks are performed sequentially during the operation of the concentrator and include the checking of registration of one and only one unit of information for the group "A" identification, "B" identification, etc. Checks are also undertaken to insure that only valid identifications have been established in the event of simultaneous calls. Moreover, a check is undertaken to insure that the information in the register circuits **117**, **107** accurately reflects the information which appeared on the signal relays in signal circuits **114** and **110**.

Still further checking operations are undertaken to as-

certain that the correct hold magnets and trunk relays, etc., are operated.

IA–10. DISCONNECT CONTROL

A disconnect control circuit **106** shown in detail at FIG. 16 insures that a minimum of eight lines will always be cut through to the central office. The disconnect circuit is disabled when four or less lines per group are cut through to trunk circuits. As a result of this feature the lines will remain cut through even though not in use if fewer than four lines in the group are cut through.

IB. General Description of Operation

For facility, in comprehending the detailed description which follows herein, a brief description of each major type of operation omitting detail and emphasizing substance follows.

IB–1. GENERAL DESCRIPTION OF SIGNALING SEQUENCE

As indicated above, the signaling arrangement is ternary in form. The two combinations of sensitive and marginal relays and the application of the three current levels to the signal conductors yield a total of nine individual signals for transmitting the digital information.

The direction of transmission of the signal information is related to the type of call being serviced. Manifestly, in the case of an originating call at the remote unit—a service request call—the information regarding the calling subscriber's line is available at the remote unit. As a result, the direction of transmission of the information regarding the line identification is from the remote unit to the control unit. Alternatively, in the event of a terminating call, the information designating called lines emanates from the control unit at the central office.

In the case of an originating call, the signal relays are operated in accordance with the information stored in the line lockout circuit **118** which in turn is responsive to the operation of the line relays in circuit **104**. Since the signal relays are bidirectional in operation, signal circuits **110** and **114** are energized simultaneously to reflect the appropriate information. As indicated above, this information is then stored in the corresponding register circuits **117** and **107**.

In the case of a terminating call the information respecting the called line derives from relay combinations in the line lockout circuit **105** which in turn is responsive to the operation of a particular sleeve relay. Again, signal circuits **110** and **114** are energized simultaneously and the information is ultimately stored in the registers **107** and **117**. However, it is apparent that in this instance the information is transmitted in a direction from the control unit to the remote unit.

In either event, however, the information is transmitted sequentially in the following order:

Digit No:	Information
1st	Line group (0 or 1) and connect or disconnect indication.
2nd	"B" part of line number (one or 9 combinations).
3rd	"A" part of line number (one of 6 combinations).
4th	Trunk number (one of 9 combinations).

Although the two groups of signal relays at both ends of conductors TS0 and RS0 are symmetrical and bidirectional in operation, as indicated above, they are capable collectively of furnishing only nine digit indications. Since twenty trunks are used in two groups of ten trunks each, it is apparent that a separate signal must be rendered to indicate the tenth trunk. This information is transmitted over the second signal pair TS1 and RS1. Moreover, the second signal pair is utilized for a number of additional signaling functions including advancing the sequence control at both units, checking indications and concentrator release indications.

IB–2. SERVICE REQUEST CALL

When a call is originated by an off-hook condition at the calling substation, a line relay in circuit **104** individual to the calling substation is operated and in turn results in the operation of two unique identifying relays in the line lockout circuit **118** as discussed above. Operation of the latter identification relays supplies a low resistance ground connection to signal lead TS0 if the call is in group "0" or to signal lead RS0 if the call is in group "1." This indicates to the control circuit that a service request is present and identifies the group (lines **0–49** are in group "0," **50–99** in group "1") by operating a relay in the preference control circuit **109**. When the service request call obtains preference the control unit operates a relay in the master signal control circuit **113** to initiate a mark signal and to operate a similar relay in the remote unit. This results in the operation of specific signal relays (7S1–7S4 and 13S1–13S4) at both the remote unit and the control unit to reflect the particular group in which the calling line is located and also the class of call to be served. Thus the signal relays in the signal circuits **114** and **110** are simultaneously operated in accordance with a particular code arrangement given in detail herein and if the calling line is illustratively assumed to be line **99** the call will be in group "1."

IB–2*a*. REGISTRATION OF GROUP INFORMATION

After the operation of the signal relays, the register relays in registers **107** and **117** are operated in accordance with the information stored in the signal relays. Thus the group number has been stored in the register circuits **117** and **107** of the remote and control units.

When the registration has been completed and checked, the checking circuits **116** and **111** release the mark and signal relays and by means of W–Z relay combinations, as described above, the sequence control circuits **115** and **112** in the remote and control units are simultaneously advanced.

IB–2*b*. REGISTRATION OF "B" INFORMATION

When the sequence control relays have operated and the check relays have released, the signal circuits **110** and **114** are again energized. This time they are operated in response to the particular relay in the line lockout circuit **118** which indicates the "B" portion of the line number. As before, the signal relays are operated in unique combinations simultaneously to store and transmit the "B" portion of the line number under control of the line lockout circuit **118**. Again, this information is registered in registers **117** and **107** simultaneously and checked by the checking circuits **116** and **111**.

When the information has been checked, the sequence control circuits are again stepped in a manner simliar to that described above to prepare for transmitting the "A" portion of the line number. The signal circuits are reactivated under control of the relays in the line lockout circuit **118** indicative of the "A" portion of the line number. The signal relays 7S1–7S4 and 13S1–13S4 are once more operated in a code arrangement which reflects the "A" information.

IB–2*c*. REGISTRATION OF "A" INFORMATION

Register circuits **107** and **117** are simultaneously loaded with the indications stored in the signal relays of circuits **110** and **114**. When the "A" information has been completely registered and checked by checking circuits **116** and **111**, the mark signal is again removed and the sequence control circuits **112** and **115** are advanced to the next and last position by the operation of the final group of "Z" relays.

Thus far the information transmission has been in a direction from the remote unit to the control unit to indicate the identity of the calling line. Since the last item

of information to be transmitted relates to the trunk selection and since this information must emanate from the control unit, a direct ground potential is now applied to the signal relays in the remote circuit 114 to place the signal circuits 110, 114 under control of the trunk selection relays of circuit 108 to transmit to and register the trunk number in the remote unit. Thus the signal relays are again operated, this time in a direction from the control unit and in response to the trunk selection circuit 108, in a unique code which indicates the selected trunk.

IB–2*d*. REGISTRATION AND TRANSMISSION OF TRUNK INFORMATION

Trunk numbers between 0 and 8 are registered directly on the register relays. However, since only nine codes are available a special signal is required when trunk "9" is to be used. This signal is a preliminary signal which precedes the trunk signal and causes operation of a transfer relay in the register circuits 117, 107, to convert a trunk "0" indication into a trunk "9" indication thus providing for the selection of trunk "0" or trunk "9" from the trunk "0" code. This process will be explained in further detail herein.

Registration of the "A" information as described above, without more, signifies completion of transmission and registration of the line information and prepares paths for operating appropriate select magnets in the crossbar networks 101, 102. Also, a matching circuit is completed in the remote unit for verifying that the information stored in the register 117 is the same as the information recorded in the line lockout circuit 113. This match check is performed in circuit 116 and a mismatch prevents further progress of the call.

Before transmitting information relating to the trunk number from the control unit to the remote unit, the control circuit initiates a connection of the selected trunk to the proper line terminals in the central office and releases the cut-off relay at the control unit. This is a useful arrangement—i.e., first establishing the central office end of the connection—since it provides a record in the central office of the attempt to complete a connection at the remote unit and to provide a means for disconnecting in the event of failure to complete.

When the group and line registrations and the select magnet operation have been checked in the checking circuits 116 and 111 a circuit is completed for releasing the cut-off relay. Again this operation is individually checked and if the attempt to release the cut-off relay is successful the hold magnets are operated at the control unit in network 101 and also checked. Subsequently the trunk number is transmitted to the remote unit by appropriate operation of the signal relays and the trunk information is registered simultaneously in both registers 107 and 117.

IB–2*e*. CLOSURE OF CHANNEL THROUGH NETWORKS

When the trunk information has been recorded and the appropriate matching operations have been completed in the checking circuits 116 and 111 and additional checks have been made that only one relay in each register stage is operated and also that the select magnets in the network 102 at the remote unit have operated, a circuit is completed for releasing the cut-off relay at the line and cut-off circuit 104 and for operating the trunk hold magnets in the remote unit network 102. Again the operation is checked at the remote unit in circuit 116 and a signal is transmitted to the control unit indicating a successful completion of the connection in the remote unit. This completes the process of setting up the call and causes the control unit and the remote unit to prepare for release. When the release of both units is accomplished the line is connected to the trunk at both units through magnetically latched hold magnets. The only other relays which remain operated are the cut-off relays in both units which are also magnetically latched. Ultimately a "clean" tip and ring connection is available through the concentrator.

IB–3. TERMINATING CALL

The terminating call emanates from the central office and is directed to the called party initially by the operation of the sleeve relay individual to the line of the called party in the control unit.

Cross-connections from the sleeve relay to lockout chains in circuit 105 identify the line group and the particular line within the group. When the terminating call obtains preference from circuit 109, lockout is achieved in the preference control circuit 109 to serve a terminating call.

Significantly, a signal is transmitted to the remote unit which operates certain release relays in the line lockout circuit 113 while a terminating call is in progress to disable the line lockout circuit. This action prevents competition by the line lockout circuit 113 at the remote unit (which may in the interim attempt to operate to identify an originating calling line) and the line lockout relays in circuit 105 of the control unit. In addition, a direct ground is applied at the remote signal unit 114 to the signal leads to prepare the remote circuit to receive signals from the control circuit in the central office.

Subsequently the sequence of operations is generally similar to that described above for a service request call, with the exception, in this instance, that the signals indicating line numbers all originate at the control unit.

Thus the W—Z relays in the sequence control circuit will govern the signaling facilities to transmit the group number, the "B" part of the line number, the "A" part of the line number, and the trunk number. Also as discussed above, the signal relays will in each instance be operated in accordance with a unique code which defines the information to be transmitted and the register circuits 107 and 117 will operate as before to register the appropriate information which is then checked by circuits 116 and 111. Here again, when all information is complete the crosspoint networks 102 and 101 are operated to complete the connection.

IB–4. DISCONNECTING AN ESTABLISHED CONNECTION

Trunks are released in the preference control circuit 109, shown in detail in FIG. 16, in order of preference when unoccupied, provided that five or more in the group are cut through. However, only as many trunks will be released as is required to leave four in a group to remain in the cut-through condition. In short, this type of operation includes a facility which "delays" disconnecting the subscriber's line from the trunk used in the connection if fewer than four trunks are cut through.

A disconnect request for an individual trunk is initiated, if the trunk hold magnet is operated (indicating that the line is still cut through), that the trunk busy relay is normal (indicating that the line is idle) and that the trunk load control relay, not shown in circuit 106 but shown in detail in FIG. 15, is operated (indicating that more than four or more hold magnets are operated). Under these circumstances appropriate relays are operated in the disconnect control circuit 106 (explained further herein) which will ultimately open the circuits of all sleeve relays toward the central office and connect them to the associated control circuit sleeve leads to prepare for identifying the line to which the trunk is connected. In addition, the trunk selection circuit 108 selects one of the trunks to be disconnected.

It is interesting at this juncture to briefly examine why the line identification is required. This is necessary in view of the fact that merely releasing the hold magnets in the crossbar networks 101 and 102 will not release the magnetically latched cut-off relay unique to the subscriber's line in the line and cut-off circuit 104. Since there is no centralized memory in the central office which can be resorted to for determination of which lines are connected to which trunks, an entirely separate identification procedure to ascertain which line has been connected

to the trunk to be disconnected is necessary. Additional details regarding this disconnect identification procedure follow herein.

After selecting a trunk to be disconnected the trunk selection circuit **108** grounds the trunk sleeve thereby operating the sleeve relay of the line to which the trunk is connected. When the sleeve relay is operated the line is then identified by operation of the associated lockout relays in circuit **105** in the manner described above for a terminating call (which incidentally is also similar to that described above for an originating call).

Prior to transmission of any line or trunk information to the remote unit a preliminary pulse is directed over one of the signaling leads to prepare the remote unit for receiving information from the control unit. Essentially this relates to the provision of a direct ground connection to the signal relays at the remote unit. Subsequently the line and trunk number together with a disconnect indication are transmitted to the remote unit in a manner similar to that of a terminating call. The disconnect indication causes a reversal of polarity in the voltage applied to the cut-off relay in circuit **104** and to the trunk hold magnet in networks **102** and **101**. This reversal produces a magnetic field in opposition to the field holding the apparatus in the operated position (released for the cut-off relay) thereby causing the release of the operated hold magnet and operation of the cut-off relay.

In releasing the connection on a disconnect call the remote circuit and of the established connection is released and checked before the control circuit end. This arrangement serves to keep the trunk "busy" in the event that trouble prevents its release. Moreover, leaving the control unit end of the connection established provides a record of the line to trunk connection and permits repeated attempts thereafter to disestablish the connection.

IB–5. RELEASE OF CONCENTRATOR CIRCUIT

When the checking circuits **111** and **116** indicate that the desired functions have been performed at both ends of the connection, a release relay is operated at the control unit and transmits a release signal to the remote unit. When the control relays in the remote unit have released, a second release relay is operated in the control unit which prevents any other calls from being originated until all relays in the control unit have been released.

IB–6. SIGNAL CIRCUIT MONITORING FACILITY

At the initiation of each call, the two sensitive relays **7S2**, **7S4**, **13S2**, **13S4** must be operated. This insures continuity of the signal circuit leads over which a service request can originate.

IB–7. TRUNK OVERFLOW

When all trunks available to a particular line group are busy, all service requests in that group are canceled and terminating calls receive an overflow signal. This feature will be explained in further detail herein.

IB–8. SERVICE DENIAL

A particularly advantageous faculty of the instant invention includes a provision for preventing a line which has a permanent condition thereon, i.e., receiver offhook, tip to ring short, etc., from holding a trunk out of service to working lines. In the following description this type of arrangement is designated as a "service denial" call or "lockout" operation. When a service denial call is made, the remote unit cut-off relay associated with the line in trouble is operated thereby denying service and completely isolating the line from the concentrator. The desirable feature here is that the entire operation may be controlled from the central office. A line thus disabled may be fully restored to service also from the central office by placing a terminating call to the line.

IB–9. ALARMS

An over-all timer of approximately one second provides an alarm if for any reason a call is not completed within this time. This alarm indicates within defined limits whether the trouble is in the control unit, the remote unit, or the signal circuit.

Another timer is actuated when a disconnect call is made. This latter timer prevents another disconnect call from starting for approximately six seconds.

Having now considered the major components of the concentrator embodiment and the various operative functions in general outline, the concentrator system apparatus and its varied operations will now be considered in depth.

II. DETAILED DESCRIPTION

IIA. Detailed Description of Originating Call

Reference may be made appropriately to the sequence charts as an aid in following the detailed circuit operation. In the idle condition of the control unit, relays **13S2** and **13S4** are operated. As a result of the operation of these relays, relays **12S2A** and **12S4A** are operated over obvious circuits. The corresponding relays **7S2** and **7S4** are likewise operated. For example, in the case of relay **13S2**, a path may be traced from negative battery, resistance **151**, contacts of relays **13RK2**, **15Z1**, **15RR1**, **16DISO4**, **16G1**, **15Z1**, winding of relay **13S2**, winding of relay **13S1**, conductor TSO, winding of relay **7S2**, winding of relay **7S1**, contacts of relay **7Z1**, resistance **71** to ground. Although current traverses relays **7S1** and **13S1** these relays do not operate in view of the marginal threshold included in their design which precludes their operation when resistance **71** is in series with the operating path.

A similar circuit may be traced for relay **13S4** from negative battery, resistance **151**, contacts of relays **13RK2**, **15Z1**, **15RR1**, **16DIS14**, **10T1**, **16G0**, **15Z1**, winding of relay **13S4**, winding of relay **13S3**, conductor RS0, winding of relay **7S4**, winding of relay **7S3**, constants of relay **7Z**, contacts of relay **7Z1**, resistance **72** to ground.

IIA–1. SEIZURE OF THE CONTROL CIRCUIT

When a service request is made at the remote unit the resistance ground on conductor TS0 or RS0 is changed to a direct ground connection. More specifically, when a customer, illustratively the customer assigned to substation **99**, lifts his receiver an appropriate line relay **2L99** is operated over the loop, the switchhook contacts, not shown, and the closed contacts of the corresponding cut-off relay **5C099**. Thereafter, line identification relays unique to the calling line and specifically relays **3LA11** and **3LB04** will be operated to identify the calling substation line.

The operating path for relay **3LA11** may be traced from ground, contacts of relay **2L99**, winding of relay **3LA11**, contacts of relays **3LA10**, **3LA06**, **3LA05**, **3LA04**, **3LA00**, **4MK**, **7RRA**, resistance **31** to negative battery.

In accordance with the lockout features hereinafter described in further detail, relay **3LB04** does not operate until a path can be traced over the contacts of operated relay **3LA11**. This path includes ground, contacts of relay **3LA11**, resistance **35**, contacts of relay **2L99**, winding of relay **3LB04**, contacts of relay **3LB04**, contacts of relays **3LB08**, **3LB04**, **3LB00**, resistance **33** to negative battery.

Relays **3LA11** and **3LB04** lock operated over their own contacts, for example in the case of relay **3LB04**, over the contacts of relays **3LB04**, **3LB00**, resistance **33** to negative battery.

IIA–2. SIGNAL RELAYS—GROUP INFORMATION

Operation of relay **3LA11** causes operation of appropriate signal relays, specifically relay **7S3**, and corre-

sponding control unit relay 13S3. Auxiliary relays 7S3A and 12S3A are then operated over obvious paths.

More specifically, as a result of the operation of relay 3LA11, relay 7S3 is operated over a path which may be traced from ground, contacts of relays 3LA11, 7Z1, windings of relays 7S3, 7S4, conductor RS0, windings of relays 13S3, 13S4, contacts of relays 15Z1, 16G0, 10T1, 16DIS14, 15RR1, 15Z1, 13RK2, resistance 151 to negative battery.

IIA–3. SEIZURE OF THE PREFERENCE CONTROL CIRCUIT

As explained previously on the origination of a call at station 2L99, the resistance ground on lead RS0 through resistance 72 was changed to a solid ground at the contacts of relay 3LA11 and relays 7S3 and 13S3 were operated.

Assuming that relays 15RR1 and 16TGB1 are normal, relay 12S3A will close an operating path for relay 16SRP1 to indicate a service request call in group "1." An operating path may be traced from negative battery, resistance 162, contacts of relays 15Z1, 15RR1, 16TGB1, 12S3A, winding of relay 16SRP1, contacts of relays 16SRP0, 16DP1, 16DP0 to ground. This action identifies the calling line as being in group "1."

Operation of relay 16SRP1 closes a locking path for itself over its own contacts and also closes an operating path for relay 16SR1 which may be traced to ground, contacts of relays 10RL2, 15Z1, 16TP1, 16TP0, 16SRP1, winding of relay 16SR1 to negative battery.

Operation of relay 16SR1 causes the operation of group relay 16G1 over an obvious path. Operation of relay 16G1 closes an operating path for relay 15M over a path from ground, contacts of relays 16G0, 16G1, 10RL1, 13RK2, 15Z1, 16SR1, winding of relay 15M to negative battery. Operation of relay 15M at the control unit results in the operation of relay 7M at the remote unit over a path including ground, contacts of relays 15M, 10RL1, resistance TS1, conductor TS1, winding of relay 7M, winding of relay 7RLS to negative battery.

IIA–4. REMOTE UNIT—GROUP INFORMATION REGISTRATION

As explained above, relay 7M is operated over the signal lead TS1 and in turn results in the operation of relay 7W1 over a path from ground, contacts of relays 7RLS, 7M, 7Z1, 7W1, winding of relay 7W1 to negative battery. Relay 7Z1 locks operated over its own contacts. Relay 6CG1 in the register circuit now operates over a path which may be traced from negative battery, winding of relay 6CG1, contacts of relays 7Z1, 7S3A, 7S2, 7S1A, 7CK, 7Z1, 7W1, conductor 601, contacts of relays 7M, 7RLS to ground. Operation of relay 6CG1 results in the operation of relay 7CK over a path from ground, winding of relay 7CK, contacts of relays 6CG1, 7Z1, 7W1, resistance 71 to negative battery. Operation of relay 7CK opens the register circuit of FIG. 6 so that no false registration may occur, by opening the contacts of relay 7CK in FIG. 6.

Battery potential is now applied to signal lead RS1 over a path from negative battery, resistance 73, contacts of relay 7CK, diode CK to conductor RS1 to indicate that group registration of group "1" has been registered and completed in the remote unit.

IIA–5. CONTROL UNIT—GROUP INFORMATION REGISTRATION

Operation of relay 15M at the control unit causes the operation of relay 15W1 over a path which may be traced from ground, contacts of relays 15M, 15Z1, 15W1, winding of relay 15W1 to negative battery. Relay 15W1 locks operated over its own contacts.

Operation of the latter relay causes the group registration (group "1") in the register circuit at the control unit (FIG. 12) by the operation of relay 12CG1 over a path from negative battery, winding of relay 12CG1, contacts of relays 15Z1, 12S3A, 12S2A, 12S1A, 15M, 13RK2, 15Z1, 15W1 to ground. Relay 10CCK now operates over a path from ground, winding of relay 10CCK, contacts of relays 15Z1, 16DIS16, 12CG1, 12CG0, 12DIS06, 15W1, resistance 101 to negative battery. Operation of relay 12CG1 causes the operation of relay 16TST1 over a path from ground, winding of relay 16TST1, contacts of relay 16HS19, contacts of relays 16HS10, 12CG1, resistance 161 to negative battery.

Operation of relay 12CG1 also partially closes an operating path for relay 16HS10.

IIA–6. TRUNK SELECTION

Operation of relay 16TST1 closes a path to operate relay 16HS10 (assumed for illustrative purposes to be) associated with an idle trunk. Operation of relay 16HS10 may be traced from ground, winding of relay 16HS10, contacts of relays 16TST1, 12CG1, 8TB10, 14A10, resistance 164 to negative battery. Operation of relay 16HS10 results in the release of higher numbered relay 16HS— and locks operated over a path from contacts of relays 16HS10, 12CG1, resistance 161 to negative battery.

Relay 10HSK1 now operates over a path from negative battery, resistance 102, contacts of relay 16HS10, through the contacts of relays 16HS11 through 16HS19, winding of relay 10HSK1 to ground. Relay 8TB10 operates over a path from ground, contacts of relays 10HSK1, 12CG1, 16HS10, winding of relay 8TB10 to negative battery.

When the registration of the group is completed in the remote circuit, battery was placed on lead RS1 at the remote circuit (section IIA–4, supra) to operate relay 13RK1 over a path including ground, winding of relay 13RK1, contacts of relays 150TR, 16SR1, resistance RS1, conductor RS1, diode CK, contacts of relay 7CK, resistance 73 to negative battery. Relay 13RK2 now operates over an obvious path. The latter relay indicates that group registration of information in the remote circuit is complete and the sequence circuit should be advanced to permit handling of the "B" information. Operation of relay 13RK2 with relay 10CCK previously operated results in the release of relay 15M at the normally closed contacts of relay 13RK2. Release of relay 15M results in the operation of relay 15Z1 over a path from ground, contacts of relays 15M, 15Z1, 15W1, winding of relay 15Z1 to negative battery. Relay 10CCK now releases at the contacts of relay 15Z1 in series therewith. Release of relay 15M also removes the ground connection at the contacts of relay 15M from conductor TS1 which signals the remote circuit to likewise advance its own sequence circuit as described herein. Moreover, operation of relay 15Z1 also results in the release of signal relays 13S2, 13S3 and 13S4, 7S2, 7S3 and 7S4 and the corresponding auxiliary relays.

IIA–7. REMOTE UNIT—"B" INFORMATION

When relay 7M releases, relay 7Z1 operates over a path from ground, contacts of relays 7RLS, 7M, 7Z1, 7W1, winding of relay 7Z1 to negative battery. Operation of the latter relay results in the release of relay 7CK at the contacts of relay 7Z1. Release of relay 7CK opens a path from battery to signal lead RS1 to indicate to the control circuit to release relay 13RK1 which in turn releases relay 13RK2.

Release of relay 13RK2 results in the operation of relay 15SB2 over a path from ground, contacts of relays 16G0, 16G1, 10RL1, 13RK2, 10CCK, 15Z3, 15Z1, 16SR0, 16SR1, winding of relay 15SB2 to negative battery. Operation of relay 15SB2 results in the operation of relay 15SB1 over a path from negative battery, winding of relay 15SB1, contacts of relays 15SB2, 15Z1 and 15Z3 over the remainder of the path previously traced for the operation of relay 15SB2. At the control unit, operation of relay 15SB1 results in the application of battery potential to the signaling conductors. Specifical-

ly, potential is applied to the control trunk to charge the trunk's distributed capacity over a path from negative battery, resistance 151, contacts of relays 13RK2, 15Z3, 15SB2, 15SB2 (second contact), 15SB1, resistance TS0 to the control conductor TS0. A similar path may be traced for conductor RS0. Subsequent operation of relay 15SB1 now applies battery to the signal relays over a path from negative battery, resistance 151, contacts of relays 13RK2, 15SB1, 15Z3, 15SB2, winding of relay 13S2, winding of relay 13S1, resistance TS0, conductor TS0. Simultaneously, it is apparent that the contacts of relay 15SB1 in shunt with the windings of the signal relays are opened to remove the short circuit from across those windings.

The signal relays 7S2, 7S4, 13S2 and 13S4 are now operated over a path determined by the operated relay 3LB04. Thus a path may be traced from ground, resistance 72, contacts of relays 7Z1, 7Z2, 3LB04, 7Z2, 7Z1, windings of relays 7S3 and 7S4. A similar path may be traced over conductor TS0 including relays 7S1 and 7S2.

It may be noted parenthetically that when signaling originates at the control unit direct ground is applied at the remote unit to the signal relays over the contacts of relay 7RRA. In view of the resistances 71 and 72 in series with the operating path, marginal relays 7S1 and 7S3 do not operate although sensitive relays 7S2 and 7S4 do operate. Similarly, relays 13S2 and 13S4 are also operated.

Operation of relay 15SB1 referred to above results in the operation of relay 15M over a path from negative battery, winding of relay 15M, contacts of relays 16SR1, 15Z1, 15SB1, 15SB1 (second contact), 15SB2, 15Z1, 5Z3 over the path previously described for the operation of relay 15SB1. Operation of the signal relays results in the operation of the auxiliary signal relays over obvious paths. It will be noted that an additional path for the operation of relay 15M is available over the contacts of relays 16SR1, 15Z1, 15SB1, 13RK2, 10RL1, 16G1, 16G0 to ground.

IIA–8. CONTROL UNIT—"B" INFORMATION REGISTRATION

When relay 15M operates the sequence circuit is advanced by operating relay 15W2 from ground, contacts of relays 15M, 15Z1, 15Z2, 15W2, winding of relay 15W2 to negative battery. Operation of relay 15W2 results in the operation of register relay 12B4 from negative battery, winding of relay 12B4, contacts of relays 15Z2, 15Z1, 12S4A, 12S3A, 12S2A, 12S1A, 15M, 13RK2 15Z2, 15W2 to ground.

Registration of "B" information in the control unit is now checked in the checking circuit of FIG. 10 over a path from negative battery, resistance 101, contacts of relays 15W1, 16DIS06, 12CG0, 12CG1, 16DIS16, 15Z1, 15W2, contacts of relays 12B0–12B3, contacts of relay 12B4, contacts of relays 12B5–12B8, 15Z2, winding of relay 10CCK to ground.

IIA–9. REMOTE UNIT—"B" INFORMATION REGISTRATION

When relay 15M operates at the control unit, a path is completed for the operation of relay 7M at the remote unit over conductor TS1 in the manner traced above. The sequence circuit in the remote unit is now activated through the operation of relay 7W2 over a path from ground, contacts of relays 7RLS, 7M, 7Z1, 7Z2, 7W2, winding of relay 7W2 to negative battery.

The "B" information is now registered in the remote unit by the operation of relay 6B4 over a path from negative battery, winding of relay 6B4, contacts of relays 7Z2, 7Z1, 7S4A, 7S3A, 7S2, 7S1A, 7CK, 7Z2, 7W2, conductor 601, contacts of relays 7M, 7RLS to ground. Relay 7CK now operates over a path from negative battery, resistance 71, contacts of relays 7W2, 7Z2, 6B4 (not shown), winding of relay 7CK to ground.

At this time select magnet 5SMB8 operates over a path including the contacts of relay 6B4.

In the control unit, relays 13RK1 and 13RK2 operate over paths similar to those described above for their previous operation.

As a result of the operation of relay 13RK2 and with relay 10CCK previously operated, battery potential is divorced from the signaling conductors causing the release of all of the signal relays previously operated.

Substantially simultaneously therewith, relays 15SB1, 15SB2 and 15M are all released at the contacts of relays 13RK2 and 10CCK in series therewith. Relay 15Z2 is now operated in the control unit to indicate the completion of the "B" information function and results in the release of relay 10CCK in view of the opening of the contacts of relay 15Z2 in series therewith. In the manner indicated above for the group information, relay 7M in the remote unit now releases over the path described above for its previous release.

IIA–10. "A" INFORMATION

At the remote unit, the sequence circuit is now advanced in response to the release of relay 7M by the operation of relay 7Z2 over a path from ground, contacts of relays 7RLS, 7M, 7Z2, 7W2, winding of relay 7Z2 to negative battery. Relay 7CK now releases as a result of the opening of the contacts of relay 7Z2 in series therewith. As a result of the release of relay 7CK, relays 13RK1 and 13RK2 are released due to the opening of the contacts of relay 7CK in series with the winding of relay 13RK1.

Relay 15SB2 now operates over the path described hereinabove for its operation with respect to the "B" information. Relay 15SB1 operates also in the manner described above for its operation. At this time battery is applied to the signal conductor TS0 over the contacts of relay 15SB2 in the manner described above for processing the "B" information. Subsequent thereto the operation of relay 15SB1 applies signal potential to the signaling relays connected to conductor TS0 and removes the shunt from the windings of those relays and relay 15M operates as a result of the operation of relay 15SB1 over paths traced above with respect to the "B" information.

At this time relays 7S1, 7S2, 13S1 and 13S2 are operated over a path from ground, contacts of relay 3LA11, contacts of relays 7Z2, 7Z1 to the control conductor TS0. Since direct ground is applied to the control conductor TS0 both the marginal relay 7S1 and the sensitive relay 7S2 are operated.

As a result of the operation of relay 15M in the control unit, relay 7M is operated at the remote unit in the manner described above. Relay 15W3 operates over a path including ground, contacts of relays 15M, 15Z1, 15Z2, 15Z3, 15W3, winding of relay 15W3 to negative battery and relay 7W3 operates over a path from ground, contacts of relays 7M, 7Z1, 7Z2, 7Z3, 7W3, winding of relay 7W3 to negative battery.

IIA–11. REGISTRATION OF "A" INFORMATION AT THE REMOTE UNIT

At this time the "A" information is registered by the operation of relay 6A5 over a path from ground, contacts of relays 7RLS, 7M, conductor 601, contacts of relays 7W3, 7Z3, 7CK, 7S1A, 7S3A, 7S4A, 7Z1, 7Z2, 7Z3, winding of relay 6A5 to negative battery.

IIA–12. REGISTRATION OF "A" INFORMATION AT THE CONTROL UNIT

A similar path may be traced for the operation of relay 12A5 at the control unit to register the "A" information. This path extends from ground, contacts of relays 15W3, 13RK2, 15M, 12S1A, 12S3A, 12S4A, 15Z2, 15Z3, winding of relay 12A5 to negative battery. Although the operation of relays 6A5 and 12A5 have been shown as illustrative the specific relay operated depends on the particular 3LA— relays which have been operated in response to the identity of the line.

IIA–13. MATCH CHECK OPERATION

Operation fo relay 6A5 results in the operation of match check relay 4MK over a path from ground, winding of relay 4MK, normal contacts of relays 6B8 through 6B5, contacts of relay 6B4, normal contacts of relays 6B3 through 6B0, contacts of relay 6A5, normal contacts of relays 6A4 through 6A0, normal contacts of relays 6DG1, 6CG0, contacts of relay 6CG1, normal contacts of relay 6DG0, conductor 42, contacts of relays 7Z3, 3LB4 (not shown), 6B4 (not shown), 6CG1, 6A5, 3LA11 thorugh the normal contacts of relays 3LA10–3LA00, 4MK, 7RRA, resistance 31 to negative battery. This check verifies that one and only one relay is operated for the group information, the "B" information and the "A" information.

In addition, this check also establishes the similarity between the information in the register circuit and the identification relays operated (e.g., 6A5 and 3LA11).

With respect to line lockout to prevent ambiguity of the identification in the event of simultaneous originating calls, it is noted that the contacts of relay 3LA11, for example, are in series with the line relay contacts, for example relay 2L99. This prevents any other relay 3LB— from operating other than a relay 3LB— associated with line relay 3LA11.

As an example, if relays 2L99 and 2L95 are simultaneously operated on originating calls, either one may be served as determined by the preference accorded the operated relay 3LB— but either one receiving service represents a legitimate rather than a spurious connection. To prevent ambiguous "B" identification for a particular "A" indication, for example in the case of relays 2L99, 2L95 and 2L86 being operated, series resistors are included, such as resistance 35, to offset the possibility of such a situation on the presumption that relays 3LB— are designed as low resistance operating relays. Thus in the instance referred to, relay 3LB00 will be favored since the operating path has a substantially lower resistance than that of relay 3LB04.

Further, with regard to the line lockout features, it may be noted that each of the relays 3LB— and 3LA— has a double lockout feature which works as follows: if relay 3LB04 is operated the normally closed contacts of relay 3LB04 shown in FIG. 3 prevent the operation of any higher numbered relay 3LB— and also prevent the operation of any lower numbered relay 3LB— thus providing positive lockout protection.

IIA–14. STEERING LEVEL SELECT MAGNET OPERATION

At the control unit the steering level select magnets and the control or line select magnets are now operated. For the illustrative telephone connection now being traced from substation 2L99, steering level select magnet 11SMC9 operates over a path from negative battery, resistance 115, contact of relays 12B4, 12A5, winding of relay 11SMC9 to ground. Moreover, line level select magnet 11SMC4 is now operated over a path from ground, winding of relay 11SMC4, contacts of relays 12B4, 12A5, 12CG1, resistance 116 to negative battery.

When the "A" information is registered as indicated in the preceding paragraph, relay 10CCK is operated over a path from ground, winding of relay 10CCK, contacts of relays 10MK, 15Z3, 12A5, normal contacts of relays 12A4 through 12A0, contacts of relays 15W3, 15Z2, normal contacts of relays 12B6 through 12B8, contatcs of relay 12B5, normal contacts of relays 12B4 through 12B0, contacts of relays 15W2, 15Z1, 16DIS16, 12CG1, 12CG0, 16DIS06, 15W1, resistance 101 to negative battery.

At the remote unit, relay 7CK is operated as the result of the operation of relay 4MK over a path from ground, winding of relay 7CK, contacts of relays 6T0, 6T1, 4MK, 7Z3, 7W3, resistance 74 to negative battery. Operation of relay 7CK results in the operation of relays 13RK1 and 13RK2 in the manner described above. It will be noted that after the operation of relay 6A5, a line level select magnet in the remote unit is operated over a path from negative battery, winding of select magnet 5SMB6, contacts of relays 6A5, 6B4 to ground.

The registration of the "A" information having been completed, battery is now applied to the signal lead RS1 to operate relays 13RK1 and 13RK2 in the manner explained above. Joint operation of relays 13RK1 and 13RK2 as explained above results in the release of relay 15M at the control unit and the corresponding release of relay 7M at the remote unit in the manner described above. In addition, relays 15SB2 and 15SB1 are released in view of the opening of the contacts of relays 13RK2 and 10CCK in series therewith. Moreover, signal relays 7Z1, 7Z2, 13S1 and 13S2 are now released together with their auxiliary relays as a result of the opening of the contacts of relay 10CCK.

Release of relay 15M described above, removes ground from conductor TS1 which signals the sequence circuit to advance by operating relay 15Z3 over a path from ground, contacts of relays 15M, 15Z3, 15W3, winding of relay 15Z3 to negative battery. Operation of relay 15Z3 transfers the operating path of relay 10CCK to the contacts of relay 10SMK. Relay 10MK now releases at the contacts of relay 15Z3 in series therewith and relay 10CCK releases in view of the opening of the contacts of relay 15Z3 in series therewith.

At the remote unit, relay 7M releases as a result of the release of relay 15M in the manner described previously. Again this serves as a signal to the remote sequence circuit, this time to operate relay 7Z3, over a path from ground, contacts of relays 7RLS, 7M, 7Z3, 7W3, winding of relays 7Z3 to negative battery. Operation of relay 7Z3 results in the release of relay 7CK in view of the opening of contacts of relay 7Z3 in series therewith. This removes battery potential from signal lead RS1 and the contacts of relay 7CK at the remote unit cause the release of relays 13RK1 and 13RK2. In addition, relay 7Z3 causes the release of previously operated identification relays 3LA11 and 3LB04.

At the control unit operation of relay 10SMK results in the operation of cut-off relay 11C099 over a path from negative battery, resistance 117, contacts of relays 10SMK, 12CG1, 12A5, 12B04, winding of relay 11C099, contacts of relays 10HSK1, 16DIS14, winding of relay 11C0K1. This causes the operation of relay 11C0K1 and release of relay 11C099. Release of relay 11C099 prevents terminating calls to the line by opening the relay 8SL99 and the contacts of relay 11C099 in series therewith.

Parenthetically, it may be noted that the contacts of the cut-off relays are shown as normally open. This would indicate that during the normal or idle condition of the line, the cut-off relays are normally operated. In this case (idle line condition), they are magnetically latched in the closed condition, and are opened when a connection for a talking path exists.

Operation of relay 11C0K1 closes an obvious path for the operation of relay 11C0K2 and operation of the latter relay closes paths for operation of the hold magnets. The path for the operation of the hold magnets may be traced from negative battery to resistance 142, contacts of relays 10HSK1, 11C0K2, 12CG1, 16TB10, 16HS10, winding of hold magnet 14HMC10, contacts of relay 16DIS14 to ground. It will be noted that hold magnets 16HMA10 and 14HMB10 are likewise operated in parallel with hold magnet 14HMC10.

Operation of the hold magnet results in the operation of hold magnet check relay 14HMK from ground, winding of relay 14HMK, contacts of relays 14HMC10, 14HMB10, 14HMA10, 16HS10, 10HSK1, resistance 141 to negative battery. This serves to check that all the appropriate hold magnets have been operated.

IIA–15. TRANSMITTING TRUNK INFORMATION

When the remote circuit has advanced its sequence circuit as described above by the operation of relay 7Z3, and relays 13RK1 and 13RK2 are released, the release of relay 13RK2 with relay 14HMK operated, closes an operating path for relay 150TR if a trunk in the group "09" or "19" has been selected or causes the operation of relay 15SB2 if any other trunk has been selected. Since trunk 10 has illustratively been selected, relay 15SB2 is operated over a path similar to that described above. When relay 15SB2 operates, battery is applied to conductors TS0 and RS0 to charge the cable in the manner described above. Subsequent operation of relay 15SB1, also in the manner described above, causes connection of the battery potential to the signal relays and removes the shunt across the windings of these relays. The signal relays which are operated are dependent on the trunk information to be transmitted. For trunk 10, as illustrative, no signal relays will be operated. This is apparent from Table 3 appended hereto.

Therefore, when battery is connected to the signal relays, none of these relays operates and none of the signal relays at the remote unit is operated.

At this time, relay 15M operates over the contacts of relay 15SB1 in the manner described above for previous operations. Relay 15W4 operates over a path from ground, contacts of relays 15M, 15Z1, 15Z2, 15Z3, winding of relay 15W4 connected to battery.

Ground is applied at the contacts of relay 15M to conductor TS1 to advance the remote signal circuit through the operation of relays 7M and 7W4. The path of the operation of relay 7W4 may be traced from ground, contacts of relays 7RL1, 7M, 7Z1, 7Z2, 7Z3, winding of relay 7W4 to negative battery. Operation of relay 7W4 results in the operation of relay 6TK0 in the register circuit to indicate that trunk 10 has been selected over a path from negative battery, winding of relay 6TK0, contacts of relays 7TR, 7Z3, 7Z2, 7Z1, 7SRA, 7S3A, 7S2, 7S1A, 7CK, 7W4, conductor 601, contacts of relays 7M, 7RLS to ground.

If trunk 09 or 19 had been selected, a different operating sequence is required as will be explained hereinafter.

In the present illustration, operation of relay 6TK0 completes an operating path for relay 4SMK which may be traced from ground, winding of relay 4SMK, normal contacts of relays 6TK9 through 6TK0, contacts of select magnets 5SMB6, 5SMB8 (B0), resistance 45 to negative battery.

IIA–16. SELECTION OF TRUNK 09 OR 19

As indicated heretofore, the signal relay combinations for trunks 09 and 19 are the same. To distinguish between the two trunks in the same group, when trunk 09 or 19 is the selected trunk, the control circuit applies minus 48-volt battery in series with approximately minus 48 volts across capacitor 152 to lead RS1 of a polarity which causes relay 7RR to operate. This is followed by the operation of relay 7TR over a path including negative battery, winding of relay 7TR, contacts of relays 7Z1, 7RR, 7RLS to ground. The minus 96-volt polarity to conductor RS1 results from the operation of contacts of relay 150TR connected between resistance 153 and conductor RS1 at the control unit. Since capacitor 152 was previously charged to minus 48 volts at the left-hand side thereof and since a minus 48-volt potential step is applied to the right-hand side, a composite voltage of 96 volts is developed across the capacitor. At approximately this time, the control circuit removes the battery potential from conductor RS1 at the contacts of relay 150TR. It is to be noted that the operation of relay 15M previously referred to results in the release of relay 150TR. Relay 7RR releases and in the register circuit the contacts of relay 7TR (the transfer relay) open the operating path over relay 6TK0 and permit only relay 6TK9 to operate when none of the signal relays is operated. Relay 4SMK now operates over a path similar to that traced above when relay 6TK0 is operated.

IIA–17. RELEASE OF LINE RELAY AT REMOTE UNIT

After the operation of relay 4SMK a path may be traced for the operation of relay 5C0K from ground, winding of relay 5C0K, contacts of relay 6DG1, winding of relay 5C099, contacts of relays 6B4, 6A5, 6CG1, 4SMK, resistance 55 to negative battery. The contacts of relay 5C0K complete an operating path for relay 5HMB10 from ground, contacts of relay 6DG1, winding of relay 5HMB10, contacts of relays 6TK0, 6CG1, 4SMK, 5C0K, resistance 51 to negative battery. Relay 5HMA10 operates in parallel. When relay 5C099 releases, relay 2L99 is released at the opening of the contacts of relay 5C099 in series therewith.

The hold magnet having been operated, since it is magnetically latched, may not be released until a pulse of the appropriate polarity is applied during a disconnect operation. It will be noted that the control unit has previously operated its hold magnet in order that the line requesting service may be identified at the control unit, if any trouble arises during the connection.

IIA–18. HOLD MAGNET CHECK AT REMOTE UNIT

Relay 4HMK now operates over a path including negative battery, resistance 41, winding of relay 4HMK, contacts of relays 5HMB10, 5HMA10, 6TK0, 6CG1, 4SMK to ground. This verifies that the correct relays have been operated.

Relay 7CK now operates as a result of the operation of relay 4HMK over a path which may be traced from ground, winding of relay 7CK, contacts of relay 4HMK, resistance 74 to negative battery.

As usual, the contacts of relay 7CK apply battery to signal lead RS1 to indicate to the control unit that the circuit may be released. Relay 7CK opens the operating path to the register permitting relay 6TK0 to release. The latter relay causes the release of relay 4SMK at the contacts of relay 6TK0. Relay 5C0K releases at the contacts of relay 4SMK.

IIA–19. RELEASE OF CONTROL AND REMOTE UNITS

As indicated above, the application of battery potential to lead RS1 at the contacts of relay 7CK causes the operation of relays 13RK1 and 13RK2 in the usual manner. At this time, relay 10RL1 operates over a path from negative battery, winding of relay 10RL1, contacts of relay 13RK2, 15M, 10MK, 14HMK, 12CG1, 15Z3 to ground. Operation of relay 10RL1 causes the release of relay 15SB1. In addition, relay 15M is released at the contacts of relay 10RL1. Release of relay 15M causes the release of relay 10MK at the contacts of relay 15M and relay 15W4 is similarly released. This path may be traced over cable 10–12 to FIG. 12 and the contacts of relay 15M over conductor O. It will be noted that all of the signal relays previously operated would be released but since none of the signal relays was operated, none is released. Operation of relay 10RL1 supplies a 96-volt potential to conductor TS1 in a manner similar to that described above, when relay 150TR operates. This is accomplished by connecting charged capacitor 154 in series with the negative battery connected to resistance 153 to apply a signal pulse to the remote unit to operate relay 7RLS.

The contacts of relay 10RL1 in series with the contacts of relay 10M open the operating path for relay 7M which releases and in turn release relay 7W4. The relays which are released when relay 7RLS operates include relays 7TR, 7W1, 7W2, 7W3, 6CG1, 6B4 and 6A5.

Release of relays 7W1–7W3 cause release of relays 7Z1–7Z3, respectively. Release of relay 6B4 results in the release of steering level select magnet 5SMB8 and release of relays 6B4 and 6A5 result in the release of relay 4MK.

When each of the above relays has been released, relay 4HMK releases when all of the contacts in its locking path are released. Release of relay 4HMK causes the release of relay 7CK. The latter relay as usual removes battery from signal lead RS1 to the control circuit to indicate that the remote unit has released.

Release of relays 13RK1 and 13RK2 provides a path for the operation of relay 10RL2 which may be traced from negative battery, winding of relay 10RL2, contacts of relays 16DIS14, 16DIS04, 10RL1, 13RK2, 10HSK1 to ground. Operation of release relay 10RL2 results in the release of relays 15W1 through 15W3, 12CG1, 12A5, 12B4, 16SR1. Select magnets 11SMC4 and 11SMC9 are released in view of the opening of the contacts of relay 12CG1, or 12A5, or 12B4 in series therewith. Relays 15Z1 through 15Z3 are released at the contacts of the associated relays 15W1 through 15W3. Relay 10SMK releases after the release of relays 15W1 through 15W3, 12CG1 and the select magnets.

Relay 11C0K1 releases at the contacts of relay 10SMK. It will also be noted that relay 11C0K1 would also release at the opening of any of the contacts of relays 12A—, 12B—, etc. Relay 11C0K2 releases when relay 11C0K1 releases.

The release of relay 12CG1 releases relay 16HS10 which in turn opens the operating path of relays 14HMK and 10HSK1.

It will be noted that the shunting path of the diode shunting relay 8TB10 makes it slow to release so that relay 8TS10 is operated, thereby holding relay 8TB10 operated. The path for operating relay 8TS10 may be traced from negative battery on ring conductor R99, through the crosspoint normal contacts of relay 16HS10, winding of relay 8TS10, over the ring conductor of the trunk to the remote unit through the equivalent crosspoints in the remote unit, the subscriber's loop and subset, the tip conductor of the trunk over a similar path to ground in the central office. Release of relay 15Z1 permits connection of battery to the signal leads over a path which may be traced from negative battery, resistance 151, contacts of relays 15Z1, 15Z1, 15RR1, 16DIS04, 16G1, 15Z1 to the signal relays. A similar path may be traced for the signal relays on conductor RS1. This results in the operation of sensitive relays 13S2, 13S4, 7S2, 7S4 which is the normal signaling condition.

Relay 16SRP1 is now released at the contacts of relay 15Z1. When all relays are released and relays 13S2 and 13S4 are operated, the release relays themselves, 10RL1 and 10RL2, release.

Relay 7RLS in the remote unit releases when all of the remote unit relays are released, and relays 10RL1 and 10RL2 are released. This completes release of the common equipment on a service request call and the equipment in the concentrator is ready to serve another request.

It will be noted that although all of the concentrator common equipment has released, the magnetic latching properties of the hold magnets maintain the connection cut through the concentrator.

IIB. Detailed Description of Terminating Call

IIB-1. SEIZURE OF CONTROL CIRCUIT

When a terminating call is originated at the central office ground is placed on the sleeve lead. Assuming relay 2L99 is associated with the called line (for illustrative purposes line 99 is the called line) sleeve relay 8SL99 will be operated. This results in the operation of relays 9LA11 and 9LB13. The path for the operation of relay 9LA11 may be traced from ground, contacts of relay 8SL99, winding of relay 9LA11, contacts of relays 9LA10, 9LA06, 16TER1, resistance 94 to negative battery. Relay 9LB13 operates over the contacts of relay 9LA11, resistance 93, contacts of relay 8SL99, winding of relay 9LB13, normal contacts of relays 9LB13, 9LB17, 9LB13, 9LB09, resistant 95 to negative battery.

Operation of relay 9LB13 closes an operating path for relay 16TP1 over the contact of relay 16TGB1 over a path from battery, resistance 94, contacts of relays 16TER1, 9LA06, 9LA10, 9LA11, conductor TP1, contacts of relay 16TGB1, winding of relay 16TP1, contacts of relays 16TP0, 16SRP1, 16SRP0, 16DP0 to ground. It will be noted that relay 16TGB1 will have operated if all trunks were busy in group "1." Relay 16TP1 closes a path for the operation of relay 16TER1 which may be traced from ground, contacts of relays 10RL2, 15Z1, 16TP1, winding of relay 16TER1 to negative battery. Relay 16G1 now operates over the contacts of relay 16TER1. Relay 15RR1 operates over a path from negative battery, winding of relay 15RR1, contacts of relays 16TER1, 16G1, 16G0 to ground. When relay 15RR1 operates a 96-volt potential is placed on lead RS1 at the contact of relay 15RR1 by putting capacitor 152 in series with the negative battery connected to resistance 153 to signal the remote circuit that a call is being initiated. This causes the remote circuit to change the resistance ground on the signal relays to a solid ground as explained herein. Specifically, at the remote unit, the application of the 96-volt potential results in the operation of relay 7RR over conductor RS1. Relay 7RRA operates over a path including the contacts of relays 7Z1, 7RR, 7RLS to ground.

The signal relays at the control unit are now released at the contacts of relay 15RR1. When relay 15RR2 operates as a result of the operation of relay 15RR1, battery is connected to the signal leads over a path including negative battery, resistance 151, contacts of relays 13RK2, 15Z1, 15RR2, resistance 155, contacts of relays 15Z1, 16DIS14, 16G1, 15Z1 to the windings of the signal relays. This results in the operation of relays 13S2 and 7S2 in view of resistance 155. A path for the operation of relay 13S4 may be traced similarly including the contacts of relays 16DIS14, 10T1, 16G0 and 15Z1.

It will be noted that the signal relays 7S2, 7S4, 13S2, 13S4 will all release at the contacts of relay 15RR1 before the new signal combination is applied to the signal relays.

A path is now closed for the operation of relay 15M from negative battery, winding of relay 15M, contacts of relays 15RR2, 15Z1, 13RK2, 10RL1, 16G1, 16G0 to ground.

IIB-2. REGISTRATION OF GROUP INFORMATION AT THE CONTROL UNIT

Operation of relay 15M places ground potential in the usual manner on signal lead TS1 to signal the remote unit to advance the sequence circuit. In addition, relay 15W1 is operated at this time. Relay 7M operates as a result of the operation of relay 15M to operate relay 7W1. Operation of relay 15W1 causes the operation of relay 12CG1 in the register circuit over a path from negative battery, winding of relay 12CG1, contacts of relays 15Z1, 12S3A, 12S2A, 12S1A, 15M, 13RK2, 15Z1, 15W1 to ground. Relay 10CCK now operates to indicate the appropriate operation of relay 12CG1 over a path from ground, winding of relay 10CCK, contacts of relays 15Z1, 16DIS16, 12CG1, 12CG0, 16DIS06, 15W1, resistance 101 to negative battery. Relay 16TST1 operates over a path from ground, winding of relay 16TST1, contacts of relays 16HS19, 16HS10, 12CG1, resistance 161 to negative battery. In the interim, in the control unit, relay 7RR releases and relay 6CG1 operates over a path similar to that described above for an originating call. Relay 7CK operates to check the operation of relay 6CG1 over a path also similar to that for a service originating call. As usual, operation of relay 7CK causes the operation of relays 13RK1 and 13RK2 in the control unit.

IIB-3. TRUNK SELECTION AT CONTROL UNIT

The procedure in selecting a trunk is the same as that heretofore traced for an originating call and need not be

repeated in detail. It is sufficient to indicate that relay **16HS10** is operated if it is assumed that trunk **10** is selected, this time over a path from ground, winding of relay **16HS10**, contacts of relays **16TST1**, **12CG1**, **8TB10**, **14HMA10**, resistance **164** to negative battery. Also in the manner similar to that described above, relay **16TST1** now releases at the contacts of relay **16HS10** and relay **10HSK1** operates in the manner described above as does relay **8TB10**.

Relay **15M** as usual releases in view of the opening of contacts of relays **13RK2** and **10CCK**, in turn causing the release of relay **7M** at the remote unit. These operations result in the operation of relay **15Z1** at the control unit, and relay **7Z1** at the remote unit, respectively. Also the signal relays are released in view of the opening of the contacts of relay **15Z1** in series with battery connected to resistance **151** at the control unit. Relay **10CCK** also releases at the contacts of relay **15Z1** and relay **7CK** releases at the contacts of relay **7Z1**. Again the contacts of relay **7CK** in series with conductor **RS1** result in the release of relays **13RK1** and **13RK2**.

The remainder of a terminating call description including the transmission of the "B" information, the registration of the "B" information, transmission of "A" information and registration of "A" information are similar to that described above. The exception of course resides in the fact that the identification of the line—in this case the called line—emanates from the control unit in lieu of the remote unit.

The transmission of the trunk information is also similar to that described above for a service request call and the release of the concentrator equipment is similar to that described above with the exception that the operation of relay **10RL2** causes the release of relay **16TER1** in lieu of relay **16SR1**. Release of relays **15RR1**, **15RR2** is caused by the operation of relay **10RL1**. Also the release of relay **16TER1** enables the operation of relays **9LA—** and **9LB—** if another request is made on a different line. Obviously relay **16SRP1** does not release as a result of the release of relay **15Z1** as shown for a service request call since relay **16SRP1** does not operate on a terminating call.

IIC. Disconnect Call

When a subscriber disconnects, relay **8TS10** (again assuming a subscriber to be at substation **2L99** and the trunk to be trunk **10**) releases and opens a holding path for slow release relay **8TB10** associated with the call. However, relay **8TB10** has another holding path from the sleeve of the line appearance through the normal contacts of relay **16HS10**, resistance **83** and diode **84**. Therefore relay **8TB10** remains operated until the central office disconnects and removes ground from the sleeve. When relay **8TB10** releases, a path is closed to operate relay **16DP1** from ground, contacts of relay **16DP0**, winding of relay **16DP1**, contacts of relays **15TLC1**, **10TM3**, diode **10**, contacts of relays **8TB10**, **14HMB10**, resistance **164** to negative battery.

It will be noted that this operation can occur only if the trunk load control relay **15TLC1** is operated as explained herein. Otherwise the trunk is not released and the line remains cut through.

IIC–1. TRUNK HOLD CONTROL

It will be noted that relay **15TLC1** operates only after five hold magnets have been operated. This allows four lines to be connected to the central office at all times and disconnection occurs only when the fifth hold magnet is operated, resulting in the operation of relay **15TLC1**. As shown herein the trunk to be disconnected is determined by the preference control circuit including relays **16HS—**.

Relay **15TLC1** is back-biased by resistance **155** in series with the secondary winding. Each hold magnet cuts in a 12,000-ohm resistor in parallel with the primary winding. Therefore four hold magnets supply a total resistance of 3,000 ohms which just balance the current through the primary winding. The fifth hold magnet reduces the resistance sufficiently to cause relay **15TLC1** to operate.

IIC–2. IDENTIFICATION OF LINE ON DISCONNECT CALL

Operation of relay **16DP1** causes the operation of relay **16D1** over a path from negative battery, winding of relays **16D1**, **16DP1**, **16SRP0**, **16SRP1**, **16TP0**, **16TP1**, **15Z1**, **10RL2**. Operation of relay **16D1** causes the operation of relays **16DIS10** through **16DIS16**. Relay **16G1** operates over the contacts of relay **16DIS15**. Relay **16TST1** operates from ground, winding of relay **16TST1**, contacts of relays **16HS19**, **16HS10**, **16DIS14**, resistance **161** to negative battery.

When relay **16TST1** is operated, a path is closed from negative battery, resistance **164**, contacts of relays **14HMB10**, **8TB10**, **16D1**, **16TST1**, windings of relay **16HS10** to ground. Corresponding paths may be traced for relays **16HS11–16HS19**, although only the path for relay **16HS19** is shown. Thus, all relays **16HS10–16HS19** of trunks requiring disconnect will attempt to operate. However, the lowest numbered relay **16HS10** will operate as a result of the preference chain to cause release of relay **16TST1**. Relay **10HSK1** operates only when one relay **16HS—** has operated in a manner similar to that described above. Thus relay **10HSK1** has operated and test relay **16TST1** released. It now remains to operate the sleeve relay **8SL99** associated with the line connected to the trunk selected for release. This path may be traced from negative battery, winding of relay **8SL99**, contacts of relay **16DIS14**, sleeve lead **S99** through the cross-point contacts, and relays **16HS10**, **10HSK1**, **16DIS16** to ground. Operation of sleeve relay **8SL99** results in the operation of the associated lockout relays in a manner analogous to that on a terminating call. As a result, relays **9LA11** and **9LB13** are operated. It will be noted that the contacts of relay **16DIS14** prevent an extension of the ground condition to the sleeve lead of the central office to falsely operate the conventional sleeve relay thereat.

IIC–3. TRANSMITTING GROUP AND CLASS OF CALL INFORMATION

Relay **10HSK1** which was previously operated causes the operation of relay **14HMK** over a path from ground, windings of relays **14HMK**, **14HMC10**, **16DIS15**, **16HS10**, **10HSK1**, resistance **141** to negative battery. Relay **14HRK** now operates from ground, contacts of relays **14HMK**, **16DIS16**, winding of relay **14HRK** to negative battery. Relay **15RR1** now operates over a path from negative battery, winding of relay **15RR1**, contacts of relays **10HSK1**, **16DIS14**, **10RL1**, **16G1**, **16G0** to ground. As a result of the operation of relay **15RR1**, a minus 96-volt potential is applied to the conductor **RS1** by placing capacitor **152** previously charged to minus 48 volts in series with a minus 48-volt source connected to resistor **153**. This is a signal to the remote unit which results in the operation of relays **7RR** and **7RRA** in the manner described heretofore. Moreover, relay **15RR2** operates over an obvious path on the contacts of relay **15RR1**.

At the same time, the contacts of relay **15RR1** remove battery from the signal conductors to release the signal relays and the auxiliary relays. Operation of relay **15RR2** results in the application of battery potential to the signal relays in the manner described heretofore. This results in the re-operation of the signal relays. The particular signal relays to be operated are, of course, dependent on the line identification. In this particular instance it will be seen that relay **13S4** operates at the control unit and relay **7S4** operates at the remote unit. The information indicating the particular signal relays operated is set forth in detail in Table 3 appended hereto. To enhance clarity the specific circuit path will not be repeated in detail.

The mark relay **15M** at the control unit now operates over a path from negative battery, winding of relay **15M**,

contacts of relays 15RR2, 15Z1, 13RK2, 10RL1, 16G1, 16G0 to ground. In addition, operation of relay 15RR2 removes the minus 96-volt potential from conductor RS1. Relay 7M at the remote unit follows the operation of relay 15M at the control unit in the usual manner and the sequence relays 15W1 and 7W1 are operated. Relay 10CCK now operates over a path from ground, winding of relay 10CCK, contacts of relays 15Z1, 16DIS16, 12CG1, 12CG0, 16DIS06, 15W1, resistance 101 to negative battery. Relay 6DG1 at the remote unit now operates from negative battery, winding of relay 6DG1, contacts of relays 7Z1, 7S4A, 7S3A, 7S2, 7S1A, 7CK, 7Z1, 7W1, conductor 601, contacts of relays 7M, 7RLS to ground. Operation of relay 6DG1 causes operation of relay 7CK over a path similar to that traced above for relay 6CG1.

It will be noted that relay 7RR was released previously when the voltage supplied to lead RS1 was small enough or removed.

As usual, the operation of relay 7CK causes the operation of releases 13RK1 and 13RK2. The latter, in turn, causes the release of relay 15M which, in turn, causes the release of relay 7M at the remote unit and, again, both sequence circuits are advanced by the operation of relays 15Z1 and 7Z1. Relay 10CCK releases when relay 15Z1 operates and relay 7CK releases when relay 7Z1 operates. Release of relay 7CK, as usual, results in the release of relays 13RK1 and 13RK2 and all of the signal relays previously operated release at the contacts of relay 15Z1.

IIC-4. REGISTRATION OF "B" AND "A" INFORMATION

Release of relay 15M results in the operation of relay 15SB1 over a path from negative battery, winding of relays 15SB1, 16SR1, 16SR0, 15Z1, 15Z3, 10CCK, 13RK2, 10RL1, 16G1, 16G0 to ground. Operation of relay 15SB1 causes relay 15M to be re-operated over a path including negative battery, winding of relay 15M, contacts of relays 15RR2, 15Z1, 15ZB1, 10CCK, 10RL1, 16G1, 16G0 to ground. Battery potential is applied to the signal leads at the contacts of relay 15SB1 as described above. This time the signal relays will be operated in accordance with the operated relays 9LB– at the control unit and 3LB– at the remote unit. Since relay 9LB13 was operated the particular signal relays which are operated are 13S2, 13S4, 7S2, 7S4 and the auxiliary relays therefor, as indicated in Table 3.

As indicated above, relay 15M operates when relay 15SB1 operates, causing the operation of relay 7M and the operation of relays 15W2 and 7W2. At the control unit, register relay 12B4 is now operated over a path similar to that described above for a terminating call. In a like manner relay 6B4 in the remote unit is operated to complete the registration of the "B" information and relays 10CCK and 7CK, the check relays, operate to check that one and only one "B" relay is operated. Again, relays 13RK1 and 13RK2 are operated at the contacts of relay 7CK, and relay 5SMB8 in the remote unit operates at the contacts of relay 6B4 in a manner described above for a service request call and also for a terminating call. The signal relays which were previously operated are now released by the removal of battery from those relays at the contacts of relay 13RK2. Relays 15M and 15SB1 are also released in consequence of the operation of relays 13RK2 and 10CCK in FIG. 15.

As usual, relay 7M follows the release of relay 15M and both sequence circuits are advanced by the operation of relays 15Z2 and 7Z2 in the usual manner. Again, relays 7CK and 10CCK release at the contacts of relays 15Z2 and 7Z2 and, in turn, cause the release of relays 13RK1 and 13RK2.

Operation of relay 15Z2 results in the operation of relay 10TM3 over a path from ground, resistance 105, condenser 106, contacts of relay 15Z2, winding of relay 10TM3 to negative battery. Relay 16DP1 now releases at the contacts of relay 10TM3 and relay 16TP1 operates over the contacts of relay 16DP1. This includes a path from ground, contacts of relays 16DP0, 16DP1, 16SRP0, 16SRP1, 16TP0, winding of relay 16TP1, contacts of relay 16TGB1, conductor TP1, contacts of relays 9LA11, 9LA10, 9LA06, 15Z3, resistance 94 to negative battery.

Relay 15SB1 now re-operates over the contacts of relays 13RK2 and 10CCK and, in turn, causes relay 15M to operate and battery is again applied to the signal relays, this time in accordance with the specific relay 9LA—, since, in this case, relay 9LA11 has been operated. The particular signal relays which are operated are 13S1, 13S2, 7S1 and 7S2. The signal relays are operated in the manner similar to the paths traced heretofore.

Also, in accordance with previous operation, relay 7M operates at the remote unit following relay 15M and both sequence circuits are advanced this time by the actuation of relays 15W3 and 7W3.

Now register circuit relay 12A5 operates at the control unit and relay 6A5 at the remote unit in the manner described heretofore on an originating call and a terminating call. Relay 4MK operates to check the operation of the "B" relay, "A" relay and the group relay in the manner described heretofore. Similarly relay 10MK operates at the control unit to verify the accuracy of registration in the manner described heretofore for an originating call. At the control unit, select magnet 11SMCM operates, although this function is not essential to this particular aspect of the concentrator operation since a disconnect call is involved.

It will be noted that at the remote unit, select magnet 5SM6 is also operated although this operation is also not essential.

At the remote unit, relay 7CK operates over a path from ground, winding of relay 7CK, contacts of relay 4HMK, resistance 74 to negative battery. As usual, relay 7CK causes the operation of relays 13RK1 and 13RK2. Operation of the latter relay results in the release of relays 15M, 15SB1 and the signal relays in view of the removal of battery from the signal relays at the contacts of relays 13RK2 and 10CCK.

Again, relay 7M releases at the control unit in view of the release of relay 15M and the sequence circuits at both units are advanced by the operation of relays 15Z3 and 7Z3. Operation of the latter relay causes the release of relay 7CK and, therefore, the release of relays 13RK1 and 13RK2 and the operation of relay 15Z3 causes the release of relays 10MK and 10CCK. Relay 10SMK is now operated over a path similar to that described above for checking on a service request and terminating call with the exception that the path is now continued over the contacts of relays 16DIS15, 10RL1, winding of relay 10SMK to ground.

Again, it will be assumed that trunk 10 is the trunk illustratively chosen for disconnect. At the control unit relay 15SB1 is operated in the manner described heretofore over the contact of relay 10CCK. Relay 15M now is operated at the contacts of relay 15SB1 and, as usual, relay 7M operates at the remote unit. The signal relays are now operated—this time to reflect the appropriate trunk information and, since it has been assumed that trunk 10 is the selected trunk, none of the signal relays is operated as demonstrated in the table appended hereto.

Operation of relay 15M causes the operation of relay 7M in the usual manner which causes the advance of the sequence circuits, this time relays 15W4 and 7W4.

It will be noted that if trunk 09 or 19 was selected, a different procedure would be required as indicated heretofore with respect to an originating and terminating call. At the remote unit the operation of relay 7W4 causes the operation of relay 6TK0 in the manner described heretofore and relay 4SMK is now operated. The path for the operation of the latter relay is similar to that described

above with the variation that contacts of relay 6DG1 are included in the operating path in lieu of the contacts of relay 6CG1.

At this time, relay 5C099 is operated at the remote unit, also in the manner described heretofore, with the variation that the relay 6CG1 is normal and relay 6DG1 is operated. This interaction of the two relays at this time causes a reversal of potential to the magnetically latched cut-off relays to operate the relays. Relay 5C0K now operates in series with the winding of relay 5C099. Operation relay 5C0K causes the release of the remote unit hold magnets 5HMA10, 5HMB10.

When relay 5C0K operates at the remote unit the pulse applied to the hold magnet is opposite in polarity to that during a service request or terminating call and causes the release of those magnets.

Release of the hold magnets removes the shunt from relay 4HMK which allows that relay to operate over a path from negative battery, resistance 41, winding of relay 4HMK, contacts of relays 5HMB10, 5HMA10, 6TK0, 6DG1, 4SMK to ground. At this time, relay 7CK operates to apply battery to the signal lead RS1 in the usual manner.

IIC-5. RELEASE

Relay 6TK0 now releases at the contacts of relay 7CK and relay 4SMK releases at the contacts of 6TK0, in turn, releasing relay 5C0K. In the interim, relays 13RK1 and 13RK2 release at the contacts of relay 7CK in the usual manner. At this time hold magnets 14HMA10, 14HMB10 and 14HMC10 release in view of the operation of the contacts of relays 13RK2 and 10MK. The path for the release of the hold magnets may be traced from negative battery, resistance 142, contacts of relays 10HSK1, 15W4, 13RK2, 14HRK, resistance 143, contacts of relay 16DIS14 to apply a potential opposite to that previously applied to the windings of magnets 14HMA10, 14HMB10 and 14HMC10. The path is completed over the contacts of relays 16HS10 and 8TB10 to ground.

Parenthetically, it may be noted at this juncture, that the magnitude of resistance 143 is designed to permit sufcient reverse current flow to release the magnets but not sufficient to re-operate the magnets in the opposite direction.

Relay 14HMK now releases at the contacts of magnets 14HMA10, 14HMB10 and 14HMC10. Significantly, it will be seen that the contacts of relay 16DIS15 shunting the above-referred-to contact paths insure that all of the three magnets, 14HMA10, 14HMB10 and 14HMC10, release.

Sleeve relay 8SL99 now releases in view of the opening of the crosspoint contacts in series therewith and, in turn, causes the lockout relays 9LA11 and 9LB13 to release.

The cut-off relay in the control unit 11C099 is now operated at the contacts of relay 14HMK over a path described heretofore with the exception that relay 12CG1 is normal and relay 16DIS14 is operated.

Relay 11C0K1 now operates over a path including windings of relays 11C0K1, 12CG1, 12A5, 12B4, winding of relay 11C099, contacts of relays 10HSK1, 16DIS14, 14HMK, 14HRK, 10SMK, resistance 117 to negative battery. Relay 11C0K2 now operates over an obvious path.

Relay 16TP1 now releases at the contacts of the register relays and relay 10RL1 operates over a path similar to that given above with the variation that the contacts of relay 16DIS14 are now included in the circuit.

After the operation of relay 10RL1 the release of the circuitry is similar to that described above with respect to a service request call with the exception that relays 12CG1 and 16SR1 were, of course, not operated. Instead, relay 10RL2 releases relay 16D1 which, in turn, causes the release of relays 16DIS10 through 16DIS16. Release of the latter relays opens the operating paths of relays 16G1 and 16HS10. Relay 14HRK releases when relay 10RL2 operates and either relay 16DIS14 or relay 14HMK releases.

The remote circuit also releases in a manner similar to that described above for a service request call, but releases relay 6DG1 in lieu of relay 6CG1.

IIC-6. TIMING CIRCUIT 10TM3

This timing circuit is used on disconnect calls to obtain a six-second interval between calls. This reduces the rate at which the remote unit battery will be discharged during a trouble condition. In addition, it permits other calls to be served during the trouble period.

More specifically, when relay 15Z2 operates, a path is closed for the operation of relay 10TM3 over the contacts of relay 16DIS14, contacts of relays 15Z2, 15Z2, winding of relay 10TM3 to negative battery. This also charges capacitor 106. Relay 10TM3 in operating partially closes an operating path for relay 10RL2. This insures that relay 10TM3 operates on disconnect calls. When relay 10RL2 operates, a holding path is closed through the contacts of relay 10TM3 to maintain relay 10TM3 operated unit the call is disconnected. Since the normally closed contacts of relay 10TM3 are now open in the operating path of relay 16DP1, disconnect calls are prevented from starting until relay 10TM3 again releases. The relay does not release until the capacitor 106 discharges—a period of illustratively six seconds.

IID. Service Denial Call

IID-1. SEIZURE OF CONTROL UNIT

When it is determined necessary to deny service to a line or to "lockout" the line as a result of a permanent line or fault condition, conductor TSL (FIG. 16) is cross-connected to the sleeve appearance of the line to be isolated. It will be assumed, again for illustrative purposes, that substation 2L99 is the station to be denied service. Initially, key 10T1 is operated to cause the operation of relay 10T1 which, in turn, places a ground potential on conductor TSL. This results in the operation of sleeve relay 8SL99 associated with the line (to be isolated in) over a path from negative battery, winding of relay 8SL99, contacts of relay 11C099, sleeve conductor S99, contacts of relay 16DIS14 to the central office line termination. The call now proceeds as a terminating call with the exception that the signal relays which are operated are determined by relay 10T1 to inform the remote unit that a service denial call is being made when the group information is sent. Thus, relays 9LA11 and 9LB13 are operated in the manner described heretofore, for a terminating call, as are relays 16TP1, 16TER1 and 16G1. Relay 15RR1 operates at the contacts of relay 16G1 and causes the operation of relay 15RR2 at the control unit and relay 7RR at the remote unit. Still following the sequence for a terminating call, signal relays 7S2, 7S4, 13S2 and 13S4 along wtth the auxiliary relays are released. Relay 15M operates at the control unit as does relay 7M at the remote unit and both sequence circuits are advanced by the operation of relays 15W1 and 7W1.

The signal relays which are operated as detailed by the appended Table 3 are 13S2, 13S4, 7S2 and 7S4 together with the auxiliary relays. Relay 12CG1 operates after the operation of the signal relays in the usual manner. Relay 16TST1 operates in the manner described heretofore for a terminating call and causes the operation of relay 16HS10 followed by the release of relay 16TST1 and the operation of relay 10HSK1. The latter relay causes the operation of relay 8TB10 as described above.

Relay 10CCK operates at the contacts of relay 12CG1 and causes the release of the contacts of relay 15M as well as relay 7M at the remote unit.

In the interim, it will be noted that relay 6T1 operated at the remote unit over a path including negative battery, winding of relays 6T1, 7Z1, 7S4A, 7S3A, 7S2, 7S1A, 7CK, 7Z1, 7W1, conductor 601, contacts of relays 7M, 7RLS

to ground. Relay 6CG1 thereafter operates over the contacts of relay 6T1 and a similar path.

Relay 7CK now operates over a path similar to that described above and causes the operation of relays 13RK1 and 13RK2 in view of the release of relays 15M and 7M at the contacts of relays 13RK2 and 10CCK. Relay 15Z1 is operated as is relay 7Z1 thereby releasing relays 10CCK and 7CK. As usual, all of the signal relays are released at the contacts of relay 15Z1, and relays 13RK1 and 13RK2 are released at the contacts of relay 7CK.

Thereafter it is noted that the trunk selection "B" information and the "A" information is transmitted in a similar manner to a terminating call.

After the select magnets have operated, relay 10CCK operates as explained heretofore for a terminating call. However, when relay 13RK2 operates to indicate the "A" information has been registered and relay 5C099 is released at the remote unit thereby denying service, a path is closed through the operated relay 10T1 to operate relay 10RL1. This path extends from ground, contacts of relays 10T1, 15W3, 13RK2, winding of relay 10RL1 to negative battery to cause the release of the control and remote unit concentrator equipment. Operation of relay 10RL1 causes the release of relay 15M to advance the sequence circuit by the operation of relay 15Z3. However, at this time relay 10SMK does not operate since its operating path includes the normally closed contacts of relay 10T1. This prevents the control circuit from operating the hold magnets which would allow a disconnect call to start thereby operating relay 5C099 and restoring service.

IID–2. RELEASE OF A SERVICE DENIAL CALL

Release of the relays used in establishing a call is similar to that described heretofore for the other calls with the exception that when relay 10RL2 operates an indication is given on lamp 10C0K over the contacts of relays 10RL2 and 10T1. Key 10T1 is then released to open the operating path of relay 10T1. Release of the latter relay causes ground to be removed from the lamp 10C0K and also causes a hold path for relay 10RL2 to be opened.

The leads from the control circuit to the line appearance must be opened or the line appearance made busy to prevent terminating calls as explained herein.

When the service denied condition is to be removed the leads to the line appearances are re-connected and a terminating call is made to the subscriber's line. When an on-hook condition exists during the terminating call a disconnect call will be made if relay 15TLC1 is operated. If the latter relay is normal the subscriber will remain connected to the central office. Either condition will allow a subscriber to originate service request calls.

IIE. Preference Control

Two lockout chains are used to allow a call to complete if another call requests service. The first chain in the order of preference includes relays 16DP0/16DP1, 16SRP0/16SRP1, 16TP0/16TP1, when relay 10TM3 is normal. If relay 10TM3 is operated, relay 16SRP0/16SRP1 is preferred since relay 16DP0/16DP1 cannot operate.

This first chain prevents a call associated with a less preferred relay from operating its preference relay. A call associated with a higher preferred relay can operate its preference relay but the second chain prevents the preferred preference relay from starting the call. The second chain in the order of preference includes relays 16TER1/16TER0, 16SR1/16SR0, 16D1/16D0. The second chain is the reverse of the preference in the first chain. As a result, even though a higher preferred relay was operated in the first chain while a call was in progress, the call will be completed before the preferred relay can operate its associated relay to the second chain to start a call.

IIF. Alarm Circuit

The alarm circuit is controlled by slow release relay 15TM1 and the associated capacitor 156. When the circuit is normal, relay 16G1/16G0 is normal and ground is connected to relay 15TM1 and capacitor 156. Relay 15TM1 is held operated and capacitor 156 is charged by the potential source 157 through resistor 158 and diode 159. When relay 16G0/16G1 operates and removes the ground, relay 15TM1 releases after capacitor 156 discharges sufficiently to reduce the current in the circuit below the hold current providing relay 16G0/16G1 has not released. Release of relay 15TM1 causes relay 10RL1 to operate and a path to be closed for operating relay 10TM3 and charging capacitor 106 on a disconnect call. When relay 15TM1 releases a number of other relays (not shown) may be operated and locked in the operated condition to indicate the state of the call when the alarm condition occurred. The locked relays may be subsequently released by a key or other appropriate means.

For a fuller description of the operation of time delay relay 15TM1, reference may be made to Patent 2,636,931 of M. E. Krom of April 28, 1953.

IIG. Line Lockout Circuit Operation on Simultaneous Calls

It will be assumed for illustrative purposes that simultaneous terminating calls have been made to the concentrator subscribers having substations 99 and 86. As a result, sleeve relays 8SL86 (not shown) and 8SL99 will be simultaneously operated. Relay 9LA10 operates over a path from ground, contacts of relay 8SL86, winding of relay 9LA10, contacts of relays 9LA10, 9LA11, 9LA10, 9LA06, 16TER1, resistance 94 to negative battery. Relay 9LA11 operates over a path including contacts of relay 8SL99 and a similar circuit. Assuming the relatively rare situation in which both relays operate precisely simultaneously, relay 9LA11 will ultimately release in favor of the relay 9LA10 in view of the contacts of relay 9LA10 opening in series with the path for relay 9LA11.

It will be noted that the operating path for relay 9LB09 is completed from ground, contacts of relays 9LA10, resistance 96, contacts of relays 8SL86, winding of relay 9LB09, contacts of relays 9LB09, 9LB17, 9LB13, 9LB09, resistance 95 to negative battery.

Moreover, relay 9LB13 associated with line 99 cannot operate since it was indicated that relay 9LA11 released and therefore opened the contacts of relay 9LA11 in series with relay 9LB13. This avoids the possibility of an ambiguous or invalid identification.

It will be noted that if two sleeve relays representing lines in the same LA group, for example relays 8SL86 and 8SL90, associated with relay 9LA10, are simultaneously operated, relay 9LA10 will be operated. However, in this event, either relay 9LB09 or 9LB13 will represent a valid identification. Either relay will lock out the other, but since both of these combinations with relay 9LA10 is a valid one the circuit function is legitimate.

It will now be assumed that relays 8SL86, 8SL95 and 8SL99 are simultaneously operated. Under these circumstances the preferred "LA" relay as indicated above is relay 9LA10. As a result, relay 9LB09 should operate (along with relay 9LA10) to give the coded identification for line 86. However, when relay 9LA10 operates a path now exists from ground, contacts of relay 9LA10, resistance 96, contacts of relays 8SL86, 8SL95, resistance 97, resistance 93, contacts of relay 8SL99, winding of relay 9LB13 over the path previously traced including the normal contacts of the "LB" relays and resistance 95 to negative battery. However, resistances 97, 96, 93, etc. are designed to be sufficiently high in magnitude relative to the usual impedance in the relay operating path to prevent relay 9LB13 from operating over this undesired path.

IIH. Trunk Overflow Indication

When all hold magnets are busy in group 0 or group 1, a path is closed to operate the corresponding relay

16TGB0/16TGB1 over an obvious circuit. The operated relay places ground on start lead ST to the ringing circuit 168 of FIG. 16 to initiate the operation thereof.

On a terminating call, assuming that line 00 is the called line, relay 8SL00 operates, followed by relays 9LA00 and 9LB00, as described for a terminating call previously. However, relay 16TP0 cannot operate when relay 16TGB0 is operated. A path is therefore available through lead 0FT and capacitor TGB0, contacts of relays 16TGB0 and 9LB00 to apply overflow tone to the ring conductor through the contacts of relay 8SL00. Moreover, the tip and ring leads of the line appearance are connected to tube 16TGB0 to trip ringing. When the central office equipment releases, ground is removed from the sleeve link, causing the release of relay 8SL00, followed by release of relays 9LA00 and 9LB00.

It is understood that the above embodiments are merely illustrative and that various modifications may be made by those skilled in the art without departing from the scope of the invention.

What is claimed is:

1. A universal telephone line concentrator system including a plurality of lines, a telephone central office, a plurality of trunks fewer in number than said lines connected to said office, remote switching means for connecting said lines to said trunks, and identification means in said remote switching means responsive to an off-hook condition on one of said lines for indicating the identification of said line, said identifying means including a first group of bistable devices arranged in a preference lockout chain, a second group of bistable devices arranged in a preference lockout chain, means for operating one of said bistable devices in said first group and one of said bistable devices in said second group to uniquely identify said line, and means connected to said first and second group to block the operation of said one bistable device in said second group until said one bistable device in said first group has operated.

2. A universal telephone line concentrator system including a number of substation lines, a telephone central office, a lesser number of trunks connected to said central office, remote switching means for connecting said lines to said trunks, and identifying means in said remote switching means responsive to an off-hook condition on one of said lines to indicate the identification of said line, said identifying means including a first group of bistable devices and a second group of bistable devices, means arranging said first group in a preference lockout chain, means arranging said second group in a preference lockout chain, means for operating a single bistable device in said first group and a single bistable device in said second group, and means in said second group effective when said single device in said second group is operated to preclude the operation of a less preferred or more preferred device in said second group.

3. An automatic telephone line concentrator system including a plurality of substation lines, a telephone central office, a lesser plurality of trunks connected to said office, remote switching means for connecting said lines to said trunks, a plurality of sensory devices individual to said lines at said remote switching means and operable to indicate the service condition thereof, and identifying means at said remote switching means, said identifying means including first and second groups of bistable devices, means for connecting said sensory devices to said bistable devices to operate a single bistable device in said first group and a single bistable device in said second group in response to the operation of one of said sensory devices, and means connected to said second group for preventing the operation of a bistable device in said second group until said single bistable device in said first group has operated.

4. A universal telephone line concentrator system including a plurality of substation lines, a telephone central office, a lesser plurality of trunks connected to said office, remote switching means for connecting said lines to said trunks, and identifying means in said remote switching means for registering the designation of an off-hook one of said lines, said identifying means including a group of bistable devices operative to register said identification, and means effective when a plurality of simultaneous off-hook conditions occur on said lines for limiting the operation to one of said bistable devices.

5. A universal telephone line concentrator system in accordance with claim 4 including means effective in response to the concurrent operation of two of said bistable devices to release one of said devices in accordance with a predetermined preference order.

6. A universal telephone line concentrator system including a plurality of lines, a telephone central office, a lesser plurality of trunks connected to said office, remote switching means for connecting said lines to said trunks, identifying means connected to said switching means and operative in response to an off-hook condition on one of said lines for indicating the identification of said line, sensory means connected to said lines and operable for indicating the service condition thereof, a first group of bistable devices, a second group of bistable devices, means responsive to the operation of one of said sensory means for actuating a particular bistable device in said first group, and means jointly responsive to the operation of said sensory means and said bistable device in said first group to operate a particular bistable device in said second group.

7. A universal telephone line concentrator system in accordance with claim 6 including means responsive to simultaneous off-hook conditions on a plurality of said lines and the concurrent operation of a plurality of bistable devices in said second group to release all but one of said devices in said second group.

8. A universal telephone line concentrator system including a plurality of substation lines, a telephone central office, a lesser plurality of trunks connected to said office, remote concentrator means for connecting said lines to said trunks, a plurality of sensory means individually responsive to an off-hook condition on said lines to indicate the service condition thereof, identifying means responsive to the operation of said sensory means to register the identification of said line according to a code, said identifying means including a first group of bistable devices and a second group of bistable devices, means for connecting said first group in a unidirectional preference lockout chain, means for connecting said second group in a lockout chain, means responsive to a plurality of simultaneous calling conditions on said lines to operate a plurality of said sensory means, means responsive to the operation of said plurality of sensory means to operate a single bistable device in said first group and a single bistable device in said second group for each of said sensory means operated, and means connected to said groups for preventing the operation of any bistable devices not representative of calling lines.

9. A universal telephone line concentrator system including line identifying means comprising a first group of bistable devices individually indicative of a portion of a line identification, a second group of bistable devices individually indicative of the remainder of said line identification, means for operating a bistable device in said first group and a bistable device in said second group to uniquely designate one of said lines, means for connecting a plurality of said bistable devices in said second group to a single bistable device in said first group in accordance with a code, means effective in response to a plurality of simultaneous identification requests for operating said single bistable device in said first group and a plurality of bistable devices in said second group connected to said single bistable device, and additional means for releasing all of said bistable devices in said second group but one.

10. A universal telephone line concentrator system in

accordance with claim 9 wherein said one bistable device to remain operated in said second group is determined in accordance with a preference code.

11. A universal telephone line concentrator system including a number of substation lines, a telephone central office, a lesser number of trunks, remote switching means for connecting said lines to said trunks, control switching means for connecting said trunks to said office, identifying means in said remote switching means responsive to an originating call on one of said lines to indicate the identification of said line, and identifying means in said control switching means responsive to a terminating call to one of said lines to indicate the identification of said called line, said identifying means including a first group of bistable devices and a second group of bistable devices, means connecting said first group in a preference lockout chain, means connecting said second group in a preference lockout chain, means for operating a particular bistable device in said first group and a bistable device in said second group to uniquely designate a line, and means connected to said first group to block the operation of a bistable device in said second group until said particular bistable device in said first group has operated.

12. A universal telephone line concentrator system in accordance with claim 11 including in addition means effective when said device in said second group is operated to preclude the operation of a less-preferred or more-preferred device in said second group.

13. A universal telephone line concentrator system including a plurality of lines, a lesser plurality of trunks, a central office, remote switching means for connecting said lines to said trunks, control switching means for connecting said trunks to said office, identifying means in said remote switching means effective in response to an originating call on one of said lines to identify said line, identifying means in said control switching means effective in response to a terminating call to one of said lines to identify said called line, said identifying means including a first group of relays and a second group of relays, said first group of relays being connected in a preference lockout chain, said second group of relays being connected in a preference lockout chain, and means effective during a simultaneous calling condition on a plurality of said lines to limit the operation of said identifying means to a single relay in said first group and a single relay in said second group.

14. A universal telephone line concentrator system including a plurality of telephone lines, a lesser plurality of trunks, a telephone central office, remote switching means for connecting said lines to said trunks, control switching means for connecting said trunks to said office, identifying means in said remote switching means effective during an originating call on one of said lines to identify said line, identifying means in said control switching means effective during a terminating call to one of said lines to identify said called line, said identifying means including a first group of relays each indicative of a portion of said line identification, a second group of corresponding relays individually indicative of the remainder of said line identification, means connecting said first group of relays in a preference chain, means connecting said second group of relays in a preference chain, means responsive to the simultaneous operation of a plurality of relays in said first group to release all but one of said relays, means responsive to the operation of a plurality of relays in said second group to release all but one of said relays, and means connected to said first group for preventing the operation of a relay in said second group until the corresponding relay in said first group has operated.

15. A universal telephone line concentrator system in accordance with claim 14 including in addition means effective in response to the operation of said relay in said second group to prevent the operation of a less-preferred relay in said second group.

16. A universal telephone line concentrator system in accordance with claim 15 including in addition means effective in response to the operation of said relay in said second group to prevent the operation of a higher-preferred relay in said second group.

17. A universal telephone line concentrator system including a plurality of substation lines, a plurality of trunks, a telephone central office, remote switching means for connecting said lines to said trunks, and identifying means in said remote switching means effective in response to an off-hook condition on one of said lines to indicate the identification thereof, said identifying means including a first group of relays connected in a lockout chain, a second group of relays connected in a lockout chain, means for operating a single relay in said first group and a corresponding single relay in said second group to uniquely designate one of said lines, impedance means connected to said relays in said second group, means connected to said relays in said first group for blocking the operation of a particular relay in said second group until the corresponding relay in said first group has operated, and means effective during a simultaneous calling condition on a plurality of said lines to insert said impedance means in the operating path of all said relays in said second group but said particular relay.

18. A universal telephone line concentrator system including a plurality of substation lines, a telephone central office, a lesser plurality of trunks connected to said office, remote switching means including a plurality of crossbar networks having magnetically latching contacts for connecting said lines to said trunks, control switching means including a plurality of crossbar networks having magnetically latching contacts for connecting said trunks to said office, a plurality of magnetically latching line relays at said remote switching means individually responsive to calling conditions on said lines to indicate the service condition thereof, a plurality of sleeve relays at said control switching means individually responsive on terminating calls to said lines to indicate the service condition thereof, identifying means at said control switching means and said remote switching means responsive to the operation of said respective relay means to register the identification of said line according to a code, said identifying means including a first group of relays connected in a unidirectional preference lockout chain, a second group of relays connected in a bidirectional preference lockout chain, means responsive to a plurality of simultaneous calling conditions on said lines to operate a plurality of line relays, means responsive to the operation of said plurality of line relays to operate a single relay in said first group and a single relay in said second group at said remote switching means uniquely representative of a particular line, means connected to said first group of relays and responsive to the operation of a particular line relay to operate a preferred relay in said first group, means jointly responsive to the operation of said particular line relay and said preferred relay in said first group to operate a preferred relay in said second group, means responsive to the operation of said preferred relay in said first group to preclude the operation of any other relays in said first group, and means responsive to the operation of said preferred relay in said second group to preclude the operation of any other relay in said second group, signal transmitting and receiving means at said remote switching means and control switching means responsive to said identifying means for bidirectional transmission of said identification and register means.

19. A universal telephone line concentrator system in accordance with claim 18 including in addition means responsive to the simultaneous operation of a plurality of relays in said first group to release all less-preferred relays.

20. A universal telephone line concentrator system in accordance with claim 19 including in addition means effective in response to the simultaneous operation of a

plurality of relays in said second group to release all less-preferred relays in said second group at said control and remote switching means for simultaneous registering of said identification in response to said signaling means.

21. A remote line concentrator system including a plurality of lines, a telephone central office, a lesser plurality of speech trunks extending from said office, a plurality of signal trunks extending from said office, remote switching means for connecting said lines to said trunks under control of said office, identifying means in said remote switching means for identifying said lines in response to service request conditions on said lines, said identifying means including a first plurality of relays and a second plurality of relays, means responsive to a service request condition on one of said lines for operating a particular relay in said first plurality and a particular relay in said second plurality to uniquely designate said line, said last-mentioned means including means responsive to the operation of said line relay to actuate said particular relay in said first plurality and means jointly responsive to the operation of said line relay and said particular relay in said first plurality to operate a particular relay in said second plurality of relays, means for connecting said first plurality of relays in a unidirectional preference lockout chain, means for connecting said second plurality of relays in a bidirectional lockout chain, and impedance means connected to said second plurality of relays to prevent the operation of said second plurality of relays over any path other than the associated relay in said first plurality, and signal means for transmitting said line identification to said office in response to the operation of said identifying means, said signal means including means for applying currents of high, intermediate and low levels to said signal trunks according to a code representative of said line identification.

22. A remote line concentrator system in accordance with claim 21 wherein said bidirectional lockout chain includes means responsive to the operation of a plurality of relays in said second plurality of relays to release all less-preferred relays.

23. A remote line concentrator system in accordance with claim 21 wherein said bidirectional lockout chain includes means effective upon the operation of a particular one of said relays in said second plurality to preclude the operation of all less-preferred and more-preferred relays.

24. A universal telephone line concentrator system including a plurality of lines, a lesser plurality of trunks, a telephone central office, remote switching means for connecting said lines to said trunks, control switching means, said remote switching means including a first plurality of line terminations individually connected to said lines, said control switching means including a second plurality of line terminations individual to said lines, a plurality of magnetically latching line relays at said remote switching means individual to said line relays, a plurality of magnetically latching cut-off relays at said remote switching means for isolating said line relays from said lines, a plurality of sleeve relays at said control switching means operative to indicate the service condition of said lines, a plurality of magnetically latching cut-off relays for isolating said sleeve relays from said second plurality of line terminations, crossbar networks in said remote and control switching means including a plurality of horizontal and vertical conductive paths, said horizontal conductive paths being connected to said line terminations and said vertical conductive paths being connected to said trunks, crosspoint contacts at the intersections of said paths, identifying means in said remote and control switching means responsive to the operation of said line and sleeve relays respectively to indicate said line identification, lockout means in said remote and control switching means responsive to the operation of said identifying means for registering said identification, said lockout means including a first group of relays and a second group of relays, means for operating a single relay in said first group and a single relay in said second group to uniquely designate one of said lines, means responsive to the simultaneous operation of a plurality of line relays for selecting one of said relays in said first group and one of said relays in said second group in accordance with a predetermined preference order, and connecting means responsive to the operation of said lockout means to extend a connection from said line designated by said relays over a path including said crosspoint contacts in said remote switching means, a selected trunk and said crosspoint contacts in said control switching means, said connecting means including magnetically latching means for holding said contacts operated indefinitely without continuous power drain.

25. A remote line concentrator system in accordance with claim 24 including in addition means in said control switching means operative in response to the simultaneous operation of a plurality of sleeve relays to select a single relay in said first group and a single relay in said second group indicative of a particular called line in accordance with a predetermined preference order, and means for extending a connection from said line termination individual to said called line in said control switching means to said termination in said remote switching means connected to said called line.

References Cited in the file of this patent

UNITED STATES PATENTS

2,325,877	Powell	Aug. 3, 1943
2,484,612	Dehn et al.	Oct. 11, 1949
2,532,097	Hersey	Nov. 28, 1950
2,621,256	Stehlik	Dec. 9, 1952
2,837,602	Lundkvist	June 3, 1958
2,854,519	Harris	Sept. 30, 1958
2,857,470	Faulkner	Oct. 21, 1958
2,916,557	Fleckenstein	Dec. 8, 1959