E. D. FALES.

AUTOMATIC COMMON BATTERY TELEPHONE SYSTEM.

APPLICATION FILED NOV. 6, 1906. RENEWED SEPT. 19, 1917.

1,268,069.

Patented May 28, 1918.

2 SHEETS—SHEET 1.

Fig. 1.

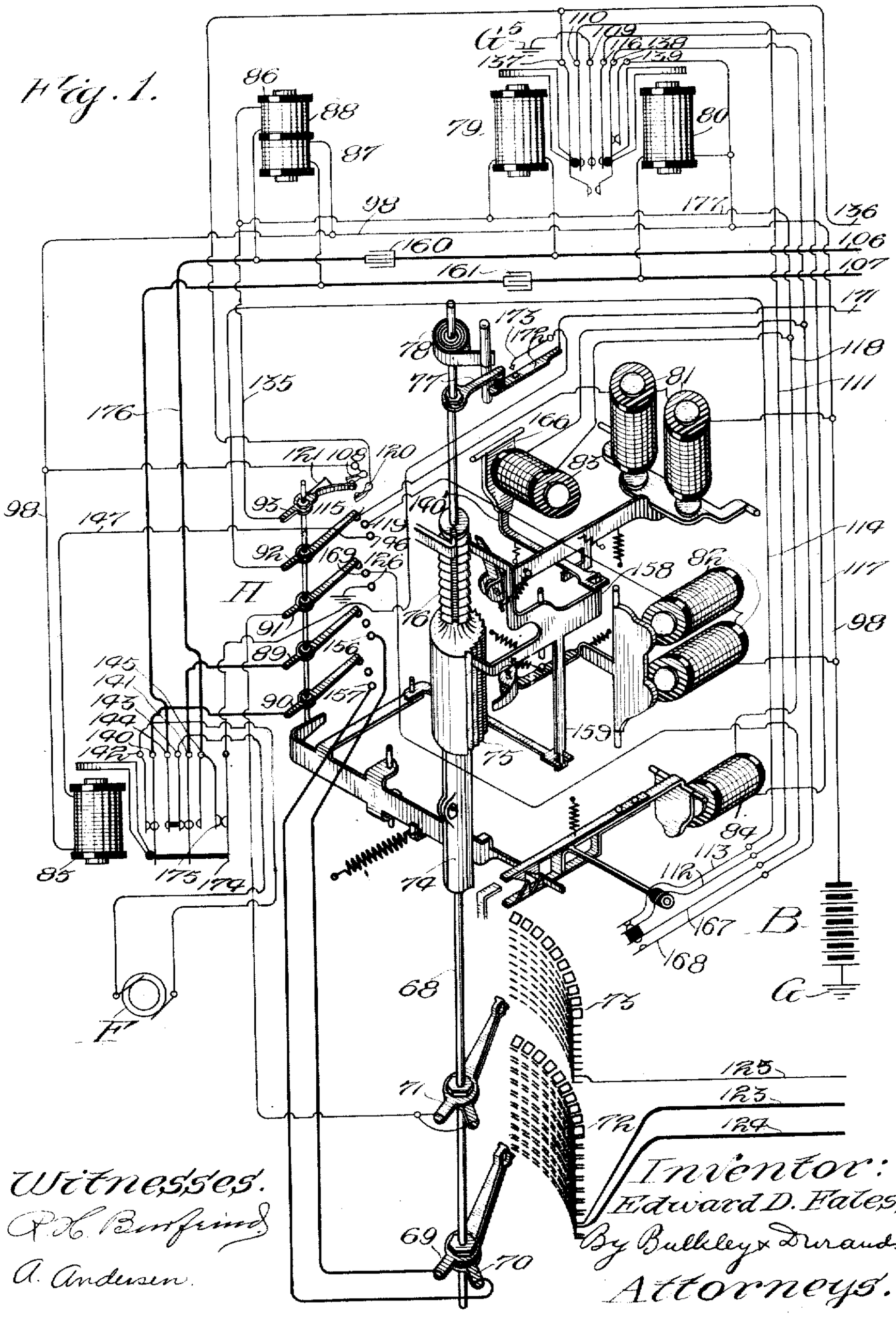

E. D. FALES.

AUTOMATIC COMMON BATTERY TELEPHONE SYSTEM.

APPLICATION FILED NOV. 6, 1906. RENEWED SEPT. 19, 1917.

1,268,069. Patented May 28, 1918.

2 SHEETS—SHEET 2.

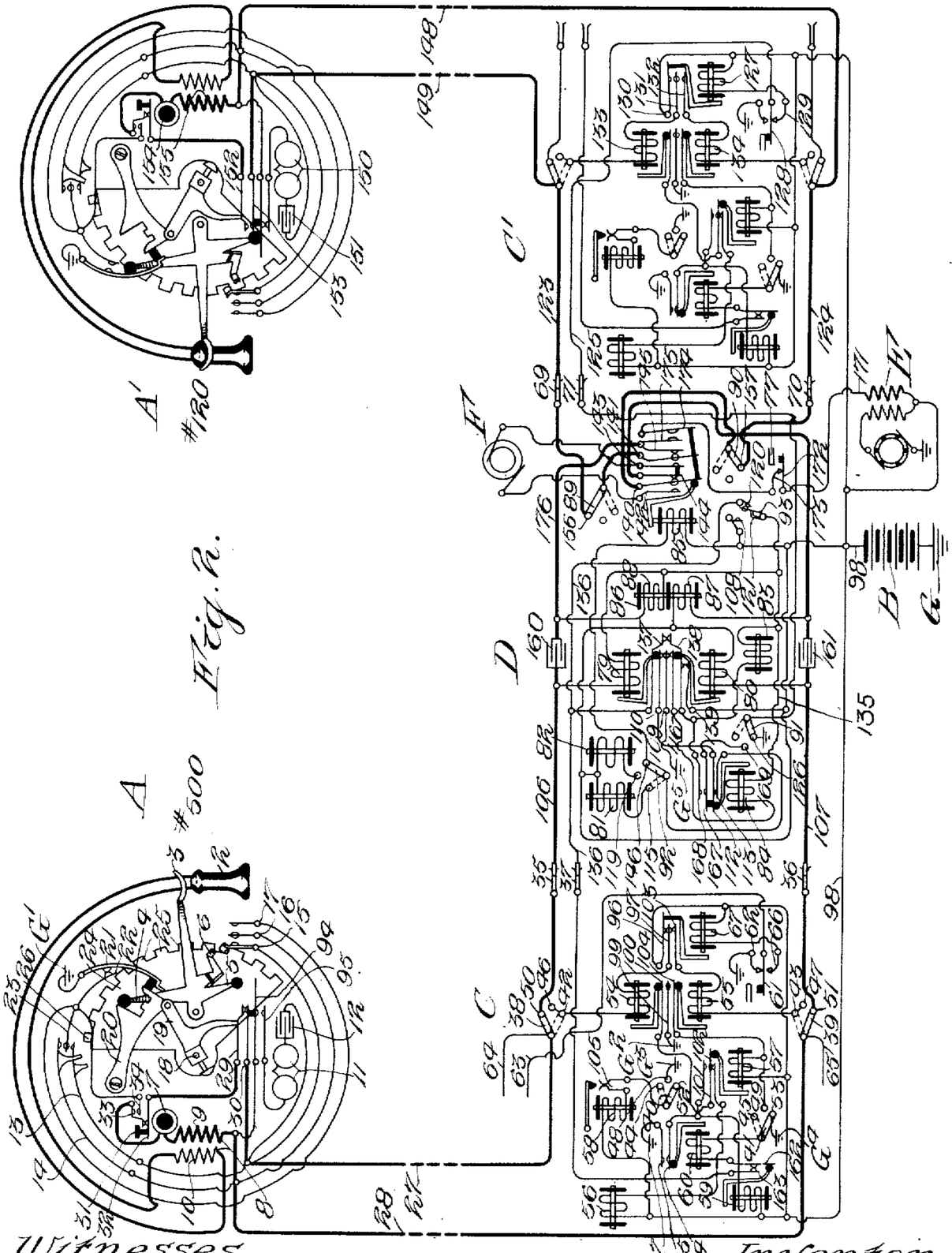

Fig. 2.

Witnesses.

A. Andersen.

R. L. Burfrind

Inventor.

Edward D. Fales.

By Bulkley & Durand.

Attorneys.

UNITED STATES PATENT OFFICE.

EDWARD D. FALES, OF CHICAGO, ILLINOIS, ASSIGNOR, BY MESNE ASSIGNMENTS, TO AUTOMATIC ELECTRIC COMPANY, A CORPORATION OF ILLINOIS.

AUTOMATIC COMMON-BATTERY TELEPHONE SYSTEM.

1,268,069. Specification of Letters Patent. Patented May 28, 1918.

Application filed November 6, 1906, Serial No. 342,259. Renewed September 19, 1917. Serial No. 192,222.

To all whom it may concern:

Be it known that I, EDWARD D. FALES, a citizen of the United States of America, and resident of Chicago, Cook county, Illinois, have invented a certain new and useful Improvement in Automatic Common-Battery Telephone Systems, of which the following is a specification.

My invention contemplates an improvement on the common battery telephone system disclosed in my prior application Serial No. 336,353, filed September 26, 1906.

The object of my present invention is to provide certain features of improvement, details of construction, combinations of elements and circuit arrangements tending to improve the general efficiency of an automatic common battery telephone exchange system, as well as to still further improve and simplify the connectors thereof.

To the foregoing and other useful ends, my invention consists in matters hereinafter described and claimed.

In the accompanying drawings, Figure 1 is a diagrammatic perspective view of one embodiment of my improved connector.

Fig. 2 shows diagrammatically a calling and a called substation connected by means of a central office equipment, in a system embodying the principles of my invention.

In the said office the calling substation #500 has allotted to it the first-selector C of the general type disclosed in United States Patent No. 815,321, issued March 13, 1906, to Keith, Erickson & Erickson. It will be seen that the central battery B has its positive terminal preferably grounded at G. The operating relays are, as hereinafter explained, normally connected to the non-grounded terminal of the said battery, so that the subscriber by grounding his line conductor may operate the said switches, as is usually the custom in systems of this class. In addition to the said first-selector C there is shown my improved connector switch D and another first-selector C′ allotted to the called line. Also, at E is shown a busy-signaling machine, and at F a ringer generator is shown. Substation #500 is shown as having operated the central office switches and established connection with the substation #120, which is shown in its normal position. The substation A may be of any suitable or approved type. The one in connection with which I have elected to illustrate my invention is an improvement on the substation disclosed in United States Patent No. 1,101,853, granted June 30, 1914, to Keith, Erickson and Erickson, and comprises a receiver 2, a switch-hook 3 for controlling the substation circuits, which controlling operations are accomplished through the medium of any suitable means, such as the cam arms 4, 5, and 6. The said substation comprises the usual transmitter 7, induction-coil 8 having the primary winding 9 and secondary winding 10, the ringer 11, and condenser 12 in the ringer circuit. Being an automatic substation it is provided with the usual vertical and rotary impulse springs 13 and 14 and the release springs 15, 16 and 17. Said substation is, of course, provided with a dial which is not shown but which is secured to the shaft 18, together with the locking dog 19. Furthermore, there is a locking cam 20 that locks the dog 19, while the receiver is on the switch-hook, to prevent a rotation of the dial. The substation ground circuit is normally broken between the ground springs 21 and 22 by the cam arm 4; but when said springs are permitted to engage, ground connection is provided to the ground post 23 and to the release spring 17, as is well known in telephones of this type. For operating the impulse springs 13 and 14 the substation is provided with an impulse wheel 24 secured to the shaft 18 that carries on its periphery the so-called vertical teeth 25 and one rotary impulse tooth 26. The said impulse teeth are so arranged that when the dial is drawn down the impulse springs 14 and 13 are not carried into contact with the ground post 23; but as the dial returns the vertical teeth engage the vertical impulse spring 13, and after they have completed their work the rotary impulse tooth 26 operates the rotary impulse spring 14. In this operation the subscriber's vertical line conductor 27 is first given a number of ground impulses and then the rotary line conductor 28 is given one ground impulse. It will be noticed that as long as the dial is out of normal position the construction is such that the dog 19 permits the pri-

mary circuit springs 29 and 30 to separate, thus preventing the impulses that are delivered to either line conductor from passing to the other. The ringing device of substation A comprises a push button 31 secured to the spring 32. In addition the springs 33 and 34 are so adjusted that when the button 31 is pressed the springs 33 and 34 engage before the springs 32 and 33 disengage. Furthermore, it will be observed that when the button 31 is pressed and the springs 33 and 34 engage, the rotary line conductor 28 is then grounded instead of the vertical line conductor. Furthermore, the selector C and the selector C′ are identical and are of the general type disclosed in the previously mentioned Patent No. 815,321. The only difference between the selector C and the selector disclosed in said patent is that the selector C has two springs in series with the release relay and private wiper. These springs are so controlled by the release magnet that when the latter becomes energized its armature operates to disengage the said springs, thereby disconnecting the release relay from the private wiper. The object of this provision will be explained in connection with the release of the central office switches. In the drawing both selectors are similarly represented. The line wipers 35 and 36 and the private wiper 37, which are carried by the switch-shaft, are shown; also the side switch wipers 38, 39, 40 and 41. In normal position the said wipers engage the contact points 42, 43, 44 and 45; in second position the contacts 46, 47, 48 and 49; and in third position the contact points 50, 51, 52 and 53. The operations of the switch while a call is being made are, of course, controlled by the vertical and rotary line relays 54 and 55, which in turn control the vertical magnet 56, private magnet 57, rotary magnet 58 and release magnet 59. After the side switch passes to third position the release of the selector, as is well known, is controlled through the so-called back-release relay 60. As soon as the switch is operated the switch-shaft permits the off-normal springs 61 and 62 to come into contact, whereby a guarding potential is established by way of the private normal conductor 63 to the private bank contacts of the connectors to prevent another subscriber from interfering with the line establishing connection with the said line by way of the normal line conductors 64 and 65. When the off-normal spring 61 is in normal position, however, it rests in engagement with the spring 66, whereby the bridge-cut-off relay 67 is retained in connection with the private normal conductor 63, so that whenever the line is called the said bridge-cut-off relay 67 is energized, whereby the line relays 54 and 55 are disconnected from the battery and from each other. As shown, the connector D is an improvement upon the connector disclosed in Patent No. 815,176, issued March 13, 1906, to Keith, Erickson & Erickson. The general mechanical details are very much the same, although the circuits are materially different. The usual switch-shaft 68 of said connector is provided with the line wipers 69 and 70 and the private wiper 71 which have allotted to their use the line and private banks 72 and 73. Said shaft is also provided with the cam 74, longitudinal teeth 75, circular teeth 76, normal post arm 77 and coil spring 78. Said connector-switch is also provided with vertical and rotary line relays 79 and 80 and the vertical and rotary magnets 81 and 82 and release magnet 83, private magnet 84, ringer relay 85, and the back-bridge coil 86 which is composed of the windings 87 and 88. The side switch H performs the usual functions through the medium of the side switch wipers 89, 90, 91, 92 and 93. The operation of the system may be more clearly understood if each step during a call is followed up in detail, as in the following: It will be assumed that the subscriber at substation A wishes to call the subscriber at A′, the number of which latter it will be assumed is 120. When the receiver 2 is removed from the switch-hook 3 the cam arm 5, upon leaving the spring 94 which it normally engages, permits the spring 94 to leave the spring 95, thus breaking the ringer circuit, and the same operation permits the primary circuit springs 29 and 30 to come into contact. The first digit being 1 the subscriber operates his dial accordingly, and as soon as the dial is drawn down the ground springs 21 and 22 come into contact, establishing a ground connection from the substation ground G′ to the ground post 23. As the dial returns, the impulse wheel 24 thrusts the vertical impulse spring 13 against the ground post 23 once, and then the rotary impulse tooth 26 in a similar manner carries the rotary impulse spring 14 onto the ground post 23 once. The line conductors 27 and 28 are, therefore, each grounded once, and as a result the vertical line relay 54 of the selector C is first energized by a flow of current from the substation ground G′ through the ground springs 21 and 22, to the vertical impulse spring 13, thence to the vertical line conductor 27, side switch wiper 38, contact point 42, vertical line relay 54, bridge-cut-off relay springs 97 and 96 to the battery lead 98, and through battery B to ground G. The vertical line relay 54, upon energizing, presses the line relay springs 99 and 100 into contact, thus energizing the vertical magnet 56 once by a flow of current from ground G² through the springs 99 and 100, private springs 101 and

102 to the vertical magnet 56, thence to the battery lead 98, and from battery B to ground G. The vertical magnet 56, therefore, operates to raise the shaft wipers 35, 36 and 37 to the first level, in a well-known manner. This operation having been accomplished, then when the rotary line conductor 28 is grounded the rotary line relay 55 is energized, and this in turn operates the private magnet 57, which latter then trips the side switch to second position, establishing an energizing circuit through the rotary magnet 58 for rotating the wipers onto some trunk line. The energizing circuit through the said rotary line relay 55 extends from the substation ground G' to the ground post 23, thence to the rotary impulse spring 14, rotary line conductor 28, side switch wiper 39, contact point 43, rotary line relay 55, bridge-cut-off relay springs 103, 97 and 96 to the battery lead 98, thence through battery B to ground G. The said rotary line relay upon pressing the spring 104 onto the spring 99 closes an energizing circuit through the private magnet 57, as already stated, from ground G^2 through the springs 99 and 104 to the said private magnet 57, thence to the battery lead 98 and through battery B to ground G. The private magnet upon operating permits the side switch to pass to second position, at which time the side switch wiper 40 engages the grounded contact point 48, whereby the energizing circuit for the rotary magnet 58 is closed from ground G^3 to the contact point 48, side switch wiper 40, interrupter springs 105, rotary magnet 58 to the battery lead 98, thence through battery B to ground G. The rotary magnet is then energized, and the wipers 35, 36 and 37 are carried into engagement with the first trunk. If the said trunk is not busy, the armature of the rotary magnet 58, as is well known, by mechanically operating the armature of the private magnet 57, releases the side switch to third position; but if the said trunk is busy the private magnet energizes at the same time that the private armature is depressed and at the instant that the private wiper 37 engages the grounded contact, so that the side switch is held in second position and an energizing circuit is maintained through the rotary magnet 58 until the private wiper 37 is carried onto the terminal of an idle trunk and the energizing circuit for the private magnet destroyed. At the same instant the side switch, of course, passes to third position and the wiper 40 leaves the contact point 48, thus breaking the energizing circuit for the rotary magnet 58 and bringing the selector to a standstill. The passage of the side switch to third position carries the side switch wipers 38 and 39 onto the contact points 50 and 51, and the line conductors 27 and 28 are placed in connection with the line wipers 35 and 36 which, having already entered into connection with the trunk conductors 106 and 107 that lead to the connector D, place the said conductors 27 and 28 in connection with the said connector D. The passage of the side switch to third position, furthermore, establishes a guarding potential at the private wiper 37 when the side switch wiper 41 engages the grounded contact point 53. This guarding potential arrives at the said private wiper 37 from the ground G^4 to the contact point 53, through the wiper 41 back-release relay 60, springs 162 and 163 to the private wiper 37, thus protecting the trunk conductors 106 and 107 from being seized for the time being. The line conductors 27 and 28 having been thus extended to the conductor D the succeeding impulses from the substation A are directed to said connector D. The second digit being 2 the subscriber operates his dial accordingly, grounding the vertical line conductor 27 twice and the rotary line conductor 28 once, as already explained. Each time that the vertical line conductor is grounded the vertical line relay 79 of the connector D is energized by a flow of current from the substation ground G' to the vertical line conductor 27, thence through the selector side switch wiper 38 to the contact point 50, vertical line wiper 35, vertical trunk conductor 106 to the vertical line relay 79, thence through said relay and through the side switch spring 93, contact point 108 to the battery lead 98, and from battery B to ground G. The vertical line relay 79, each time that it attracts its armature, forces the line relay springs 109 and 110 into contact, sending an impulse each time through the vertical magnet 81 from ground G^5 through the said springs 109 and 110, conductor 111 (Fig. 1), private springs 112 and 113, conductor 114, side switch wiper 92, contact point 115 to the vertical magnet 81, thence to batter lead 98, and through battery B to ground G. As disclosed in the aforesaid patent the vertical magnet when energized operates to raise the switch-shaft and wipers. The vertical magnet 81 being energized twice the wipers 69, 70 and 71 are raised to the second level. The ground impulse to the rotary line conductor 28, after the switch-shaft 68 has thus been raised, energizes the rotary line relay 80 of the connector, which in turn operates to energize the private magnet 84. The circuit over which the said rotary line relay 80 is energized extends from the substation ground G' to the rotary line conductor 28, thence to the side switch wiper 39 of the selector C, contact point 51, rotary line wiper 36, rotary trunk conductor 107 to the said rotary line relay 80, thence to battery lead 98, and through battery B to ground G. The rotary line relay 80, upon attracting its

armature, forces the spring 116 onto the spring 109, whereby a flow of battery current is sent through the private magnet 84 from ground G^5, through the springs 109 and 116, conductor 117 to the private magnet 84, thence through conductor 118 to the side switch spring 93, contact point 108 to the battery lead 98, thence through battery B to ground G. The private magnet 84, upon attracting its armature and then deënergizing, operates, of course, to release the side switch H from first to second position. The effect of the shifting of the side switch is to substitute the rotary magnet 82 for the vertical magnet 81, bringing the former under the control of the vertical line relay 79 when the side switch wiper 92 leaves the contact point 115 and engages the contact point 119. The side switch is so constructed that the wiper 93 engages the contact point 108 when the side switch H is in first and second poistions. The contact point 108 is connected with the battery lead 98 and the contact point 120 is connected with the private wiper 37 and, consequently, with ground, when the connector is engaged. With a side switch wiper such as 92 there is a possibility that the wiper might overlap the contact points 108 and 120. Accordingly, to meet this possibility, the wiper 93 is twisted, as shown, and the contact made by the said wiper with the said contact points, instead of being a sliding contact as is the case with the wiper 92, is like the make-and-break contact between the ordinary relay contact springs. The third digit being 0, when the vertical line conductor 27 is grounded ten times corresponding to the digit 0, upon the operation of the dial the vertical line relay 79 then energizes ten times over circuits that are now known. Said relay 79 in turn causes the energization of the rotary magnet 82 step-by-step. The energizing circuit through said rotary magnet extends from ground G^5 through the line relay springs 109 and 110, conductor 111, private springs 112 and 113, conductor 114, side switch wiper 92, contact point 119 to the rotary magnet 82, thence through battery lead 98, and through battery B to ground G. The rotary magnet 82 being energized ten times the shaft 68 is rotated ten steps, in a manner disclosed in said patent, whereby the wipers 69, 70 and 71 are carried into engagement with the tenth terminal of the second level, from which terminal lead the normal conductors 123, 124 and 125 that extend to the selector C′ of the called line, the former two of which conductors continue through to the called substation #120. After the connector has thus been operated the ground impulse to the rotary line conductor 28 energizes the rotary line relay 80 of the connector over circuits that are already well known, which relay in turn operates the private magnet 84 as before. The said private magnet upon energizing, if the line is busy, will close a circuit through the release magnet 83 that will release the switch; but it will be assumed for the present that the line is not busy and that the side switch H passes to third position when the private magnet 84 deenergizes. As soon as the side switch passes to third position a guarding potential is established at the private wiper 71, when the side switch wiper 91 engages the grounded contact point 126. This guarding potential prevents any other subscriber from calling in on the line #120 for the time being. This guarding potential, furthermore, sends a flow of current through the bridge-cut-off relay 127 of the selector C′ for energizing said cut-off relay from the private wiper 71 to the private normal 125, thence through the switch-shaft springs 128 and 129 to the bridge-cut-off relay 127, thence to the battery lead 98, and through battery B to ground G. The said relay 127 upon energizing separates the springs 130, 131 and 132, disconnecting the line relays 133 and 134 from the battery lead 98 and from each other. The side switch wiper 93 upon passing to third position engages the point 120, which changes the polarity of the conductor 135 from battery to ground, thereby completing a circuit which gives battery current to the calling subscriber for talking purposes. This circuit extends from ground G^4 at the selector C, through the side switch wiper 41, back-release relay 60, springs 162 and 163 to the first-selector shaft wiper 37, conductor 136, contact point 120, side switch wiper 93, conductor 135, vertical line relay 79, trunk conductor 106, shaft wiper 35, contact point 50, side switch wiper 38, vertical line conductor 27, springs 30 and 29 to the springs 32 and 33, transmitter 7, primary winding 9 of the induction-coil 8, rotary line conductor 28, side switch wiper 39 and contact point 51, shaft wiper 36, trunk conductor 107, through the rotary line relay 80 to the battery lead 98, thence through battery B and to ground G. This talking battery current in passing through the line relays 79 and 80 energizes said relays. The said relays 79 and 80 upon energizing operate to close in contact the springs 109, 110 and 116, and the springs 137 and 138, and to disengage the springs 138 and 139. When the springs 109 and 110 engage an energizing circuit is closed through the ringer relay 85 extending from ground G^5 through the springs 109 and 110, conductor 111, private magnet springs 112 and 113, conductor 114, side switch wiper 92, contact point 146, conductor 147, through the ringer relay 85 to the battery lead 98, thence through battery B and to ground G. The ringer relay upon energizing shifts the

springs 140 and 141 from in contact with the springs 142 and 143 to engagement with the springs 144 and 145, thereby extending the calling subscriber's line conductors 27 and 28 to the normal conductors 123 and 124, respectively, of the called line. Also, the line relay spring 110 engages the ground spring 109 which, when the side switch was in second position, closed a circuit through the private magnet 84 but which now short-circuits the private magnet, since the side switch wiper 93 has passed to third position and placed ground potential on the other end of the said magnet. Furthermore, the engagement of the trunk-release springs 137 and 138 does not energize the release magnet, since said release magnet has its other terminal connected with the side switch wiper 93, which is in turn connected with the contact 120 and, therefore, with the second trunk-release spring 137, thus short-circuiting the release magnet. The calling subscriber, in order to signal the called subscriber, presses the signal button 31, which results in grounding the rotary line conductor 28 when the springs 33 and 34 engage, and when the springs 32 and 33 disengage the energizing circuit through the vertical relay 79 is broken. The springs of the signaling device are so adjusted that the spring 33 engages the spring 34 before the former disengages from the spring 32. By this means the energizing circuit through the rotary line relay 80 is not interrupted but simply changed to extend from substation ground G' to the springs 34 and 33, transmitter 7, primary winding 9, rotary line conductor 28, side switch wiper 39, shaft wiper 36 to the trunk conductor 107, through the rotary line relay 80 to the battery lead 98, thence to battery B and to ground G. When the springs 33 and 32 disengage the energizing circuit through the vertical line relay 79 is then broken and the relay springs 109 and 110 disengage, thereby breaking the energizing circuit through the ringer relay 85. The said relay upon deënergizing allows the springs 140 and 141 to again engage the generator springs 142 and 143, whereby a signaling current is projected onto the called line. Therefore, each time the signaling button 31 is pressed the ringer relay 85 deënergizes and ringing current is sent out to the subscriber's station from the ringer generator F, through the ringer relay springs 142 and 143 and 140 and 141 to the side switch wipers 90 and 89, line wipers 70 and 69, normal conductors 124 and 123 to the line conductors 148 and 149, and through the ringer 150 and condenser 151. When the subscriber at substation #120 answers, the primary circuit springs 152 and 153 then close into contact, establishing a circuit through the transmitter 154, primary winding 155, in series with the windings 88 and 87 of the coil 86. This circuit provides the called subscriber with battery current for talking purposes and extends from ground G', contact point 53, side switch wiper 41, through the release relay 60 of the first-selector, springs 162 and 163, private wiper 37, conductor 136, contact point 120, side switch wiper 93, through the winding 88 of the coil 86, ringer relay springs 146 and 141, side switch wiper 89, contact point 156, shaft wiper 69, vertical normal conductor 123, line conductor 149, through the springs 153 and 152, signaling device springs to the transmitter 154, primary winding 155 to the rotary line conductor 148, normal conductor 124, shaft wiper 70, contact point 157, side switch wiper 90, springs 140 and 144 to the winding 87 of the relay 86, thence to the battery lead 98, and through battery B to ground G. The calling subscriber having been previously supplied with talking battery current, as explained, now that the called subscriber is also provided with talking battery current, both lines are in readiness for the connected subscribers to converse. The subscribers communicate with each other over the circuits that are marked by the heavy conductors shown in Fig. 2, which talking circuit passes through the condensers 160 and 161 that divide the talking circuit into two sections, which sections provide the connected subscribers with talking battery current. After the subscribers are through talking the calling subscriber may release the switches by restoring the receiver 2 and thus causing the switch-hook 3, through the medium of the arm 5, to disengage the springs 29 and 30. The disengagement of the springs 29 and 30 breaks the circuit through which talking current flows and the relays 79 and 80 deënergize and the springs which said relays control return to normal position. Furthermore, when the springs 138 and 139 engage an energizing circuit is established through the release magnet 83 of the connector and the release relay 60 of the first-selector. This release circuit extends from ground G⁴ at the selector C to the contact point 53, side switch wiper 41, release relay 60, springs 162 and 163, shaft wiper 37, conductor 136, contact point 120, wiper 93, conductor 135, release magnet 83 to the springs 138 and 139 to the battery lead 98, thence through battery B and to ground G. The release magnet 83 upon energizing attracts its armature 166 and remains in readiness to release the connector switch when the energizing circuit is broken through the release magnet, as will be described. The release relay 60 upon energizing attracts its armature and closes the springs 164 and 165 in contact, thereby completing an energizing circuit through the release magnet 59 of the selector C. This circuit extends from the ground G⁷ through the

springs 165 and 164, through the release magnet 59 to the battery lead 98, thence through battery B and to ground G. The release magnet 59 upon energizing attracts its armature, which disengages the springs 162 and 163, thus breaking the energizing circuit through the release relay 60 and the release magnet 83, whereby the armature 166 resumes its normal position and releases the connector. The release relay 60 also deenergizes and the springs 164 and 165 disengage, thus destroying the energizing circuit through the release magnet 59 which now operates in a well-known manner to restore the first-selector C. It will be understood that the release mechanism of the connector, comprising the release magnet 83, release armature 166, release link 140′, double dog 158, is the same as that disclosed in the selector patent cited—that is, when the release armature 166 is attracted the link 140′ latches the double dog 158, and when the release magnet 83 deënergizes, the double dog 158 is then withdrawn from the shaft 68, which latter falls to normal position, and the said double dog at the same time restores the side switch H to normal or first position through the medium of the double dog releasing arm 159, as is well known. When the release magnet 83 and the back-release relay 60 of the selector C energize in series, as described, the release magnet 59 of said selector C attracts its armature, which latter is provided with the springs 162 and 163 which are adapted to separate when the armature of the release magnet is attracted, as explained. It will be evident that when the release magnet 59 energizes it causes a deënergization of the connector release magnet 83 producing the release of said connector, and at the same time the deënergization of the release relay 60. The latter then permits the deenergization of the release magnet 59, which magnet at once drives the selector side switch to first position, permanently destroying the trunk-release circuit by removing the side switch wiper 41 from the grounded contact 53, and there also follows a release of the selector switch-shaft, which breaks the connection between the selector C and connector D. As is well known, busy lines are protected by guarding potentials, and if the called line happens to be busy when the private magnet 84 is energized for the last time, as already explained, the connector switch D will be released at the instant that the private springs 167 and 168 are brought into contact, since the private wiper 71 is then in engagement with the grounded contact. The release circuit extends from the grounded contact to the private wiper 71, thence to the side switch wiper 91, contact point 169, private springs 167 and 168, release magnet 83, conductor 177, side switch wiper 93, contact point 108 to the battery lead 98, thence through battery B and to ground G. The release magnet 83 upon energizing releases the connector switch-shaft and side switch, as is well known, and, of course, the release circuit is broken as soon as the private wiper 71 leaves the grounded contact point. The subscriber at the calling substation then, upon pressing the signaling button, receives a busy signaling current from the busy machine E, over the conductor 171, normal springs 172 and 173, ringer relay springs 174 and 175 to the vertical conductor 176, condenser 160, trunk conductor 106, shaft wiper 35, side switch wiper 38, vertical line conductor 27, springs 30 and 29, through the signaling device, transmitter 7, primary winding 9 of the induction-coil 8, rotary line conductor 28, side switch wiper 39, switch shaft wiper 36, trunk conductor 107, through the rotary line relay 80 to the battery lead 98 and back to the busy signaling machine E. The subscriber will then hang up his receiver, grounding both line conductors 27 and 28 and as a result simultaneously energizing the line relays 79 and 80 of the connector D, thus bringing the springs 137 and 138 into contact. An energizing circuit is established through the release magnet of the connector in series with the release relay of the first-selector C. The energizing circuit extends from ground G^4, as previously traced, to the shaft wiper 37, conductor 136, through the trunk-release springs 137 and 138, through the release magnet 83, side switch wiper 93, contact point 108 to the battery lead 98, thence through battery B and to ground G. The release of the central office switches is then brought about, as previously explained—that is, the selector C is disconnected from the connector D and the latter is fully restored; and if the subscriber continues to retain the release springs 15, 16 and 17 in contact for an extended length of time, then as soon as the selector side switch is drawn into first position by the deënergization of the selector release magnet the line relays 54 and 55 of the selector energize simultaneously over circuit that are known, again energizing the release magnet 59 by pressing the line relay springs 99, 100 and 104 into contact. Of course, the engagement of the line relay springs 100 and 104 energizes the private magnet 57, which latter connects the release magnet 59 with the line relay spring 100, and the engagement of the line relay spring 100 with the ground spring 99 energizes the release magnet 59, as is well known. This energizing circuit through the release magnet is, of course, broken when the subscriber's release springs 15, 16 and 17 separate. From the description of the circuits it will be seen that if the called subscriber hangs up his receiver be-

fore the calling subscriber, the only effect that such an operation will have is to break the current-supply circuit through the windings 88 and 87 of the connector back bridge magnet 86, which produces no effect. It will be understood, of course, that a release of the connector may take place at any time before the side switch passes to third position, over the same circuits and in the same manner that the release takes place when a busy line is called. Such a release may occur after the switch-shaft of the connector is raised and even after the rotation has begun. The connector side switch wiper 93 is provided with the reinforcing spring 121 which strengthens the pressure of said wiper 93 against the contact point 120 when the side switch passes to third position; but when the side switch returns to second and first positions the reinforcing spring 121 is of no service.

From the foregoing it will be seen that I provide a highly efficient automatic telephone system in which the connector switch is very much simplified, there being no differential relays or similar devices to complicate matters, there being two windings only (namely 79 and 80) bridged across the circuit in front of the condensers 160 and 161. Furthermore, the called subscriber takes no part in the release, thus enabling the calling subscriber to again signal the called subscriber without having to make a new call should the latter leave the line before the calling subscriber is through talking to him. Again, I simplify the connector by doing away with automatic ringing devices and providing the calling subscriber with signaling means controlled directly by him. I further provide a side switch with the pole changing wiper 93 of a design that will prevent the positive and negative terminals of battery B from being short-circuited if by accident the side switch were to delay in a half-way position between the second and third positions of the side switch. It is found that for the connector D the coils may be varied considerably, but good results are obtained with the following resistances: The line relays 79 and 80 of three hundred and fifty ohms each; the windings 87 and 88 of three hundred and fifty ohms each; and the release magnet 83 of sixty ohms. In the selector the release relay can be of one-half ohm resistance, so that it will not energize in series with the relay 79 or the coil 88, but will energize in series with the magnet 83. Modifications and changes can, of course, be made without departing from the spirit of my invention.

What I claim as my invention is:—

1. In a telephone exchange system, a talking circuit, a battery for supplying talking current to said circuit, a connector provided with a side switch, a trunk conductor extending from said connector, and means operated by the side switch for bridging the battery across the said circuit, said trunk conductor excluded from said circuit but included in said bridge.

2. In a telephone exchange system, a talking circuit, an automatic switch provided with a side switch, a battery, a trunk conductor extending from said automatic switch, and means operated by the side switch for bridging the battery across the said circuit, said trunk conductor excluded from said circuit but included in said bridge.

3. In a telephone exchange system, a talking circuit, a battery, a connector provided with a so-called private magnet, a trunk conductor extending from said connector, and means controlled by said magnet for bridging the battery across said circuit, said trunk conductor excluded from said circuit but included in said bridge.

4. An automatic telephone exchange system comprising a connector provided with a side switch, a release magnet, and a two-switch-point release magnet energizing circuit, trunk-release springs providing the normally open switch point for said circuit, means for operating said springs, and a side switch wiper and a contact providing the normally closed switch point.

5. An automatic telephone exchange system comprising a connector provided with a side switch, a release magnet, line relays, means by which the release magnet, when the side switch is in first or second position, can be energized by the energizing of the line relays only, and means for supplying talking current through the windings of said line relays.

6. An automatic telephone exchange system comprising a connector provided with a side switch, a release magnet, means for short-circuiting or shunting the release magnet when the side switch moves to third position, a line relay, and means for energizing said release magnet by the deënergizing of said relay.

7. An automatic telephone exchange system comprising a connector provided with a release magnet, a side switch, a two-switch-point energizing circuit for said magnet, springs providing the normally open switch point of said circuit, means for operating said springs, and a side switch wiper and a contact providing the normally closed switch point.

8. An automatic telephone exchange system comprising a calling line, a signaling or ringing device, means by which the operation of said device first grounds both sides of the calling line and then opens one side thereof, leaving only the other side grounded, called lines divided into groups, means including an automatic switch having one motion to select a group and a sec-

ond motion to connect with a line in a selected group for extending connection to a called line, a grounded source of current, and means operated by current from said source responsive to said device for applying signaling current to the selected called line, as set forth.

9. In a telephone exchange system, a common battery connector having vertical and rotary switching motions and signaling and releasing and current-feeding operations, a pair of line relays having complete and direct control of all of said operations, and means for switching a battery in series with and between said relays, as set forth.

10. An automatic trunking switch provided with a trunk-release circuit, a release relay in said circuit, a release magnet controlling said circuit, a release magnet energizing circuit controlled by said relay, and means for supplying talking current over a portion of said trunk-release circuit.

11. In an automatic telephone exchange system, a selector provided with a trunk-release circuit, a release relay in said circuit, a release magnet provided with normally closed contacts controlling said circuit, a release magnet energizing circuit, said relay provided with normally open contacts controlling said energizing circuit, and means for supplying talking current over a portion of said trunk-release circuit.

12. In an automatic telephone exchange system, the combination of automatic switches, a talking circuit, a trunk-release circuit between switches, and means for supplying electric current over a portion of said trunk-release circuit to the talking circuit.

13. A telephone exchange system provided with subscribers' lines and release trunks, and means for supplying battery current over the release trunks to the lines for talking purposes.

14. In a telephone exchange system, the combination of a release trunk, a release circuit, a telephone, a telephone circuit, and a source of current, said circuits including said release trunk and source of current.

15. In a telephone exchange system provided with subscribers' lines and selectors and connectors, whereby talking circuits are established between calling and called subscribers, means for supplying battery current through selectors and connectors by devices therein not included in the talking circuits, and then over said circuits to calling lines and also to called lines.

16. In an automatic telephone exchange system provided with subscribers' lines and automatic connectors, means under the control of the calling subscribers for supplying talking current through the connectors to the calling lines, and release trunks over which the talking current is supplied.

17. In a telephone exchange system, a subscriber's telephone, a selector provided with a private wiper, a source of talking current, and a circuit including said telephone and private wiper and source of current in series.

18. An automatic telephone system comprising a connector provided with a release magnet, a side switch, a couple of energizing circuits for the said release magnet, each circuit comprising a first and second switch point, each of said energizing circuits having one of the switch points thereof open and the other closed while the magnet is de-energized, the open switch point of the first of the said energizing circuits being provided by a pair of springs, and the open switch point of the second of said energizing circuits being provided by a second pair of springs, and means for operating said springs, the closed switch points for the said circuits being provided by the springs of the side switch, as set forth.

19. In a telephone system, a trunk line, a trunk-selecting switch for selecting said trunk, a single-wound release relay therefor controlled over said trunk, and means for supplying current through the winding of said relay to the talking circuit for talking purposes.

20. In a telephone system, a trunk-line consisting of a pair of talking conductors and a third conductor associated therewith, and means for supplying current over the third conductor to one of the talking conductors for talking purposes.

21. In a telephone system, a trunk-line consisting of a pair of talking conductors and a third conductor associated therewith, and means including said third conductor for bridging a common battery between the talking conductors of the trunk-line.

22. In a telephone system, a battery, a telephone line, a connector common to the system, an individual trunking switch for said telephone line, and means including portions of said individual switch constituting a battery bridge across the talking circuit at the connector.

23. In a telephone system, a connector having one motion to select groups and another motion to find the called line in any selected group, means including an automatic trunk selector for extending a trunk connection to said connector, a trunk-release circuit for said selector controlled at the connector, and means controlled at the connector for supplying current for talking purposes over a path including a portion of the trunk-release circuit.

24. In a telephone system, subscribers' lines, means including a final connector switch controlled over a calling line for extending a connection to a called line, a central source of current, a progressively movable side switch in said connector, and circuit connections controlled solely by said

side switch whereby in its final position the said current source is connected to supply talking current to the calling line.

25. In a telephone system, subscribers' lines, means including a final connector switch controllable over a calling line for extending a connection to a called line, a central source of talking current connected in bridge of the calling line upon the completion of the connection and before the called subscriber answers, and a progressively movable side switch in said connector for closing said bridge.

26. In a telephone system, subscribers' lines, means including a selector switch and a connector switch controllable over a calling line for extending a connection to a called line, release magnets in said switches, a release relay in said selector controlling the circuit of its release magnet, an energizing circuit including the said relay and the release magnet of the connector in series under the sole control of the calling subscriber, and means including a relay deënergized responsive to the opening of the calling line for closing said circuit.

27. In a telephone system, an established connection between a calling and a called line including an automatic connector switch, a relay in said connector energized over the two sides of the calling line in series during conversation, a release magnet in said connector, a circuit for said magnet open at a single point under control of said relay, and means at the calling substation for opening the line at the termination of conversation whereby said relay is deënergized to close the circuit of said release magnet.

28. In a telephone system, subscribers' lines, means including a connector switch controllable by separately grounding the two sides of a calling line at the substation for extending connection to a called line, means for supplying current to the talking bridges at the calling and called substations, and releasing means in said connector under the sole control of the calling subscriber and operative responsive to the opening of the talking bridge at the calling substation to release the connection.

29. In a telephone system, means for connecting a calling and a called line including an automatic connector switch, a relay in said connector energized upon the completion of the connection to close the talking conductors, a second relay energized over the two sides of the calling line in series, a source of signaling current, means at the calling substation for deënergizing said second relay, and circuit connections whereby upon the deënergization of said second relay the said first relay is deënergized to connect said source with the called line.

Signed by me at Chicago, Cook county, Illinois, this 1st day of November, 1906.

EDWARD D. FALES.

Witnesses:

ARTHUR B. SPERRY,

HARRIETT M. MERRIAM.