T. G. MARTIN.

TELEPHONE EXCHANGE SUPERVISORY SYSTEM.

APPLICATION FILED JAN. 3, 1910. RENEWED JULY 20, 1916.

1,217,477. Patented Feb. 27, 1917.

4 SHEETS—SHEET 1.

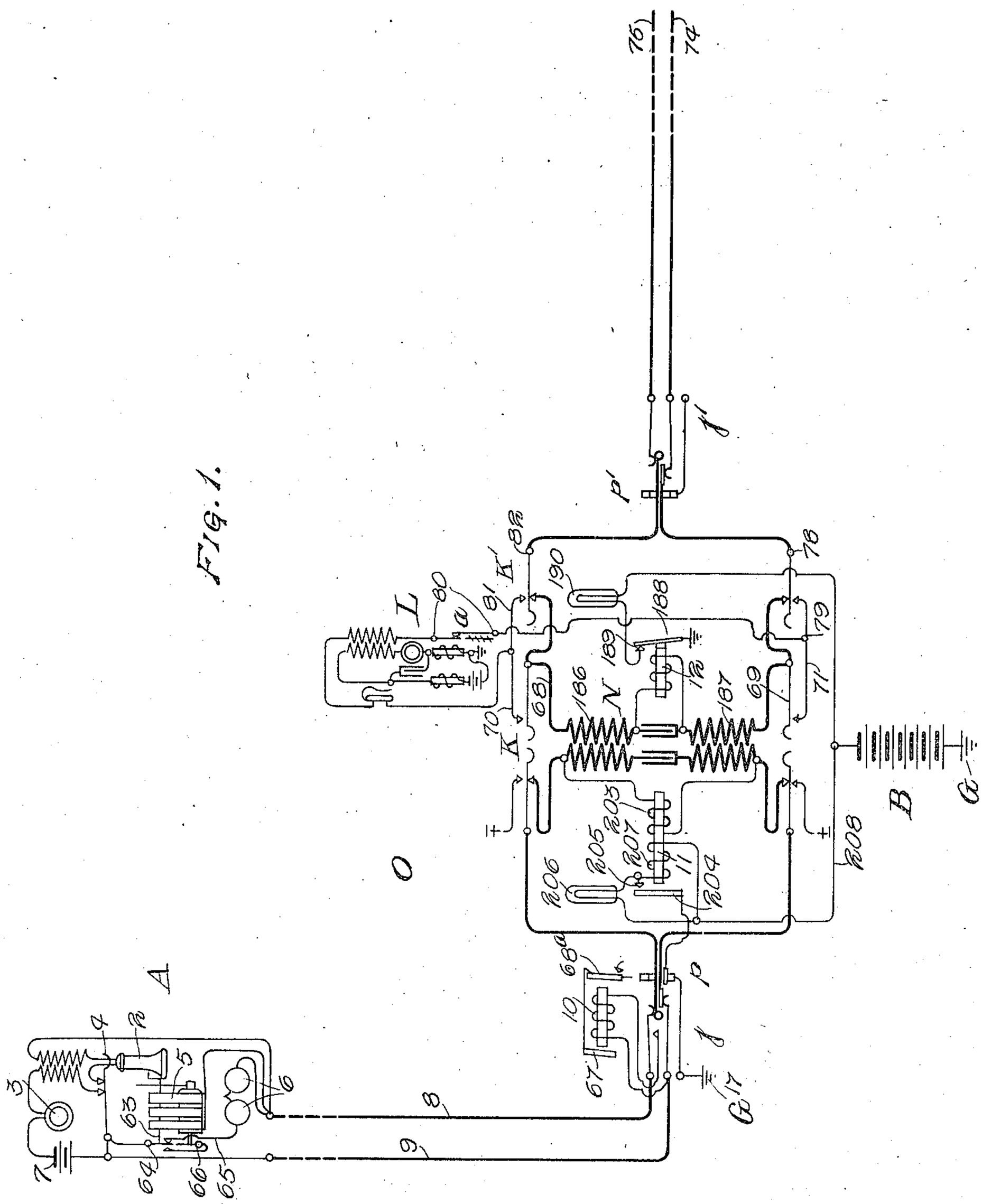

Witnesses.
R. H. Burfeind.
A. Anderson.

Inventor:
Talbot G. Martin,
By Bulley & Brand & Drury.
Attorneys.

T. G. MARTIN.

TELEPHONE EXCHANGE SUPERVISORY SYSTEM.

APPLICATION FILED JAN. 3, 1910. RENEWED JULY 20, 1916.

1,217,477. Patented Feb. 27, 1917.

4 SHEETS—SHEET 2.

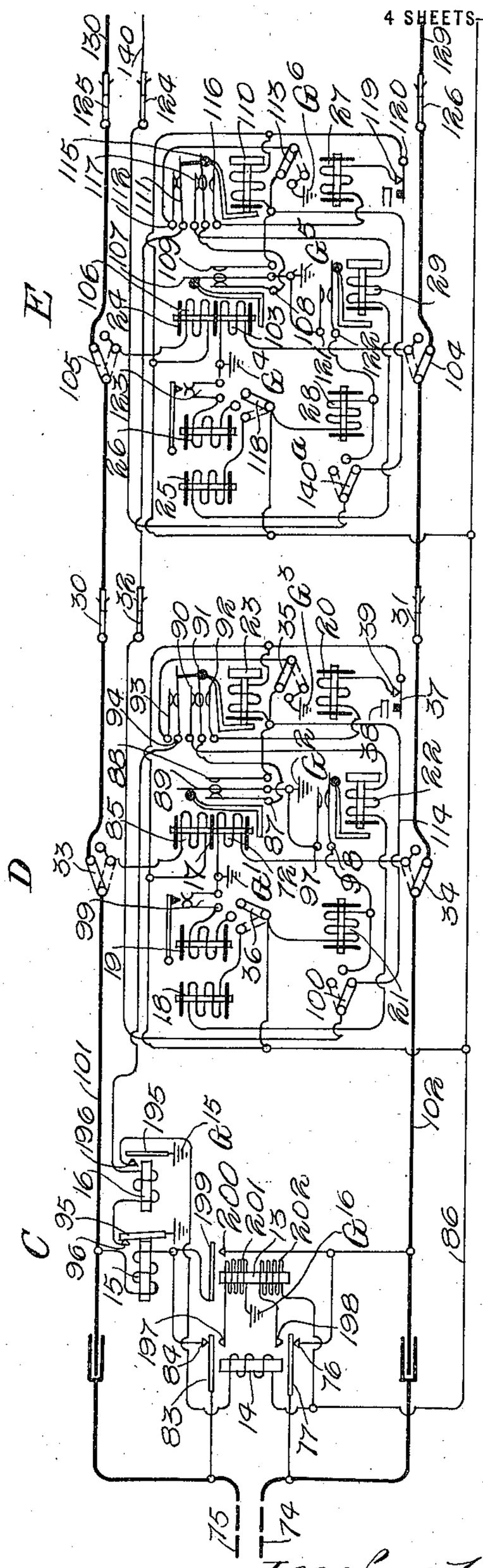

FIG. 2.

Witnesses.
P. H. Burfeind
A. Anderson.

Inventor:
Talbot G. Martin,
By Bulkley, Grau & Drury.
Attorneys.

T. G. MARTIN.

TELEPHONE EXCHANGE SUPERVISORY SYSTEM.

APPLICATION FILED JAN. 3, 1910. RENEWED JULY 20, 1916.

1,217,477. Patented Feb. 27, 1917.

4 SHEETS—SHEET 3.

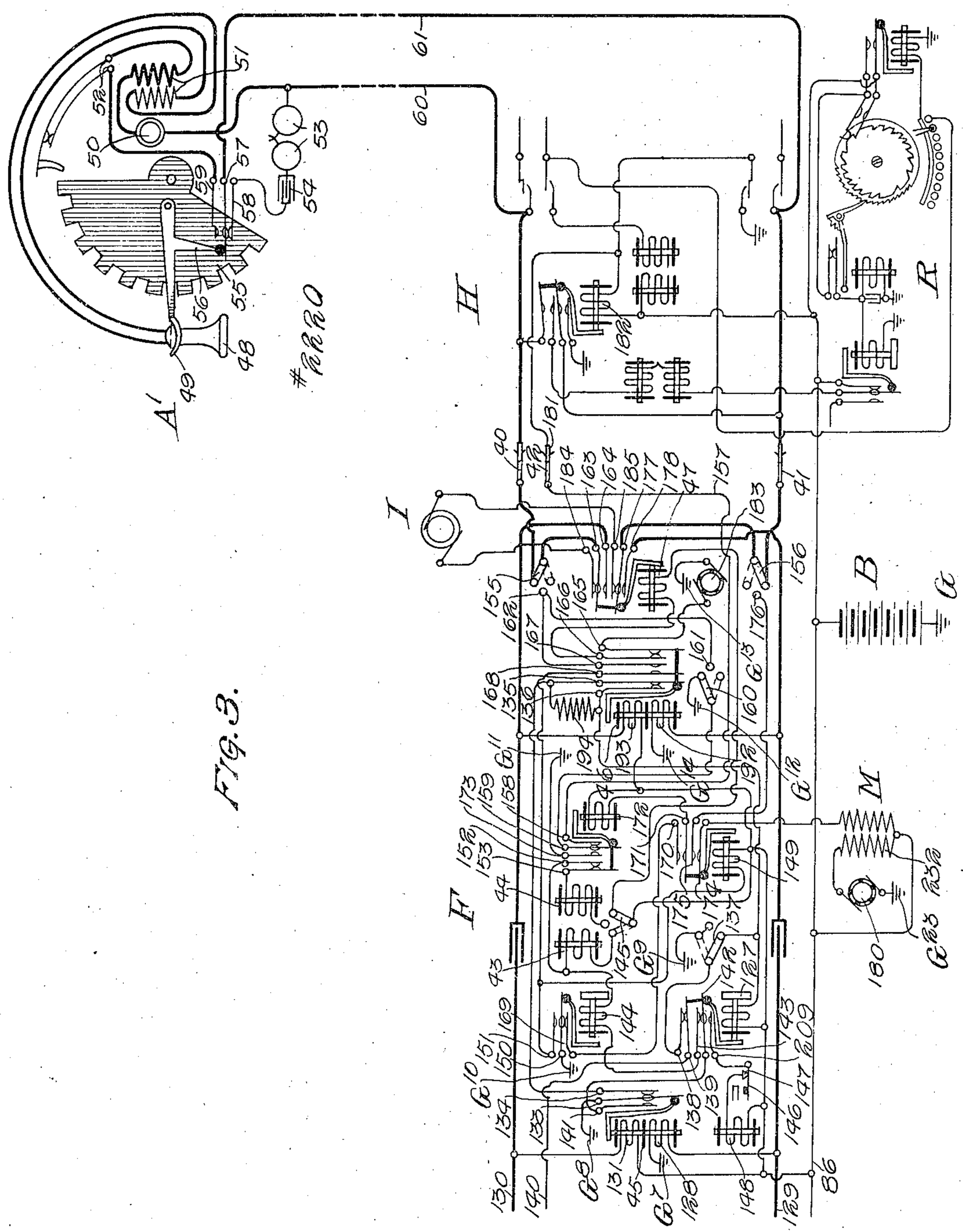

FIG. 3.

Witnesses.
R. H. Bumpfeind
A. Anderson.

Inventor:
Talbot G. Martin,
By Bulley, Duraud & Drury.
Attorneys.

T. G. MARTIN.

TELEPHONE EXCHANGE SUPERVISORY SYSTEM.

APPLICATION FILED JAN. 3, 1910. RENEWED JULY 20, 1916.

1,217,477. Patented Feb. 27, 1917.

4 SHEETS—SHEET 4.

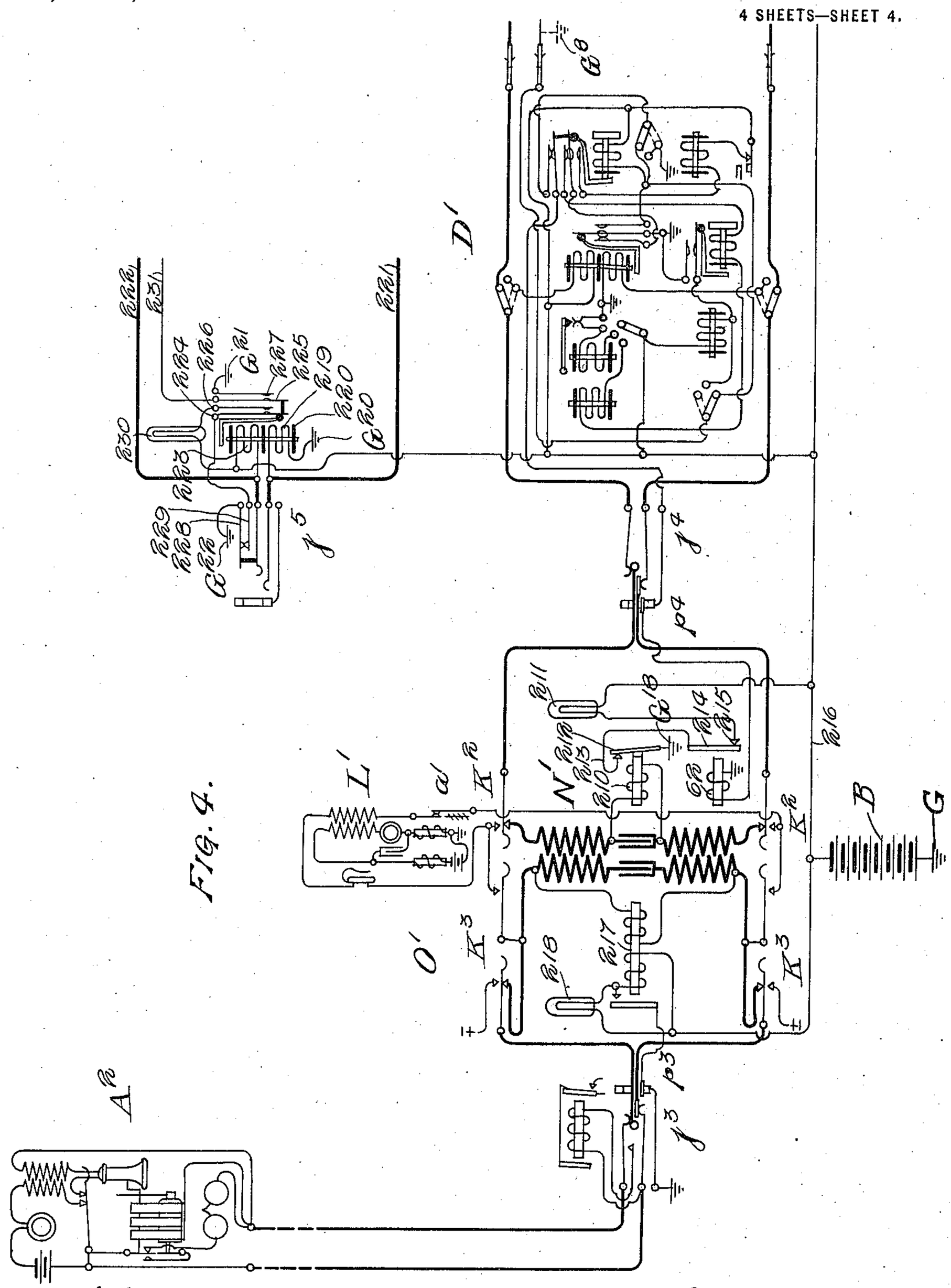

Witnesses.
P. H. Bursfeind
A. Andersen.

Inventor:
Talbot G. Martin,
By Bulkley Brand & Drury.
Attorneys.

UNITED STATES PATENT OFFICE.

TALBOT G. MARTIN, OF CHICAGO, ILLINOIS, ASSIGNOR TO AUTOMATIC ELECTRIC COMPANY, OF CHICAGO, ILLINOIS, A CORPORATION OF ILLINOIS.

TELEPHONE-EXCHANGE SUPERVISORY SYSTEM.

1,217,477. Specification of Letters Patent. Patented Feb. 27, 1917.

Application filed January 3, 1910, Serial No. 536,131. Renewed July 20, 1916. Serial No. 110,414.

To all whom it may concern:

Be it known that I, TALBOT G. MARTIN, a citizen of the United States of America, and resident of Chicago, Cook county, Illinois, have invented a certain new and useful Improvement in Telephone-Exchange Supervisory Systems, of which the following is a specification.

My invention relates to telephone exchange systems in general, but more particularly to semi-automatic systems of that particular character in which the calling connection passes through an operator's cord circuit before reaching the automatic switches, and in which means are provided at the said cord circuit for supervising the connection thus established between the two subscribers' lines, whereby the operator at such cord circuit may know when the subscribers are through talking and have hung up their receivers.

Objects of my invention are, therefore, to provide an improved arrangement for controlling the supervisory apparatus of the cord circuit over the two sides of the trunk leading therefrom, whereby the supervision is over a metallic circuit when the call is from one exchange to another; to provide an arrangement whereby the supervision is over a third conductor when the call is local, the cord circuit for local calls having a relay which is energized over such third conductor of the trunk leading to the automatic switches; to provide an arrangement whereby, when the call is from one exchange to another, the supervisory control for such connection is in part over a third conductor at the called exchange, and partly over the two sides of the trunk leading from one exchange to the other; to provide an arrangement whereby the introduction of sufficient resistance into one circuit, when the called subscriber answers, serves to increase the flow of current in another circuit including a relay, and to thereby energize such relay, thus effecting the retirement of the supervisory signal at the cord circuit to indicate to the operator that the called subscriber has answered; and to provide certain details and combinations and features of improvement whereby these and other objects are all accomplished in a two-wire system.

By a "two-wire system" I mean that well-known type of automatic or semi-automatic telephone exchange system in which no operating grounds are employed at the subscribers' stations, and in which the automatic switches are, therefore, necessarily controlled over metallic circuits—that is to say, circuits which include the two sides of a calling line in series.

To the foregoing and other useful ends my invention consists in matters hereinafter set forth and claimed.

In the accompanying drawings Figures 1, 2 and 3 taken together, and in the order named, represent a complete circuit connection between a manual substation A (Fig. 1) and an automatic substation A′ (Fig. 3) of a distant exchange in a system embodying the principles of my invention.

In Fig. 1 there is shown diagrammatically a manual substation the line conductors of which are connected to a jack *j* at the central office. At O is shown an operator's cord circuit adapted to extend connection from a subscriber's line jack *j* to a trunk jack *j′*, to which latter is connected a trunk leading to a distant automatic exchange.

In Fig. 2 is shown diagrammatically a part of the central office equipment of an automatic exchange with which I have elected to illustrate my invention. At C is shown the automatic exchange terminal of a trunk leading from the manual exchange of Fig. 1. At D is shown a first selector switch, and at E a second selector is represented.

In Fig. 3 is shown a connector switch F. At A′ is shown an automatic substation to the line conductors of which is allotted a line switch H. At R is shown a master switch for controlling a group of line switches of which the line switch H is a member. A central office ringer generator is shown at I and at M is represented a busy signaling machine.

In Fig. 4 is shown a manual substation A^2 belonging to the same exchange as substation A (Fig. 1). At O′ is shown an operator's cord circuit for extending a connection from a manual substation to automatic switching apparatus in the same exchange. At D′ is shown a first selector and at j^5 is represented a jack for receiving calls from an automatic substation for a manual substation. In the drawings several batteries B are shown with one terminal (preferably the positive) grounded. There may,

however, be but one battery, or one in each exchange.

The manual substations A and A^2 are similar and may be of any suitable or approved type. As here shown, these substations are local battery substations and (referring to substation A) comprise the usual receiver 2, transmitter 3, switch hook 4, magneto generator 5, ringer 6 and local battery 7. Across the line conductors 8 and 9 of substation A there is normally bridged a signaling drop 10 at the exchange. This drop is adapted to be actuated by current from the magneto 5 to signal the operator when a connection is desired. The cord circuit O is an improvement upon the usual cord circuit, since means are provided for giving supervision over a call to an automatic exchange. As here shown, the cord circuit O comprises the usual supervisory relays 11 and 12, each with its accompanying lamp, and a ringing and listening key K. In addition there is provided a key K′ for connecting the operator's calling device with the calling plug *p′*. Since the substations here shown are of the local battery type, while the automatic exchange is common battery, the cord circuit is also provided with a repeating coil N. The operator's telephone set L is similar to the ordinary operator's set, with the addition of a calling device *a* for controlling the operation of the automatic switching apparatus.

The automatic exchange terminal C of the trunk from the manual exchange is provided with the relays 13, 14, 15 and 16 for the purpose of furnishing means whereby the operator may supervise the call over said trunk.

The first selector D is of the general type disclosed in United States Letters Patent No. 815,321, granted March 13, 1906, to Keith, Erickson and Erickson, the circuits being modified somewhat in order to adapt the switch to operate in conjunction with a twi-wire system—that is, a system in which no ground connection is employed at the substation. As here shown, the selector D comprises, among other details, the wipers 30, 31 and 32 carried upon a shaft (not shown), the said shaft having a vertical motion controlled by the vertical magnet 18 and a rotary motion controlled by the rotary magnet 19. The selector D is controlled by the operator through the medium of the double-wound line relay 17. The side switch, composed of the wipers 33, 34, 35, 36 and 100, is well known and is controlled by the private magnet 21, which latter is in turn controlled by the private relay 22. The off-normal spring 37 is normally held out of engagement with contact point 39 by the arm 38 which is attached to the switch shaft. As soon, however, as the shaft is raised one step the arm 38 permits the spring 37 to engage the contact point 39, thereby supplying battery current to the released magnet 20. The selector D is provided with the so-called connector release—that is, the shaft and side switch are restored immediately upon the energization of the release magnet 20 instead of by the deënergization of the release magnet, as shown in said selector patent. The switch D is also provided with a bank of contacts which are in position to be engaged by the wipers 30, 31 and 32, and to which are connected trunks leading to second selectors E. The said second selectors E are similar to the first selector D.

The connector F (Fig. 3) is of the general type disclosed in United States Letters Patent No. 815,176, granted March 13, 1906, to Keith, Erickson and Erickson, and, like the selectors D and E, is adapted to operate in conjunction with a two-wire system. Like the selectors the connector F is provided with a shaft (not shown) carrying the wipers 40, 41 and 42 and having a vertical and rotary motion controlled by the vertical and rotary magnets 43 and 44. The operation of the connector is controlled through the medium of the double-wound line relay 45. A double-wound back-bridge relay 46 is provided through which the called substation is furnished with talking battery current. A ringer relay 47 is provided for the purpose of connecting the ringer generator I with the line of the called substation after the connection therewith has been completed.

The line switch H and master switch R may be of the general type disclosed in English Patent No. 26,301 of 1906, and in the *Western Electrician* of Chicago, Illinois, of January 21, 1908, being adapted to operate, however, in conjunction with a two-wire system. Since these switches are used only when the substation A′ makes a call, I do not deem it necessary to further describe them.

The automatic substation A′ may be of any suitable or approved type. As here shown, it comprises the usual receiver 48, switch-hook 49, transmitter 50, induction coil 51, impulse springs 52, ringer 53 condenser 54 and impulse wheel 55. By means of the cam arm 56 the switch hook 49 controls the ringing and talking circuits. When the receiver is on the hook the arm 56 holds the spring 57 in engagement with the spring 58, whereby the ringer 53, in series with the condenser 54 is bridged across the line conductors 60 and 61. When the receiver is removed from the hook it rises and permits the spring 57 to engage the spring 59, whereby the transmitter 50, in series with the primary winding of the induction coil 51, is bridged across the line in place of the ringer 53.

The cord circuit O′ (Fig. 4) is similar to

the cord circuit O (Fig. 1), except for the addition of the relay 62 which is connected to the third conductor of the plug p^4.

A clearer understanding of my invention may be had from an explanation of its operation when employed in establishing a connection between two substations. It will first be assumed that the manual substation A desires connection with the substation A′ of Fig. 3, the number of which will be assumed to be 2220. The subscriber at substation A first turns the crank of the generator 5, whereby the drop 10 at the central office is operated to signal the operator. The manner in which said drop is operated is as follows: As soon as the crank is turned the shaft 63 forces the spring 64 out of engagement with the spring 65 and into engagement with the spring 66, whereby the circuit of the ringer 6 is opened and the armature of the generator 5 is bridged across the line conductors 8 and 9. Further rotation of the crank causes a rotation of the generator armature, generating a current which flows over the conductors 8 and 9 and through the drop 10. The winding of the drop 10 being thus energized, the armature 67 is attracted and releases the shutter 68^a, which falls down and indicates to the operator that the subscriber at substation A desires to make a call. Upon receiving the signal of the drop 10 the operator inserts the plug p into the jack j and throws the key K to close the springs 68 and 69 into engagement with the springs 70 and 71, respectively, whereby the talking set L is bridged across the cord O. The operator may then communicate with the calling subscriber, who removes his receiver immediately after operating the generator to signal the operator. Upon learning that the substation #2220 is desired the operator restores the key K, inserts the plug p' into the jack j', throws the key K′ and proceeds to call the desired substation in the usual manner. The operation of the key K′, when thrown over, is to disconnect the repeating coil N from the trunk, and bridge across it instead the secondary circuit of the operator's set L including the calling device a. As soon as the plug p' is thus inserted into the jack j' and the key K′ operated, the line relay 17 of the selector D is energized over a circuit extending from ground G′ at the selector through the winding 72 of the relay 17, side switch wiper 34 (in first position), conductor 102, contact point 76, armature 77 of the relay 14 to the trunk conductor 74, thence through the sleeve conductors of the jack j' and plug p', springs 78 and 79 of the key K′, thence through the impulse springs 80, secondary of induction coil and receiver of the operator's set L, and through the springs 81 and 82 of the key K′ and tip conductors of the plug p' and the jack j' to the trunk conductor 75, thence through the armature 83 and contact 84 of the relay 14, relay 15, conductor 101, side switch wiper 33 and winding 85 of the relay 17 to the battery lead 86, thence through battery B to ground G. The relay 17, upon energizing, shifts the spring 89 out of engagement with the spring 87 and into engagement with the spring 88, whereupon an energizing circuit is closed from ground G^2 through the springs 89 and 88 and release relay 23 to the battery lead 86, thence through battery B to ground G. The relay 23, upon energizing, shifts the spring 91 out of engagement with the spring 92 and into engagement with the spring 90, and forces the spring 94 into engagement with the spring 93. The shifting of the spring 91 extends a connection from the impulse spring 87 to the vertical magnet 18 preparatory to the reception of impulses. The engagement of the springs 94 and 93 completes a connection from ground G^3 through the side switch wiper 35 and said springs 93 and 94 to the relay 16. This simply short-circuits the relay 16, since it already has ground connected to the other end of its winding by the engagement of armature 95 with contact point 96 upon the energization of relay 15 which is included in the energizing circuit of the line relay 17. The apparatus is now in position to receive impulses for the first digit of the desired number, and the operator now operates her calling device in the usual manner for that digit. As the impulse wheel of the operator's calling device returns to normal position after having been pulled down, the impulse springs 80 are separated twice, thereby twice opening the energizing circuit of the line relay 17 of the selector D and the relay 15. The relays 15 and 17 thus momentarily deënergize twice, the relay 15 having no effect at this time, however, other than to twice open the short-circuit of the relay 16. Each time the relay 17 deënergizes, however, the spring 89 disengages spring 88 and comes into contact with spring 87. The separation of springs 89 and 88 momentarily opens the circuit of the release relay 23, but this relay is a slow-acting relay, that is, slow to deënergize, and the time of separation of springs 89 and 88 is so short that the said relay does not have time to fall back. Thus the only effect of the operation of the relay 17 is to send two impulses through the vertical magnet 18 by the engagement of springs 89 and 87. The vertical magnet 18 thus receives two impulses over a circuit extending from ground G^2 through springs 89 and 87, 91 and 90, private magnet relay 22, vertical magnet 18 and side switch wiper 36 to battery lead 86, and thence through the battery B to ground G. The vertical magnet 18 responds to these two impulses and raises the shaft two steps to carry the shaft wipers

to a position opposite the second bank level, in which are situated the terminals of the trunk leading to the second selector E. The private magnet relay 22 (which was included in the circuit through the vertical magnet) is energized by the first impulse, but being a slow-acting relay (like the relay 23) does not have time to deënergize between impulses. After all of the impulses for the digit are completed the relay 17 remains in its energized position, thus opening the circuit through the relay 22 and magnet 18, whereupon the relay 22 allows its armature to fall back after a short time. When the private magnet relay 22 energizes, it closes an energizing circuit for the private magnet 21. This circuit extends from ground G^2 through springs 97 and 98 and private magnet 21 to battery lead 86, thence through battery B to ground G. This energizing circuit is maintained as long as impulses are being sent to the vertical magnet 18. After the last impulse has been delivered to the vertical magnet, the relay 22 deënergizes, as before explained, and opens the energizing circuit of the private magnet 21, which in turn deënergizes and permits the side switch to pass to second position. When the side switch wiper 36 engages its second-position contact point it completes an energizing circuit through the rotary magnet 19. This energizing circuit extends from ground G′ through the interrupter springs 99, rotary magnet 19 and side switch wiper 36 to the battery lead 86, and thence through battery B to ground G. The rotary magnet attracts its armature, which rotates the shaft wipers onto the first set of bank contacts of the second level, to which they were previously raised by the magnet 18, presses down the armature of the private magnet 21, and also opens the circuit of its own magnet at the interrupter springs 99. When the circuit of the rotary magnet is thus opened its armature falls back, and if the first trunk is idle the armature of the private magnet also falls back and allows the side switch to pass to third position. If, however, the first trunk engaged by the wipers 30, 31 and 32 is busy on account of having been seized by some other first selector whose bank is multipled with that of the selector D, the private wiper 32 will find the first contact it engages connected to ground through the first occupying switch. In this case, as soon as the shaft wipers are rotated one step, an energizing circuit is completed extending from the grounded contact engaged by the private wiper 32 through the said wiper 32 and side switch wiper 100 (which is still in second position) to and through the private magnet 21, thence to the battery lead 86 and through battery B to ground G. The private magnet, being thus energized, does not allow its armature to fall back when the rotary magnet deënergizes, but locks the side switch in second position. The rotary magnet will then be energized a second time upon the closure of the interrupter springs 99 and will rotate the shaft wipers a second step. The rotary magnet will continue to rotate the shaft and its wipers step by step until the private wiper 32 finds a non-grounded contact of an idle line, whereupon the private magnet will deënergize and allow the side switch to pass from second to third position. As soon as the side switch wiper 36 leaves its second position the circuit of the rotary magnet 19 is permanently opened. When the side switch wipers 33 and 34 pass from second to third position the line relay 17 is cut off from the trunk conductors 101 and 102 and allowed to deënergize, but at the same time an energizing circuit is closed through the line relay 24 of the second selector E. This circuit extends from ground G^4 through the winding 103, side switch wiper 104, line wiper 31 of the first selector D, side switch wiper 34 to the trunk conductor 102, thence through the operator's talking set and back to the trunk conductor 101, as traced for the relay 17, and thence through the side switch wiper 33, line wiper 30 and side switch wiper 105 to and through the winding 106 of the relay 24 to battery lead 86, and thence through the battery B to ground G. The relay 24, upon energizing, shifts spring 107 out of engagement with spring 108 and into engagement with spring 109, which closes an energizing circuit through the release relay 110 in the same manner in which the relay 17 closed the energizing circuit of the relay 23. The energizing circuit for relay 110 extends from ground G^5 through springs 107 and 109 and relay 110 to battery lead 86, thence through the battery B to ground G. The closure of contact between springs 111 and 112 by the energization of relay 110 maintains an energizing circuit through the relay 23 of selector D, which relay would otherwise be deënergized by the deënergization of relay 17 when the side switch of the first selector passed to third position. This new circuit through relay 23 extends from ground G^6 through side switch wiper 113, relay springs 112 and 111, private wiper 32, side switch wiper 100 (in third position) to conductor 114. From conductor 114 one branch of this circuit extends through relay 23 to battery B, while another branch extends through side switch wiper 35 to the relay 16, still maintaining that relay shirt-circuited. The closure of springs 111 and 112 of the relay 110 also establishes a guarding potential from ground G^6 to the contact upon which the wiper 32 is resting, as previously traced, and thence to the corresponding contact of all the selector banks that are multipled with that of selector D. This guarding po-

tential prevents any other first selector from establishing connection with the second selector E while it is in use. The energization of release relay 110 of the second selector E also shifts spring 115 out of engagement with spring 116 and into engagement with spring 117, whereby the vertical magnet 25 is placed in connection with the impulse spring 108 and the selector E is then in position to receive impulses for the second digit.

When the operator operates the calling device *a* for the second digit (2) the line circuit is opened twice and the line relay 24 of the second selector E deënergizes twice in the same manner as did the relay 17 of the first selector D when the calling device was operated for the first digit. Each time the relay 24 deënergizes, it opens the circuit of the release relay 110 and closes an energizing circuit through the private magnet relay 29 and vertical magnet 25 in series. The relay 110, being slow-acting, does not deenergize while the impulses are being sent in, but the vertical magnet 25 responds to the two impulses sent to it and operates to raise the shaft wipers two steps. The circuit over which the vertical magnet is energized extends from ground G^5 through springs 107 and 108, 115 and 117, private magnet relay 29, magnet 25 and side switch wiper 118 to battery lead 86, and thence through battery B to ground G. As soon as the shaft is raised the first step, the off-normal spring 120 engages the contact point 119, whereby the release magnet 27 is connected with the battery B. The slow-acting private magnet relay 29 is energized by the first impulse to the vertical magnet 25 and remains in its operated position until after the last impulse. As soon as the relay 29 energizes, it closes an energizing circuit through the private magnet 28. This circuit extends from ground G^5 through springs 121 and 122, and through private magnet 28 to battery lead 86, thence through the battery B to ground G. This energizing circuit is broken when the relay 29 deenergizes after the last impulse, and the side switch is released to second position, as was explained for the first selector D. When the side switch wiper 118 leaves its first position, it disconnects the vertical magnet 25 from the battery B, so that the said magnet cannot be further operated, and in second position it closes an energizing circuit through the rotary magnet 26. This circuit extends from ground G^4 through interrupter springs 123, rotary magnet 26 and side switch wiper 118 to battery lead 86, thence through the battery B to ground G. The rotary magnet then energizes once, rotates the shaft wipers onto the first contact of the second level and, if these first contacts are idle, causes the side switch to be tripped to third position. If, however, the first trunk is busy, the private magnet is energized by the private wiper 124 coming in contact with the guarded private back contact, and the side switch is locked in second position in the same manner as was explained in connection with first selector D. The rotary magnet then continues to operate to advance the shaft wipers 124, 125 and 126 step by step until the terminal of an idle trunk is reached, when the private magnet 28 is deënergized and the side switch passes to third position, thus extending the connection to a connector switch F (Fig. 3). The movement of side switch wiper 118 from second to third position opens the energizing circuit of the rotary magnet 26.. As soon as the connection is extended to the connector F the line relay 45 energizes and closes an energizing circuit for the release relay 127, which in turn energizes and supplies a new holding ground for the relays 110 and 23 of the switches E and D, as the ground G^5 is cut off by the deënergization of relay 24 when the side switch of the second selector passes from second position. The energizing circuit of the line relay 45 of the connector extends from ground G^7 through winding 128, trunk conductor 129, shaft wiper 126, side switch wiper 104, thence to and through the operator's talking set L over a circuit previously traced, and back to side switch wiper 105, shaft wiper 125, trunk conductor 130 and through winding 131 of relay 45 to battery lead 86, and thence through battery B to ground G. The circuit which is closed through the relay 127 by relay 45 extends from ground G^8 through springs 133 and 134, 135 and 136 and through relay 127 to battery lead 86, and thence through battery B to ground G. The new holding ground for the release relays 110 and 23 of selectors E and D extends from ground G^9 at the connector through side switch wiper 137, springs 138 and 139 of relay 127 to trunk conductor 140, to the private bank contact upon which the private wiper 124 is resting, then through side switch wiper 140^a, from which one branch passes through relay 110 to battery, while another branch passes through side switch wiper 113 (in third position), and through relay 23 of selector D over a circuit previously traced.

When the operator's calling device is now operated for the third digit (2) the line relay 45 of the connector F is deënergized twice, whereupon the spring 133 momentarily engages the spring 141 twice. Each time the springs 133 and 141 engage, an energizing circuit is closed extending from ground G^8 through springs 133 and 141, 142 and 143 (these springs remaining in contact while the impulses are being sent in because the relay 127 is slow-acting),

private magnet relay 144, vertical magnet 43, side switch wiper 145 to battery lead 86, thence through the battery B to ground G. The vertical magnet receives two impulses of the circuit just traced and operates to raise the shaft and wipers 40, 41 and 42 two steps, and by permitting the off-normal spring 146 to engage contact point 147 extends a connection from release magnet 148 to the spring 209 of release relay 127. The private magnet relay 144, which is included in the energizing circuit of the vertical magnet, energizes upon the first impulse and closes an energizing circuit through the private magnet 149. This circuit extends from ground G^{10} through springs 150 and 151 and private magnet 149 to battery lead 86, thence through battery B to ground G. Since the relay 144 is slow-acting this energizing circuit of the private magnet is maintained as long as the impulses are being delivered to the vertical magnet. After the last of these impulses, the relay 144 has time to deënergize and open the circuit through the private magnet 149. The private magnet in turn deënergizes and permits the side switch to pass from first to second position. The side switch wiper 145, in passing from first to second position, transfers the battery connection from the vertical magnet 43 to the rotary magnet 44 in order that the rotary magnet 44 may be operated by the relay 45 for the last digit. When the calling device is operated for the last digit (0) the relay 45 is deënergized ten times. Since the side switch is now in second position, each time the relay 45 deënergizes a circuit is closed extending from ground G^{8} through springs 133 and 141, 142 and 143, private magnet relay 144, relay springs 152 and 153, rotary magnet 44, side switch wiper 145 to battery lead 86, thence through battery B to ground G. The rotary magnet 44 thus receives ten impulses and operates to rotate the wipers 40, 41 and 42 onto the contacts of the desired line #2220. The private magnet relay 144 being also included in the energizing circuit of the rotary magnet is energized by the first of this last series of impulses and again closes the energizing circuit of the private magnet 149. The relay 144 does not have time to deënergize until after the last impulse, when it opens the energizing circuit of the private magnet 149. If the called line is idle when the private margnet relay 144 deënergizes this last time, the private magnet also deënergizes and permits the side switch to pass to third position, whereby the connection is extended to the line of the called substation by means of the wipers 155 and 156. If, however, the called line is busy when the connector F seeks to make connection with it, the private magnet 149 does not deënergize when the relay 144 deënergizes, but remains pulled up, locking the side switch in second position and causing the calling subscriber to be given the busy signal as follows: Whenever a line is busy, either by reason of having made a call or of having been called, there is a guarding ground potential at its private bank contact at each of the connectors which has access to the said line. Thus, when the private wiper 42 comes to rest upon the contact of a busy line a circuit is closed from this grounded contact through the wiper 42, conductor 157, springs 159, 158, side switch wiper 160, contact point 161, contact point 162, side switch wiper 155, ringer relay springs 163 and 164, winding 193 of the back-bridge relay 46 to the battery lead 86, thence through battery B to ground G. The relay 46, upon energizing, forces the springs 135 and 165 out of engagement with the springs 136 and 166, respectively, and forces the springs 167 and 168 into engagement. The engagement of the springs 167 and 168 closes a new energizing circuit for the private magnet 149 independent of the relay 144. This circuit extends from the grounded private bank contact to the contact point 162, as previously traced, and thence through the springs 167 and 168 to and through the private magnet 149 to the battery lead 86, thence through battery B to ground G. Now, when the relay 144 deënergizes and permits the spring 150 to engage the spring 169 a circuit is closed extending from ground G^{10} through the said springs 150 and 169, private magnet springs 170 and 171, and through the relay 172 to the battery lead 86, thence through battery B to ground G. The relay 172 then energizes and shifts the spring 159 out of engagement with the spring 158 and into engagement with the spring 173, whereby the holding ground of the relay 46 and private magnet 149 is shifted from the guarded private bank contact to the ground G^{11}. The private magnet thus remains energized and the side switch locked in second position until the connector is released, when the movement of the side switch wiper 155 back to first position opens the locking circuit of the private magnet. As long as the side switch is thus locked in second position the operator receives the busy signal over a circuit extending from battery lead 86 through the secondary winding of the busy signaling machine M, springs 174 and 175, contact point 176, side switch wiper 156, ringer relay springs 177 and 178, thence over the heavy conductors through the operator's talking set and back through the winding 193 of the back-bridge relay 46 to the starting point. The primary circuit of the busy machine M extends from ground G^{23} through the interrupter 180, winding 232 and battery B back to ground.

Returning now to that stage of the calling operation when the connector wipers were advanced to the contacts of the desired line, before the private magnet relay 144 deenergized, it will be assumed that the called line is not busy. In that case there is no guarding ground potential on the private bank contacts, the back-bridge relay 46 does not pull up, and consequently the private magnet is deënergized as soon as the relay 144 restores to normal position, and the side switch passes to third position, thus completing the connection between calling and called lines. When the side switch wiper 160 passes to its third-position contact it establishes a guarding potential at the connector private bank contacts of the called line to prevent the said line from being called by any other connector. This guarding potential extends from ground G^{12} through side switch wiper 160, relay springs 159 and 158, conductor 157, wiper 42 and bank contact 181, and thence to the corresponding contact in the banks of all other connectors that have access to the line #2220. Also, from the contact 181 a conductor extends to and through relay 182 of line switch H to battery lead 86, thence through the battery B to ground G. The relay 182 is energized when this circuit is closed and operates to disconnect the line switch H from the lines of substation A′. When the side switch wiper 145 of the connector reaches third position a circuit is closed through the ringer relay 47. This circuit extends from ground G^{13} through interrupter 183, springs 165 and 166, relay 47 and side switch wiper 145 to battery lead 86, thence through the battery B to ground G. Since this circuit includes the interrupter 183 the relay 47 will be energized intermittently. Each time the ringer relay 47 is energized the springs 163 and 177 are forced out of engagement with springs 164 and 178 and into engagement with springs 184 and 185, respectively. By this shifting of the ringer relay springs the connection between the calling and called lines is opened and the ringer generator I is bridged across the called line, thus ringing the bell 53 at the called substation. The bell 53 will thus be rung intermittently until the receiver is removed from the hook. Also when the side switch of the connector passes from second to third position the wiper 137 transfers the holding ground of the release relays of the selectors D and E from ground G^9 to ground G^8. The holding circuit of these relays now extends from ground G^8 through the springs 133 and 134 of the relay 45, springs 135 and 136 of the relay 46, side switch wiper 137, relay springs 138 and 139, conductor 140, private wiper 124, side switch wiper 140^a and thence through the relays 110 and 23 of the switches E and D in multiple to battery, as previously traced. This ground G^8 also maintains the short-circuit of the relay 16.

After the operator has completed the call the key K′ is restored, thus cutting off the operator's calling device and bridging the supervisory relay 12 and windings 186 and 187 of the repeating coil N across the line instead. The relay 12 is thus included in the energizing circuit of the line relay 45 of the connector F, and consequently attracts its armature 188 onto the contact point 189, completing a circuit through the lamp 190. The relay 12 remains energized and the lamp 190 continues to glow until the called subscriber answers the call by removing his receiver from the hook. When the called subscriber removes his receiver from the switch hook, in answer to the call, the circuit of the ringer 53 is opened by the separation of the springs 58 and 57, and the primary talking circuit is bridged across the line instead. As soon as the ringer relay 47 deënergizes, after the receiver is removed from the switch hook, the called substation is provided with talking battery current over a circuit extending from ground G^{14} through the winding 192 of the back-bridge relay 46, ringer relay springs 178 and 177, side switch wiper 156, shaft wiper 41, line conductor 61, springs 57 and 59, impulse springs 52, primary of induction coil 51, transmitter 50, conductor 60, shaft wiper 40, side switch wiper 155, relay springs 163 and 164, and winding 193 of the back-bridge relay 46 to the battery lead 86, thence through battery B to ground G. The relay 46, which is included in this circuit, energizes, and by separating the springs 165 and 166 opens the circuit of the ringer relay 47 to prevent ringing current from being thrown on the line. Also, when the relay 46 energizes, the springs 135 and 136 are separated, thus removing the short-circuit from the resistance 194. The resistance 194 is thus introduced into the holding circuit of the release relays 127, 110 and 23. When the resistance 194 thus enters the circuit of the release relays the relay 16 is no longer short-circuited, but is also included in the circuit of the release relays in multiple with the resistance 194. The relay 16 then receives enough current to attract its armature 195 against the contact point 196. When the armature 195 thus engages the contact point 196 an energizing circuit is closed from ground G^{15} through the relay 14 to battery. The relay 14, upon energizing, attracts its armatures 83 and 77 out of engagement with contact points 84 and 76 and into engagement with contact points 197 and 198, respectively. This operation of the relay 14 disconnects the trunk conductors 75 and 74 from conductors 101 and 102 and connects them with the windings of relay 13. The relay 13 thereupon energizes and

bridges the relay 15 directly across the conductors 101 and 102 through the springs 199 and 200, thus maintaining the energizing circuit of the relay 15 and of the line relay 45 of the connector F. The energizing circuit of the relay 13 extends from ground G^{16} through the winding 201, contact 197, armature 83, trunk conductor 75, tip springs of jack j' and plug p', winding 186 of the repeating coil N, relay 12, winding 187, ring springs of plug p' and jack j', conductor 74, armature 77, contact 198 and winding 202 to battery lead 86, thence through battery B to ground G. Although the relay 13 energizes over this circuit its resistance is so great that enough current does not flow to maintain the supervisory relay 12 in its energized position, but allows the armature 188 to drop back from the contact point 189. When the armature 188 and contact point 189 are thus disengaged, the lamp 190 is extinguished, signifying to the operator that the called subscriber has answered the call.

After the subscribers are through conversing the operator is given a disconnect signal as follows: After the subscriber at the manual substation A restores his receiver to the switch hook the crank of the magneto 5 is again rotated. In this case the operation of the magneto 5 applies ringing current to the line in the same manner as when the call was started. In this case, however, since the plug p is in the jack j ringing current passes through the winding 203 of the supervisory relay 11, causing the armature 204 of said relay to be drawn into engagement with the contact point 205. The engagement of armature 204 with the contact point 205 closes a circuit extending from ground G^{17} through the sleeve contacts of the jack j and plug p, armature 204, contact point 205, thence through the lamp 206 in multiple with the winding 207 of the relay 11 to the battery lead 208, and thence through battery B to ground G. The relay 11 will thus remain energized and the lamp 206 lighted until the plug p is removed from the jack j.

When the called subscriber hangs up his receiver the energizing circuit of the back-bridge relay 46 is opened and the resistance 194 again short-circuited by the deënergization of said relay. As soon as the resistance 194 is short-circuited the relay 16 is again deprived of its energizing current (being connected directly to ground on both sides), and consequently the said relay deënergizes. The deënergization of relay 16 opens the energizing circuit of relay 14, which allows its armatures to fall back and again connect the trunk conductors 75 and 74 with the conductors 101 and 102, whereupon the supervisory relay 12 (Fig. 1) again energizes in series with relays 15 and 45. The energization of relay 12 again lights the lamp 190. The simultaneous glowing of lamps 190 and 206 signifies to the operator that both subscribers have hung up their receivers and that the connection may be released. The operator then withdraws the plugs p and p' from their respective jacks and the automatic switches are automatically restored as follows: The removal of plug p' from jack j' destroys the energizing circuit of the relay 15 and of the line relay 45 of the connector F. These two relays consequently deënergize and open the holding circuit of the release relays 127, 110 and 23 of the switches F, E and D, and these relays deënergize after a short interval to close the energizing circuits of the release magnet of their respective switches. The energizing circuit of the release magnet 148 of the connector F extends from ground G^8 through springs 133 and 141, 142 and 209, off-normal springs 146 and 147 and magnet 148 to battery lead 86, thence through battery B to ground G. The release magnet 27 of the second selector E is energized over a circuit extending from ground G^5 through the springs 107 and 108, 115 and 116, magnet 27, off-normal springs 119 and 120, to the battery lead 86, and thence through battery B to ground G. The release magnet 20 of the first selector D is energized over a similar circuit. The magnets 148, 27 and 20, upon energizing, immediately restore the mechanism of their respective switches to normal position. When the shaft of each switch reaches its normal position the circuit of its release magnet is opened by the separation of the off-normal springs 146 and 147, 120 and 119, 37 and 39. Of course, as soon as the plugs p and p' are removed from the jacks j and j' the supervisory relays 11 and 12 are deënergized and the lamps 206 and 190 extinguished.

If the manual subscriber wishes to call an automatic subscriber of the same exchange the cord circuit O′ is used. In this case the operator is signaled in the same manner as previously explained. The trunk leading from the jack j^4 to the local first selector D′ is not provided with a group of relays C as was the trunk leading to the distant exchange, but the plug p^4 and the jack j^4 are each provided with a third conductor, and the cord circuit O′ is provided with a relay 62 which, when the plug p^4 is inserted in the jack j^4, is connected with the selector D′ in the same manner as is the relay 16 with the selector D (Fig. 2). In order to call the local automatic subscriber the operator inserts the plug p^4 into the jack j^4, throws the key K^2 and operates the calling device a' in the usual manner. The operation of the calling device for the first digit effects the operation of the selector D′ in the same manner as the selector D was operated for the first digit of the number 2220. It is as-

sumed that from the banks of the selector D′ trunks lead to connector switches similar to the connector switch F (Fig. 3). The operation of the calling device for the last two digits of the number affects the connector in the same manner as when #2220 was called, and the connection is thereby extended to the called line. After the connection has been completed the key K^2 is restored, thus bridging the supervisory relay 210 across the line in series with two windings of the repeating coil N′. As soon as the relay 210 is thus bridged across the line it energizes in series with the line relay of the connector, just as the relay 12 was energized in series with relay 45 in the previous case. When the relay 210 energizes it completes a circuit through the lamp 211, said circuit extending from ground G^{18} through armature 212, contact 213, armature 214, contact 215, lamp 211 and to battery lead 216, thence through battery B to ground G. After the connection has been completed and before the called subscriber answers, the relay 62 is short-circuited by the ground G^8 at the connector just as was the relay 16. Also, as soon as the called subscriber answers, the relay 62 and resistance 194 are connected in multiple, just as was the relay 16 and resistance 194 in the former case. The relay 62 thereupon energizes and, by attracting the armature 214 away from the contact 215, opens the circuit of the lamp 211, thus indicating to the operator that the called subscriber has answered. After the conversation is completed the operator is given the disconnect signal in practically the same manner as when the subscriber at substation A called the subscriber at substation A′. The actuation of the generator at substation A^2 energizes the relay 217, which causes the lamp 218 to glow just as the relay 11 and lamp 206 were operated at the substation A. When the called subscriber hangs up his receiver the back-bridge relay of the connector deënergizes and again short-circuits the resistance 194. When the resistance 194 is short-circuited it again causes the relay 62 to be short-circuited also, and the said relay deënergizes. When the relay 62 deënergizes it again closes the circuit of the lamp 211 to notify the operator that the called subscriber has hung up his receiver. Upon seeing the simultaneous glowing of the two lamps 211 and 218 the operator removes the plugs p^3 and p^4 from their jacks and the release of the automatic switches follows in the manner already explained.

It is understood, of course, that the exchange may be provided with any suitable cord circuit for establishing connection between two manual subscribers, but as my invention is not concerned with such a connection I have shown no such cord circuit.

To provide for calls from automatic subscribers to manual subscribers, jacks j^5 are provided which are connected to trunks leading from the banks of automatic selector switches in both the local exchange and the distant exchange. When the automatic subscriber desires to call a manual subscriber the substation calling device is operated in the usual manner for the number of the trunks leading to the manual switchboard. The automatic selector switch operates in response to this operation of the calling device to select an idle trunk leading to a jack j^5. As soon as the connection is thus established with jack j^5 the calling substation is provided with talking battery current over a circuit extending from ground G^{20} through winding 219 of relay 220, conductor 221, thence through the calling substation and back over conductor 222 and through winding 223 of relay 220 to battery lead 216, thence through battery B to ground G. The relay 220 energizes upon the completion of this circuit and operates to close springs 224 and 225 into engagement with springs 226 and 227, respectively. The engagement of springs 225 and 227 connects ground G^{21} with conductor 231 for maintaining the release relay of the automatic selector switch energized. The engagement of springs 224 and 226 closes a circuit extending from ground G^{22} through springs 228 and 229, 224 and 226, and lamp 230 to battery lead 216, thence through battery B to ground G. The consequent glowing of lamp 230, upon the completion of this circuit, notifies the operator that some one is calling into this jack. The operator then inserts a plug of one of the cords in the jack j^5, inquires the number of the calling substation and the number desired, and then asks the calling subscriber to hang up his receiver. The hanging up of the receiver at the calling substation breaks the energizing circuit of relay 220, whereupon the said relay deënergizes. The separation of springs 225 and 227 by the deenergization of relay 220 opens the energizing circuit of the release relay of the selector switch, whereupon the said switch is released in the usual manner. After ascertaining the number of the calling and desired substations, the operator removes the plug from jack j^5 and inserts the plug j^3 of cord O′ or plug j of cord O (depending upon whether the calling substation belongs to the local or to the distant exchange) into the jack of the desired line and operates the ringing key K^3 or K to signal the substation. The operator then inserts the other plug of the cord into a jack j^4 or j' (also depending upon the exchange to which the calling substation belongs) and proceeds to call the original calling substation in the usual manner. After the conversation is completed the op-

erator is given the disconnect signal in the manner already explained, and the automatic switches are released upon the removal of the plug, as in the previous cases.

From the foregoing it will be seen that the supervisory control, when the call is from one exchange to another, is exercised in part over the third conductor extending back from the connector F to the group of relays C, and for the remainder of the distance over the two sides of the trunk line extending between the two exchanges. The called subscriber, in answering, introduces the resistance 194 into one circuit, thereby removing the short-circuit around the relay 16 and increasing the current-flow in this relay sufficiently to cause it to energize and close the local circuit through the relay 14. This part of the supervisory control, it will be seen, is not exercised over the two sides of the talking circuit, but simply over the third conductors of the trunks between the relays C and the connector F, which third conductors are also used for releasing purposes. The energizing of the relay 14 serves to bridge the high resistance coils 201 and 202 across the trunk line 74 and 75, and to thereby decrease the current-flow in the relay 12 of the cord circuit O, which serves to open the circuit of the lamp 190. Thus, as stated, the supervisory control between the two exchanges is exercised over a metallic circuit including the two sides of the trunk line in series. The relay 13 must be in bridge of the said trunk line during conversation, so as to hold the relay 15 in bridge of the trunk circuit to the connector, whereby the operator at the cord circuit O may, by withdrawing the plug, release the automatic switches when the conversation is terminated. When the plug is withdrawn the relay 13 is deënergized, and the opening of the bridge in which the relay 15 is included serves to deënergize all of the release relays heretofore described, and thus release the switches. When the call is local, as from one subscriber to another in the same exchange, then the arrangement shown in Fig. 4 is used, in which case the supervisory control is exercised entirely over the third conductors of the trunk lines. In this case the cord circuit shown in Fig. 4 is used, and the relay 62 is energized by the removal of the short-circuit which exists until the resistance 194 is introduced therein by the response of the called subscriber. Thus, with either method and for either kind of a call the lamp signal at the operator's cord circuit is retired when the called subscriber answers. As shown, this cord circuit is that of the originating operator, but it will be understood that it may be that of a trunking operator without departing from the spirit of my invention.

What I claim as my invention is:—

1. In a telephone system, a connector provided with a side switch having three positions, an operator's supervisory relay, a supervisory signal, means for energizing said relay to render said signal operative, and means operative after the arrival of the side switch at third position for deënergizing said relay to render said signal inoperative.

2. In a telephone system, a cord circuit, a trunk line, a supervisory apparatus at the cord circuit, a called line, means for extending connection to said line, a third conductor intermediate the trunk line and the called line, and relays whereby the control of such supervisory apparatus by the called subscriber includes circuits that are partly over said third conductor and partly over the two sides of said trunk line.

3. In a telephone system, means for extending connection to a called line, said means including a cord circuit, a supervisory apparatus therefor, a trunk line, a relay individual to said trunk line, a circuit for shunting or short-circuiting said relay, a resistance and means for introducing it in said circuit when the called subscriber answers to energize said relay, and means controlled by said relay for placing resistance in series with the trunk line to control the said supervisory apparatus.

4. In a telephone system, a cord circuit, a supervisory apparatus therefor, means including an automatic switch for extending a connection from said cord to a called subscriber's line, a trunk line comprising three parallel conductors extending to said switch, and means for controlling said supervisory apparatus over the third conductor to the exclusion of the other two of said trunk line when the called subscriber answers.

5. In a telephone system, a cord circuit, a supervisory relay therefor, a trunk line having a third conductor, a circuit for energizing said relay, which circuit includes said third conductor, a circuit for shunting or short-circuiting said relay to prevent the same from energizing, a resistance and means for introducing it in said short-circuit when the called subscriber answers, and a supervisory signal controlled by said relay.

6. In a telephone system, a connector provided with a local circuit, a resistance in said circuit, a normally closed short-circuit around said resistance, means for opening said short-circuit when the called subscriber answers, and a supervisory signal controlled by the opening of said short-circuit.

7. In a telephone system, a trunk line, condensers therein, an automatic switch for said trunk line for extending a connection to the called subscriber, a low resistance normally open bridge across said trunk line between said condensers and automatic switch, a high

resistance relay controlling said bridge, means controlled by the called subscriber for placing said high resistance relay in bridge of the trunk line at the other side of said condensers, a source of current included in said last-mentioned bridge, and a relay in said first-mentioned bridge, this last-mentioned relay controlling the said means for bridging the high resistance relay across the trunk line.

8. In a telephone system, manual and automatic means for establishing a talking circuit between calling and called substations, a manual switchboard operator's supervisory signal, a third conductor, means whereby the control of said supervisory signal by the called subscriber is partly over the third conductor and partly over the two sides of the talking circuit in series.

9. In a telephone system, a talking circuit between calling and called substations, a manual switchboard operator's supervisory signal, a third conductor extending parallel with the talking circuit at the exchange or central station, means responsive to the called subscriber for first controlling the circuit over said third conductor for supervisory purposes, and means for then transferring the circuit control to the two sides of the talking circuit in series to control said signal.

10. In a telephone system, a talking circuit between calling and called substations, a manual switchboard operator's supervisory signal, a circuit for controlling said signal, said circuit including portions of the two sides of the talking circuit in series, another circuit which excludes all portions of the talking circuit, means responsive to the called subscriber for first controlling said last-mentioned circuit, and means controlled over this circuit for then controlling the said first-mentioned circuit to control the said signal.

11. In a telephone system, a calling manual switchboard subscriber's line, a called automatic exchange subscriber's line, a manual switchboard provided with means for answering the call, means including one or more switches controllable from said switchboard for completing the connection to the called line, a supervisory signal at the manual switchboard, a talking circuit including the two lines and the connection between the same, a supervisory circuit for controlling said signal, said circuit including portions of the two sides of the talking circuit in series, another circuit which excludes all portions of the talking circuit, means in said last-mentioned circuit for controlling the said supervisory circuit, and means responsive to the called subscriber for controlling the said circuit which excludes all portions of the talking circuit to control the said supervisory signal.

12. In a telephone system, a manual switchboard, a called telephone line, means controllable at said switchboard for automatically extending a talking connection therefrom to the called line, a supervisory signal at the said switchboard, a supervisory circuit for controlling the said signal, said circuit including portions of the two sides of said talking connection in series, a relay for controlling said circuit, and means responsive to the called subscriber for controlling said relay, said last-mentioned means including a circuit from which all portions of the said talking connection are excluded.

13. In a telephone system, a manual switchboard provided with a supervisory signal, a metallic line circuit for controlling said signal, a talking circuit which includes the two sides of said line circuit, automatic switches for controlling said talking circuit, means including third conductors extending from one switch to another for releasing the same, and means including said third conductors for controlling said metallic line conductors to control the said signal.

14. In a telephone system, calling and called telephone lines, instrumentalities for establishing a combined automatic and manual trunking connection between the two lines, a supervisory signal for the operator who controls the manual portion of the connection, and means including a plurality of circuits by which the called subscriber controls said signal, one circuit controlling another, all portions of the said trunking connection being excluded from one circuit, and another of said circuits including a portion of the said connection.

15. In a telephone system, a supervisory signal, a two-wire trunk line, a three-wire trunk line, devices for including said trunk lines in a talking connection between calling and called substations, with the third wire of the last-mentioned trunk line excluded from the path of the voice-currents, and means whereby the control of said signal is in part over said third wire and in part over both sides of the first-mentioned trunk line.

16. In a telephone system, a manual switchboard operator's supervisory signal, a two-wire trunk line, a three-wire trunk line, means for including said trunk lines in a talking connection between calling and called substations, with the third wire of the last-mentioned trunk line excluded from the path of the voice-currents, and means whereby the control of said signal by the called subscriber is partly over the third wire and partly over the two sides of the first-mentioned trunk line, the three-wire trunk line being located between the two-wire trunk line and the called subscriber's line.

17. In a telephone system, means including a trunk line for extending a connection to the called line, a condenser in each side of

said trunk line, a relay connected around one of said condensers, a second relay, normally closed contacts in said connection controlled by said second relay, a third relay controlling the circuit of said second relay, and means for energizing said third relay when the called subscriber answers to control said first relay.

18. In a telephone system, an operator's cord circuit, a supervisory signal therefor, means including a trunk line adapted to be connected with said cord circuit for extending a connection to a called line, means in said trunk line for controlling said supervisory signal, said means including a relay adapted to be energized over said trunk line, a second relay for controlling said relay, and a third relay adapted to be energized upon the response of the called subscriber to render said signal inoperative and to control said first relay.

19. In a telephone system, subscribers' lines, means including an operator's cord circuit and a trunk line for establishing a connection between two of said lines, a third conductor in said trunk, a supervisory signal, means for applying ground to both ends of said trunk, means for inserting a resistance in one of said ground connections, and means controlled thereby for controlling said supervisory sigal.

20. In a telephone system, subscribers' lines, means including an operator's cord circuit and a trunk line for establishing a connection between two of said lines, a third conductor in said trunk, a supervisory signal, means for applying ground to both ends of said trunk, means controlled by the response of the called subscriber for inserting a resistance in one of said ground connections, and means controlled thereby for controlling said supervisory signal.

Signed by me at Chicago, Cook county, Illinois, this 29 day of December, 1909.

TALBOT G. MARTIN.

Witnesses:

EDWARD D. FALES,

ARTHUR J. RAY.