United States Patent [19]

Botterell et al.

[11] **3,912,874**

[45] **Oct. 14, 1975**

[54] **CONFERENCE ARRANGEMENT**

[75] Inventors: **John Joseph Botterell,** Fairfax, Va.; **Robert Lewis Dayton,** Bowie, Md.; **James Raymond Guyler,** Woodbridge, Va.

[73] Assignee: **American Telephone and Telegraph Company,** New York, N.Y.

[22] Filed: **June 4, 1974**

[21] Appl. No.: **476,417**

[52] **U.S. Cl.** ..... **179/18 BC**
[51] **Int. Cl.**[2] **H04M 3/56**
[58] **Field of Search** ..... 179/18 BC

[56] **References Cited**

UNITED STATES PATENTS

3,504,130 3/1970 Gorgas et al. ..... 179/18 BC

Primary Examiner—William C. Cooper
Attorney, Agent, or Firm—C. H. Davis

[57] **ABSTRACT**

A conference arrangement for use with a telephone switching center is disclosed. The conference arrangement comprises a transmission bridge for interconnecting an originator's port circuit with a plurality of conferee port circuits. A dial pulse register and a multifrequency receiver and decoder are associated with the originator's port circuit and each conferee port is equipped with an automatic dialer that can be programmed to summon the conferees via regular and alternate telephone numbers.

The originator is connected to the bridge by dialing the telephone number assigned to the bridge including a digit for establishing the precedence level of the conference call and a pattern number which selects the group of conferees to be summoned by the automatic dialers.

Once connected to the conference arrangement, the originator can transmit tones to the multifrequency receiver and decoder to selectively control all ports of the bridge and any other similar bridges that are connected to the bridge via a conferee port. Among other things, the originator can transfer himself and a selected conferee to an ad-lib bus for private consultation, place the conference in a broadcast mode and insert different pattern numbers in selected ones of the automatic dialers to summon other conferees. The originator can also select a conferee port mode to directly dial the telephone number of a conferee.

18 Claims, 17 Drawing Figures

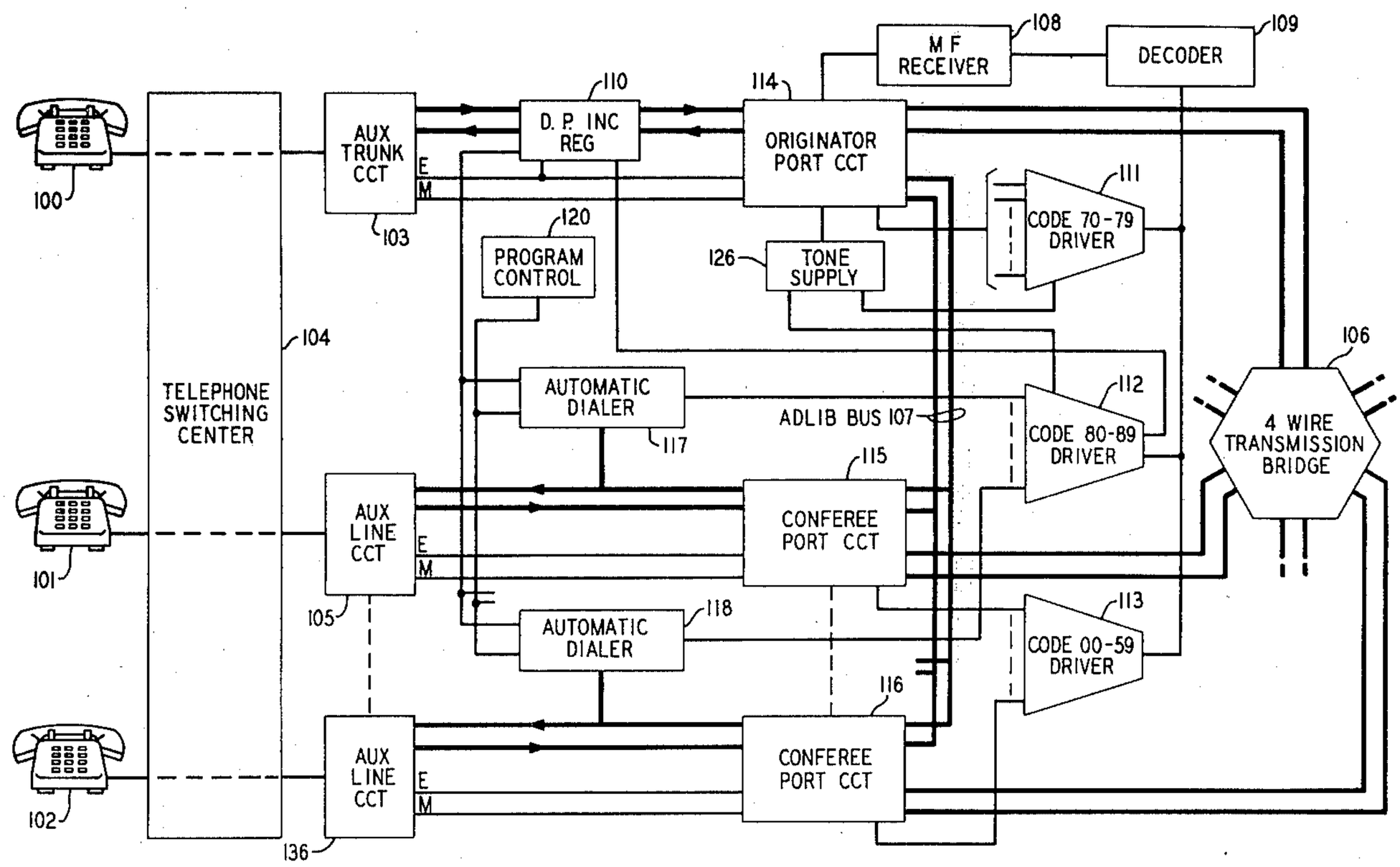

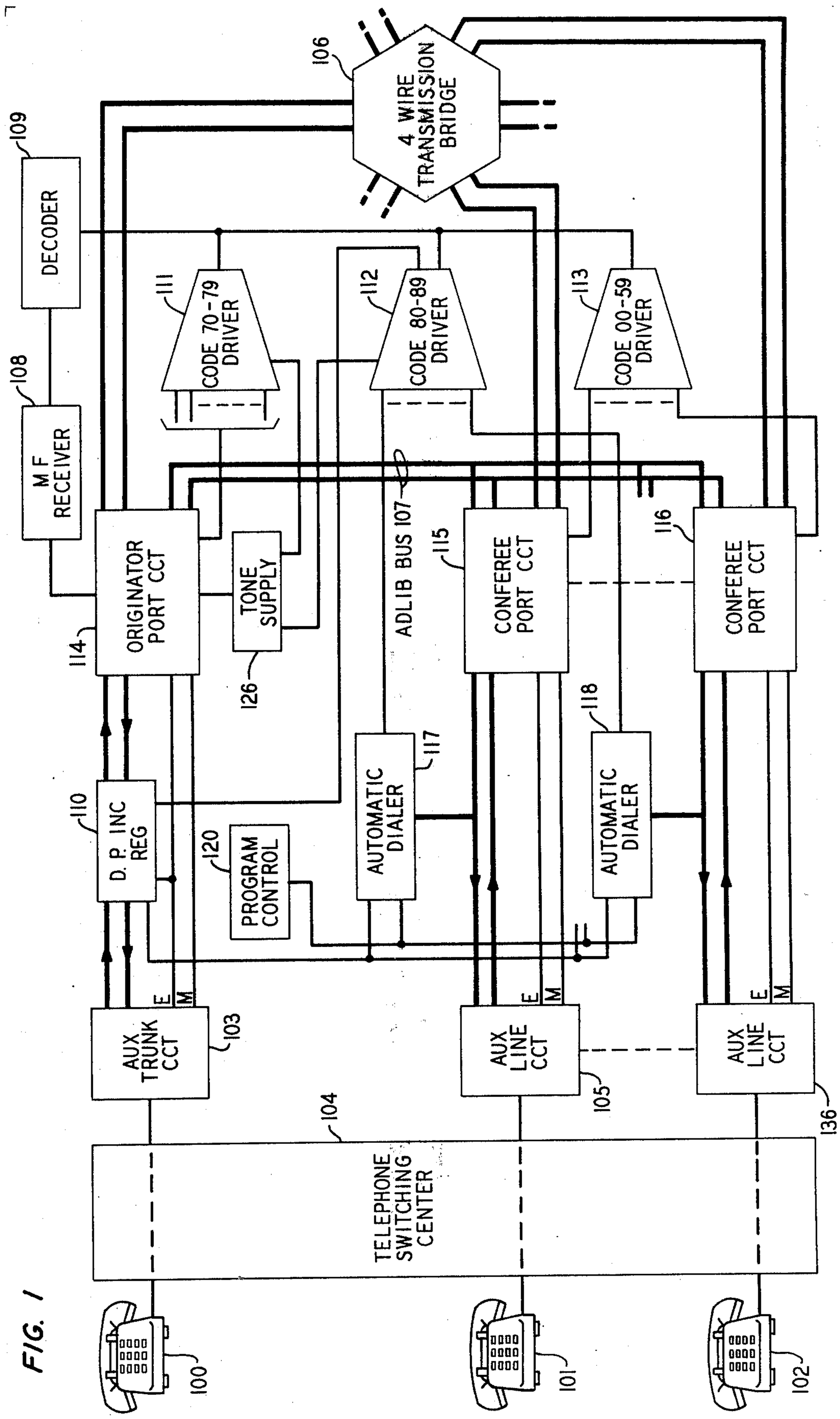
4 WIRE TRANSMISSION BRIDGE
106
DECODER
109
M F RECEIVER
108
CODE 70-79 DRIVER
111
CODE 80-89 DRIVER
112
CODE 00-59 DRIVER
113
ADLIB BUS 107
ORIGINATOR PORT CCT
114
TONE SUPPLY
126
CONFEREE PORT CCT
115
CONFEREE PORT CCT
116
D. P. INC REG
110
PROGRAM CONTROL
120
AUTOMATIC DIALER
117
AUTOMATIC DIALER
118
AUX TRUNK CCT
103
AUX LINE CCT
105
AUX LINE CCT
136
E
M
TELEPHONE SWITCHING CENTER
104
100
101
102

FIG. 1

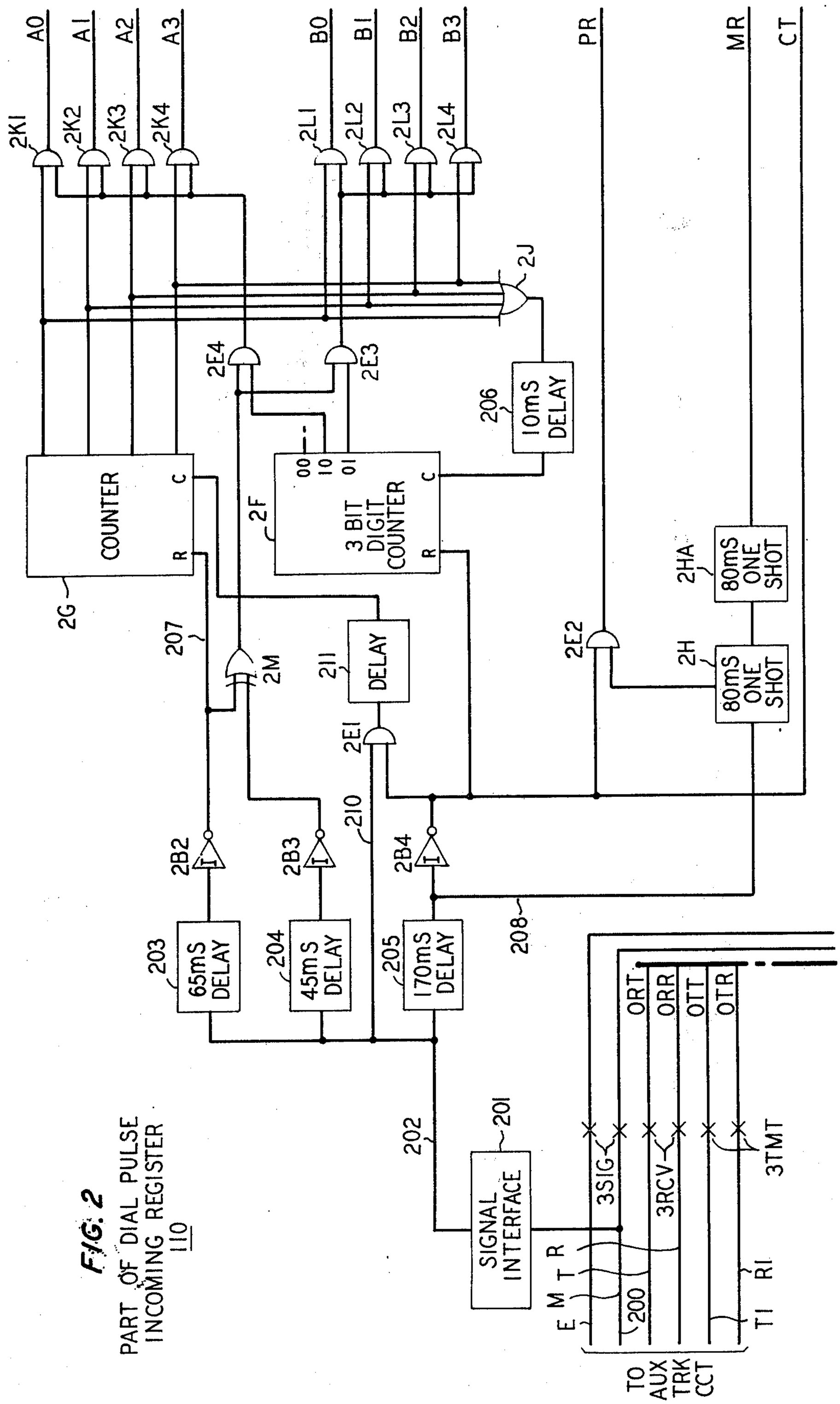

FIG. 2
PART OF DIAL PULSE INCOMING REGISTER 110

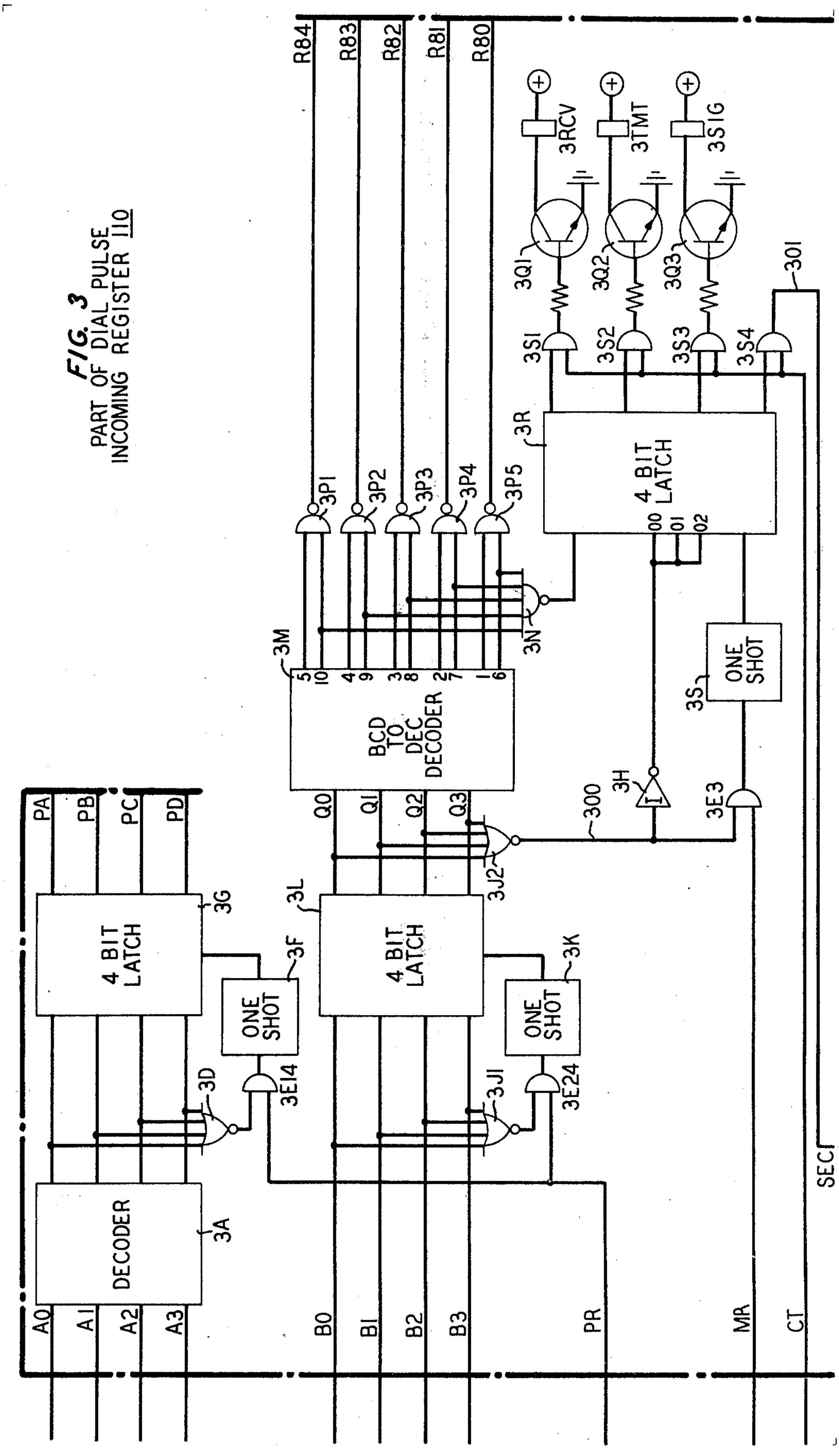

FIG. 3
PART OF DIAL PULSE INCOMING REGISTER 110

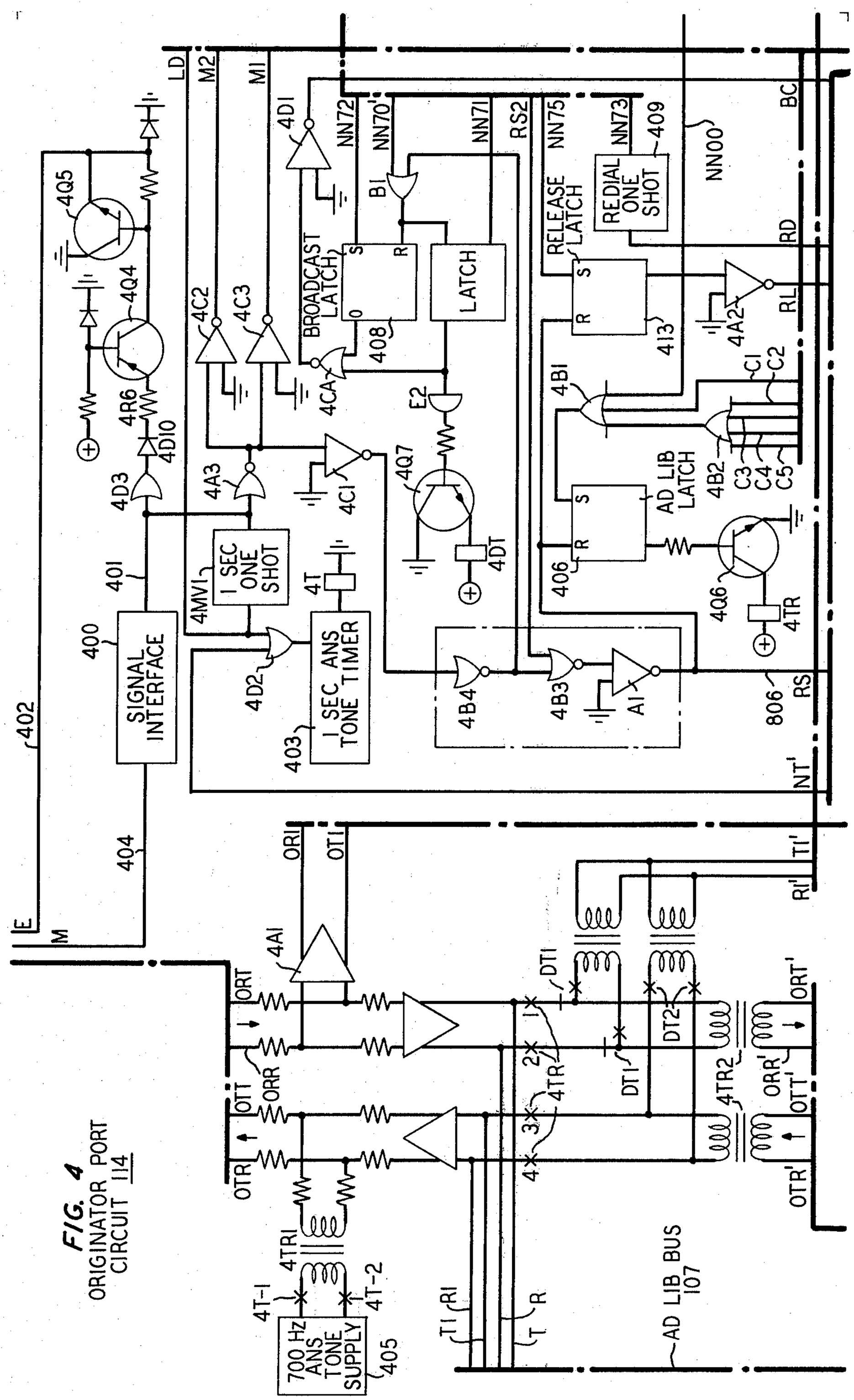

FIG. 4
ORIGINATOR PORT CIRCUIT 114

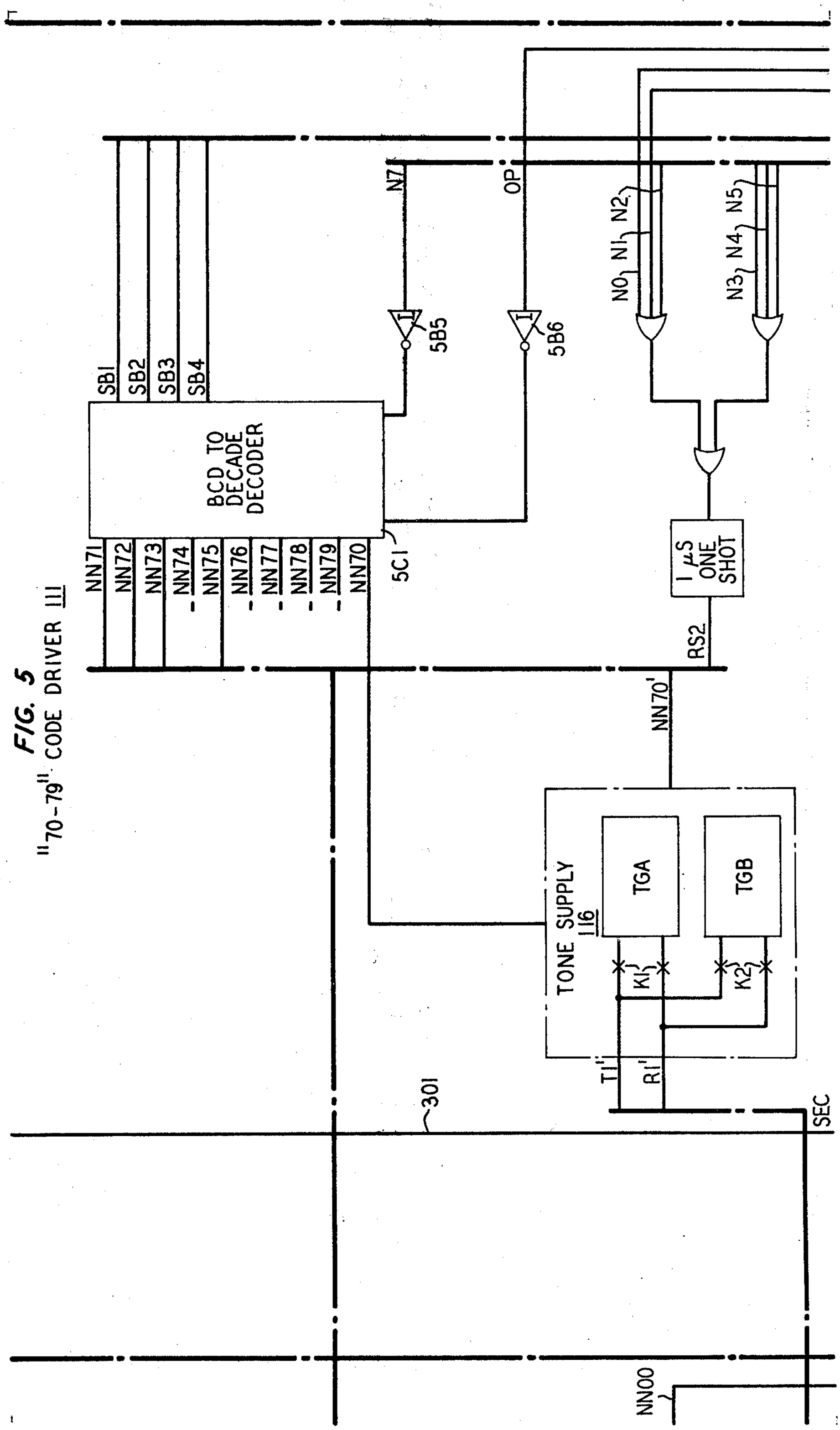

FIG. 5
"70-79" CODE DRIVER 111

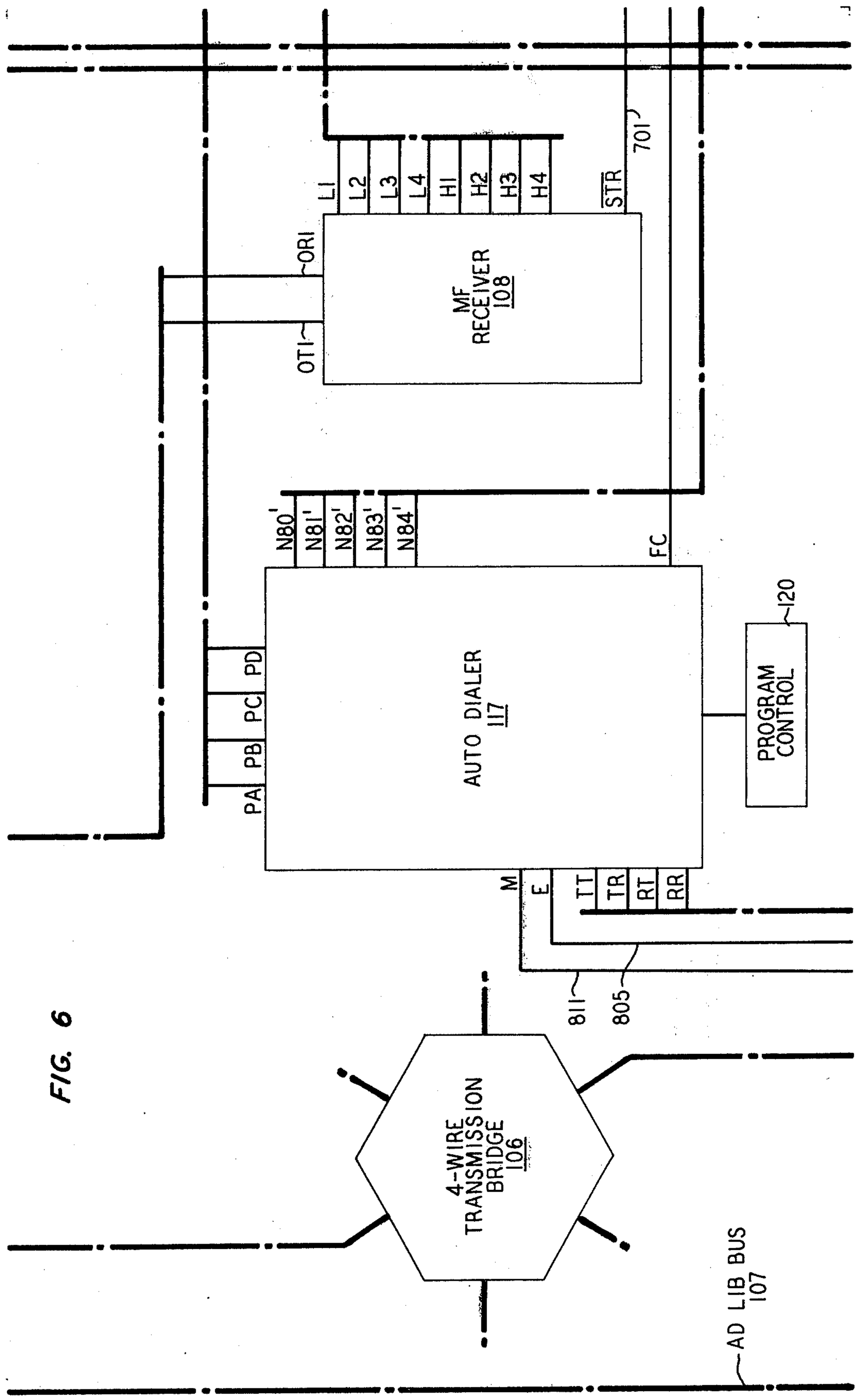
MF RECEIVER 108
L1
L2
L3
L4
H1
H2
H3
H4
STR
701
ORI
OTI
N80'
N81'
N82'
N83'
N84'
FC
AUTO DIALER 117
PA
PB
PC
PD
PROGRAM CONTROL
120
M
E
TT
TR
RT
RR
811
805
4-WIRE TRANSMISSION BRIDGE 106
AD LIB BUS 107

FIG. 6

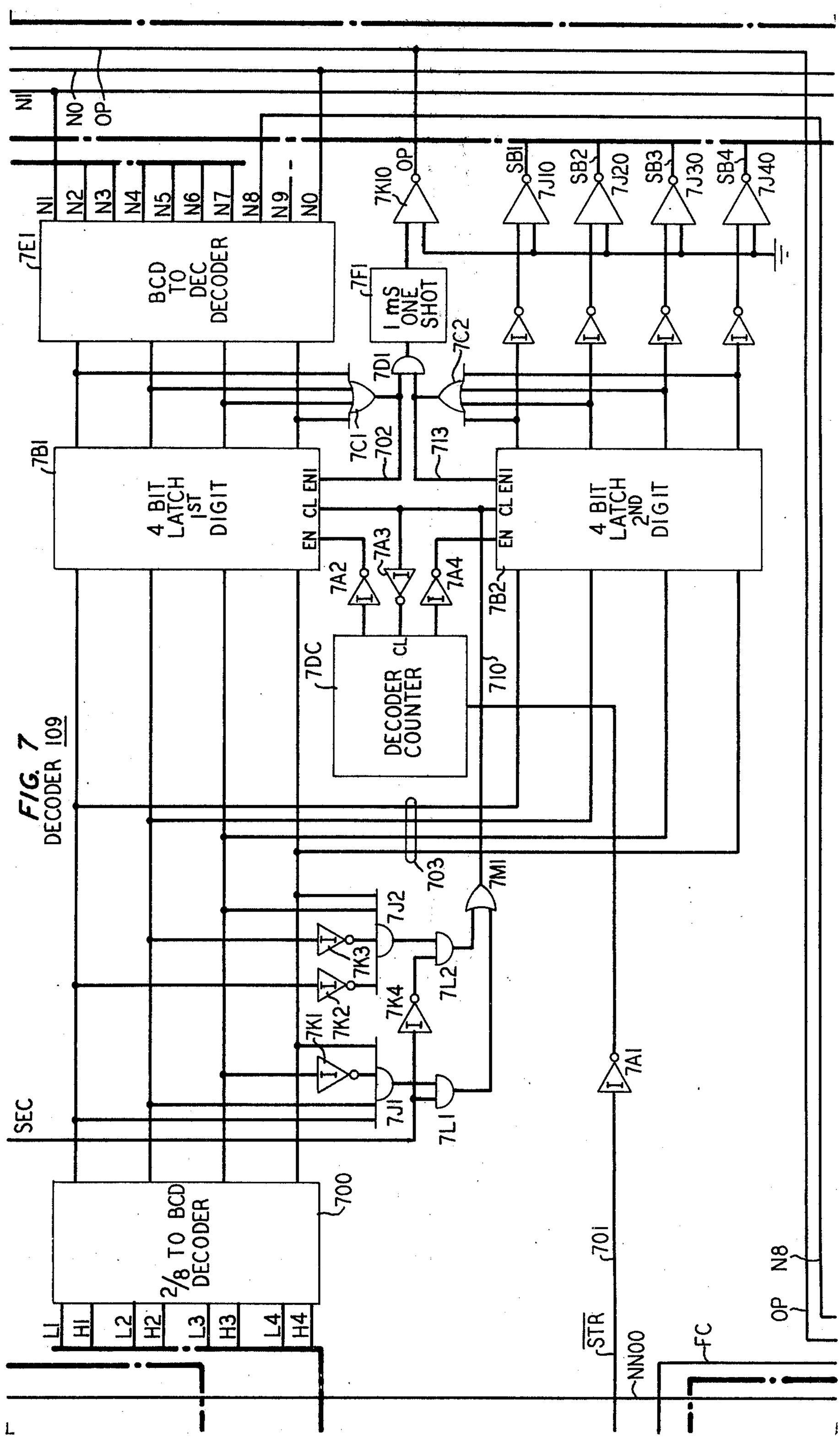

FIG. 7
DECODER 109

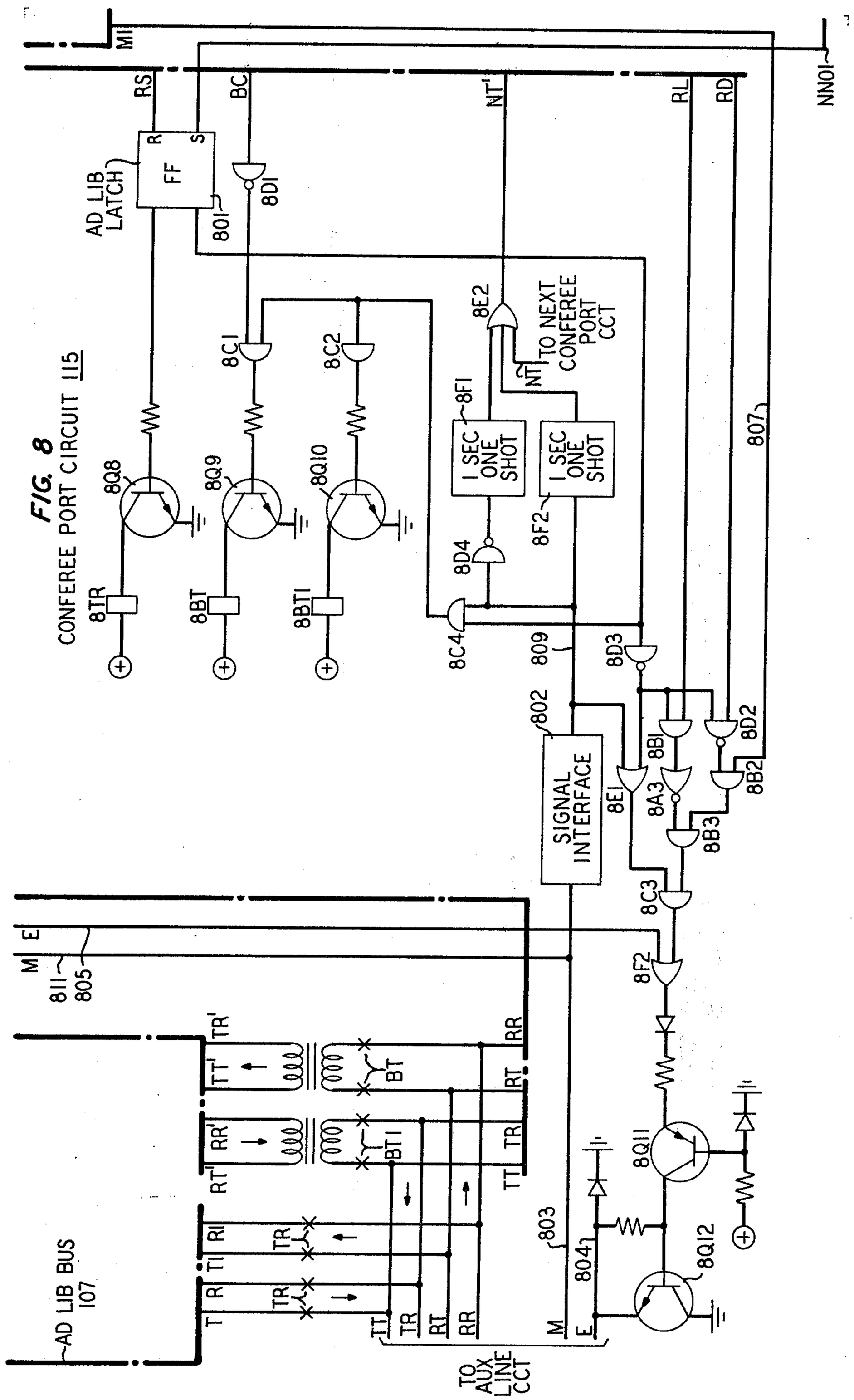
FIG. 8
CONFEREE PORT CIRCUIT 115
AD LIB LATCH
FF
R
S
RS
BC
NT'
RL
RD
MI
NNOI
8DI
801
8C1
8C2
8E2
TO NEXT CONFEREE PORT CCT
NT
8F1
1 SEC ONE SHOT
1 SEC ONE SHOT
8F2
807
8Q8
8Q9
8Q10
8TR
8BT
8BT1
8D4
8C4
809
8D3
802
SIGNAL INTERFACE
8E1
8B1
8A3
8B3
8D2
8B2
8C3
8F2
E
M
811
805
TR'
TT'
BT
RR
RT
RR'
BT1
TR
TT
RI
TI
R
T
803
804
8Q11
8Q12
AD LIB BUS 107
TO AUX LINE CCT

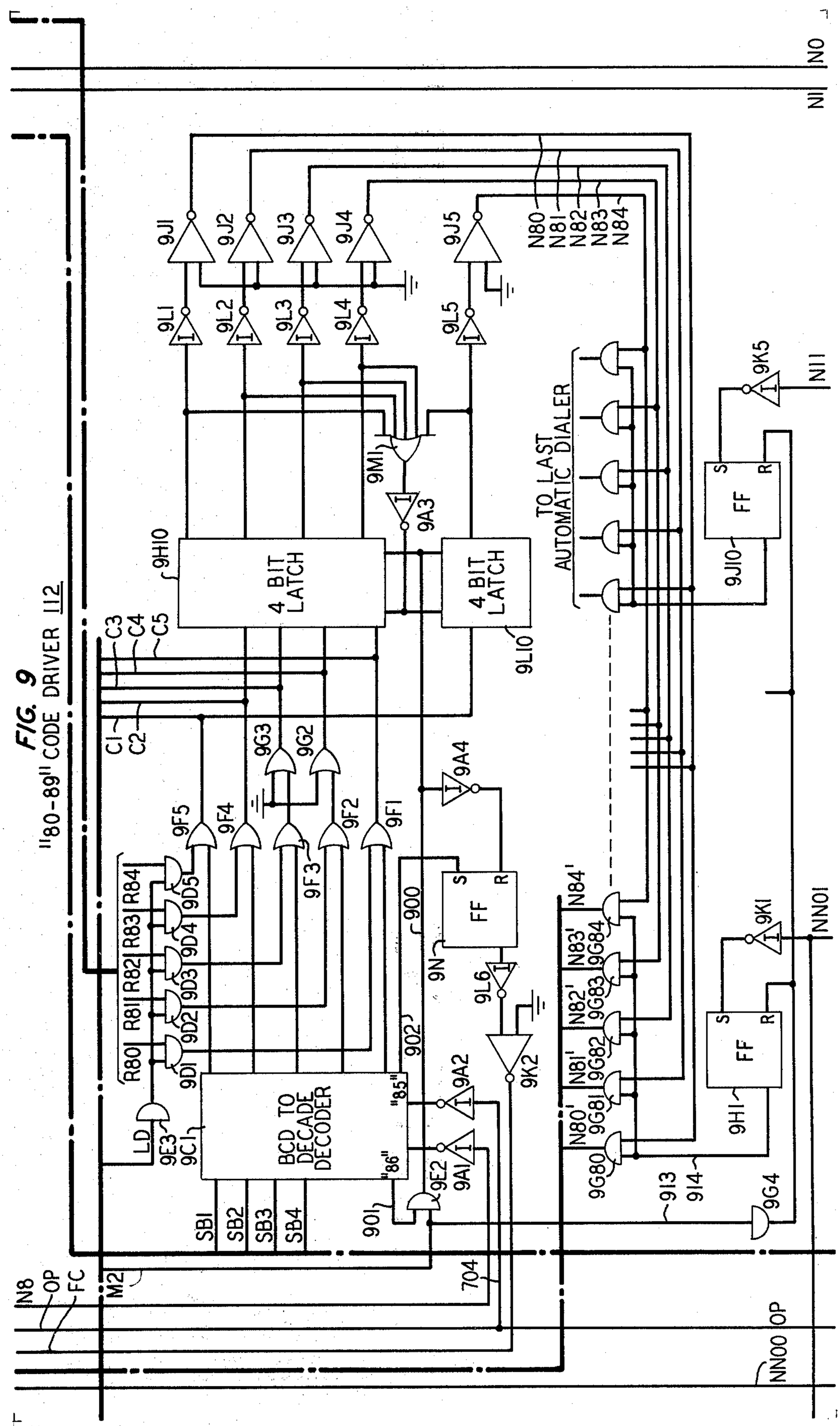
FIG. 9
"80-89" CODE DRIVER 112
NO
NI
9J1
9J2
9J3
9J4
9J5
N80
N81
N82
N83
N84
9L1
9L2
9L3
9L4
9L5
9K5
N11
9M1
9A3
9H10
4 BIT LATCH
4 BIT LATCH
9L10
TO LAST AUTOMATIC DIALER
FF
9J10
C1
C2
C3
C4
C5
9G3
9G2
9A4
9F5
9F4
9F3
9F2
9F1
R80
R81
R82
R83
R84
9D1
9D2
9D3
9D4
9D5
900
9N
9L6
9K2
902
9A2
9E2
9A1
901
LD
9E3
9C1
BCD TO DECADE DECODER
"85"
"86"
SB1
SB2
SB3
SB4
N84'
N83'
N82'
N81'
N80'
9G84
9G83
9G82
9G81
9G80
9K1
NN01
9H1
913
914
9G4
704
IN8
OP
FC
M2
NN00
OP

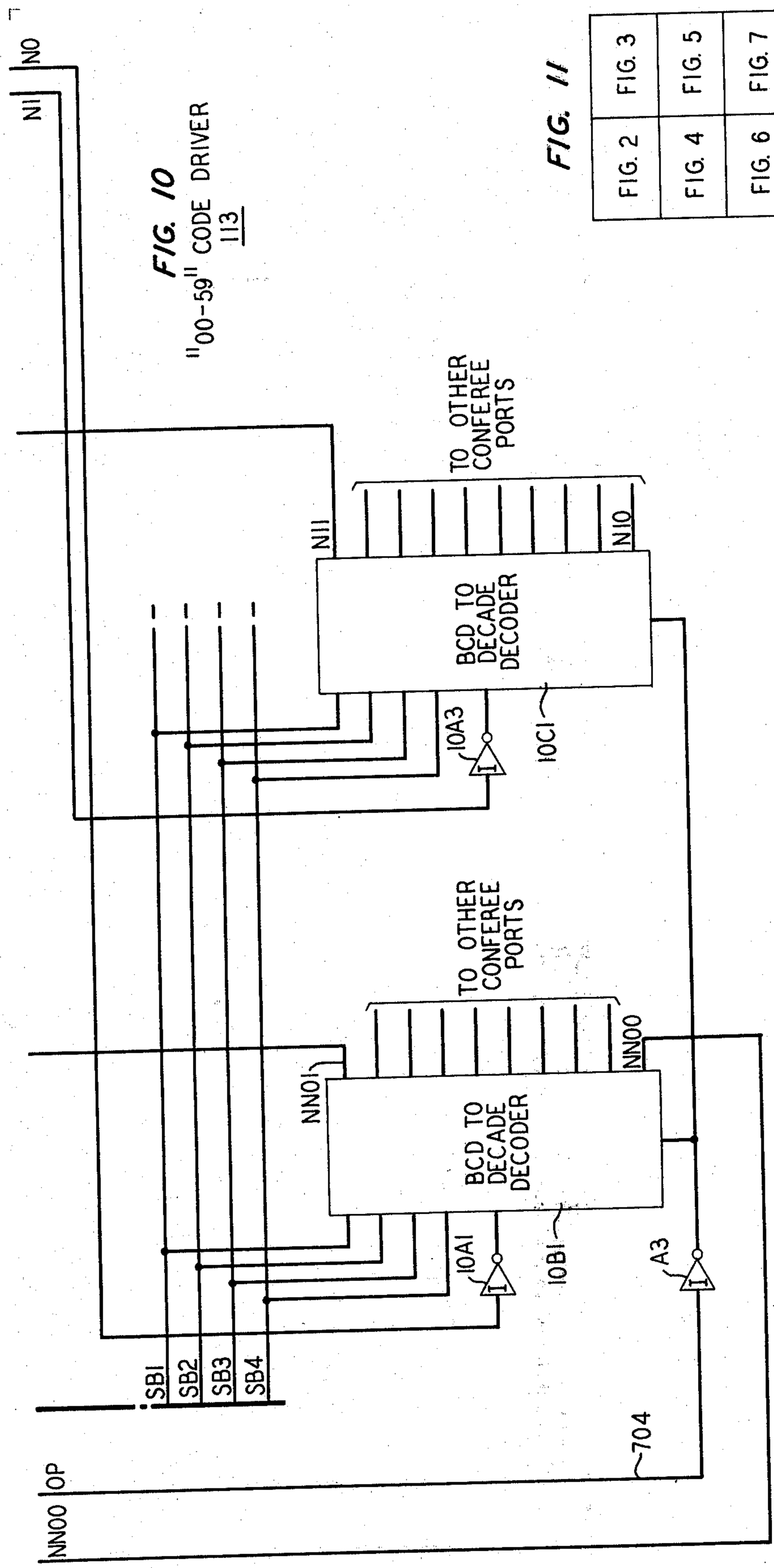
FIG. 10
"00-59" CODE DRIVER
113
N1
N0
TO OTHER CONFEREE PORTS
N11
N10
BCD TO DECADE DECODER
10A3
10C1
TO OTHER CONFEREE PORTS
NN01
NN00
BCD TO DECADE DECODER
10A1
10B1
A3
SB1
SB2
SB3
SB4
704
OP
NN00

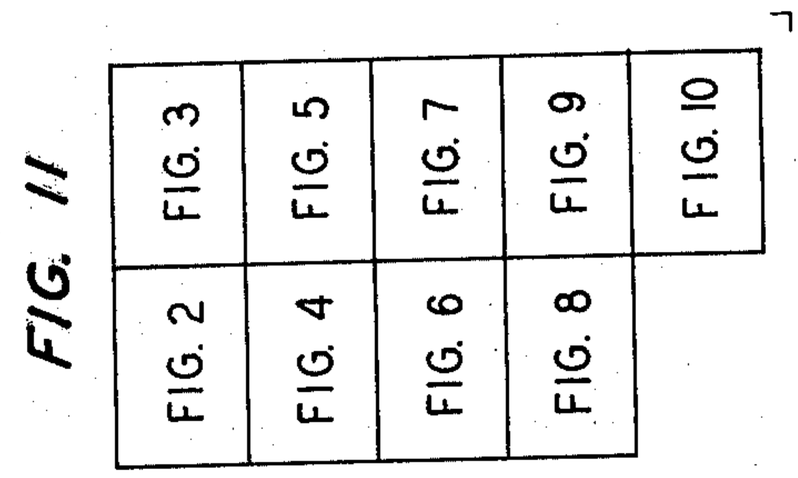
FIG. 11
FIG. 2
FIG. 3
FIG. 4
FIG. 5
FIG. 6
FIG. 7
FIG. 8
FIG. 9
FIG. 10

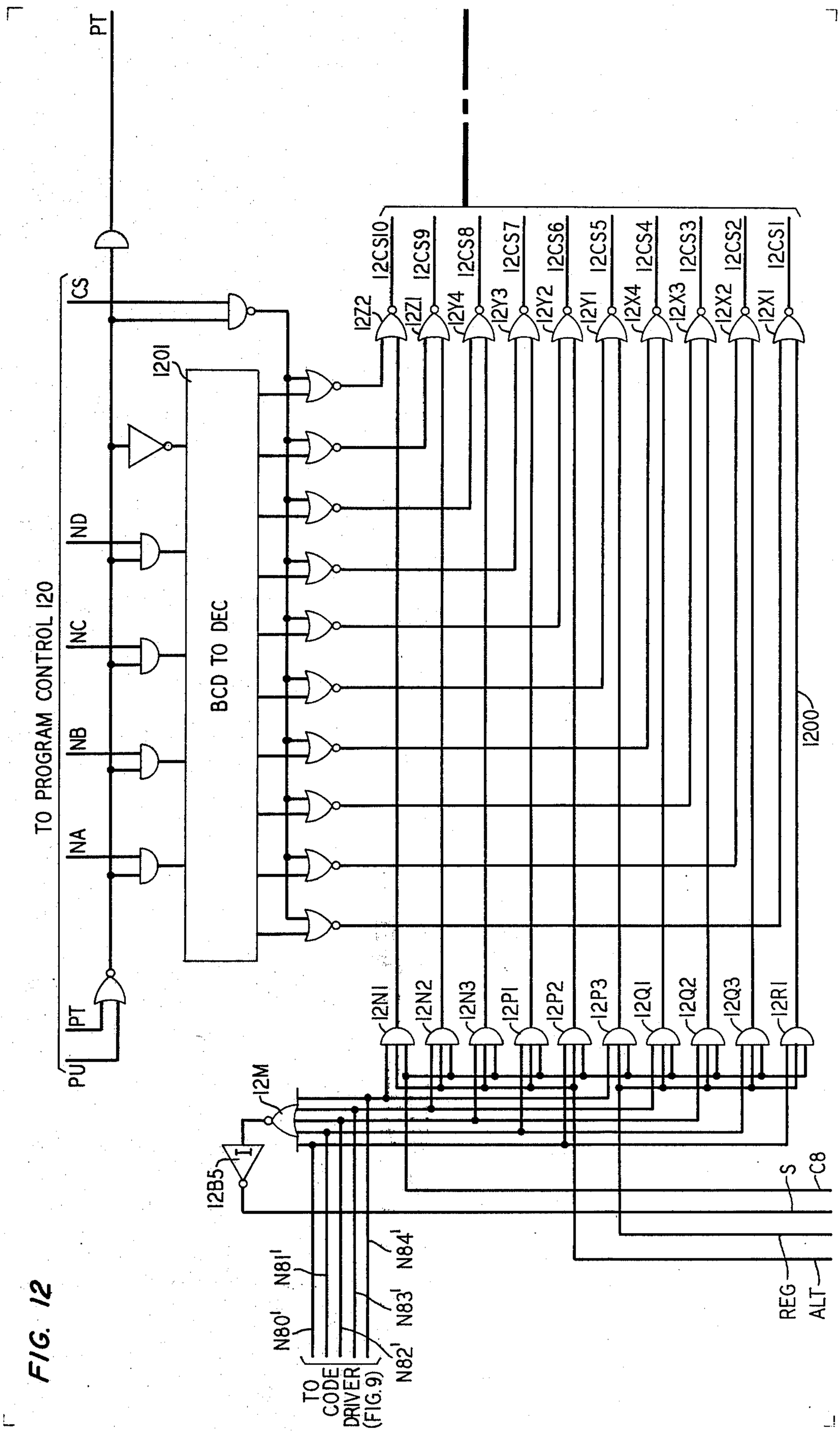
PT
TO PROGRAM CONTROL 120
CS
ND
NC
NB
NA
PT
PU
1201
BCD TO DEC
12CS10
12CS9
12CS8
12CS7
12CS6
12CS5
12CS4
12CS3
12CS2
12CS1
12Z2
12Z1
12Y4
12Y3
12Y2
12Y1
12X4
12X3
12X2
12X1
1200
12N1
12N2
12N3
12P1
12P2
12P3
12Q1
12Q2
12Q3
12R1
12M
12B5
S
C8
REG
ALT
N80'
N81'
N82'
N83'
N84'
TO CODE DRIVER (FIG. 9)

FIG. 12

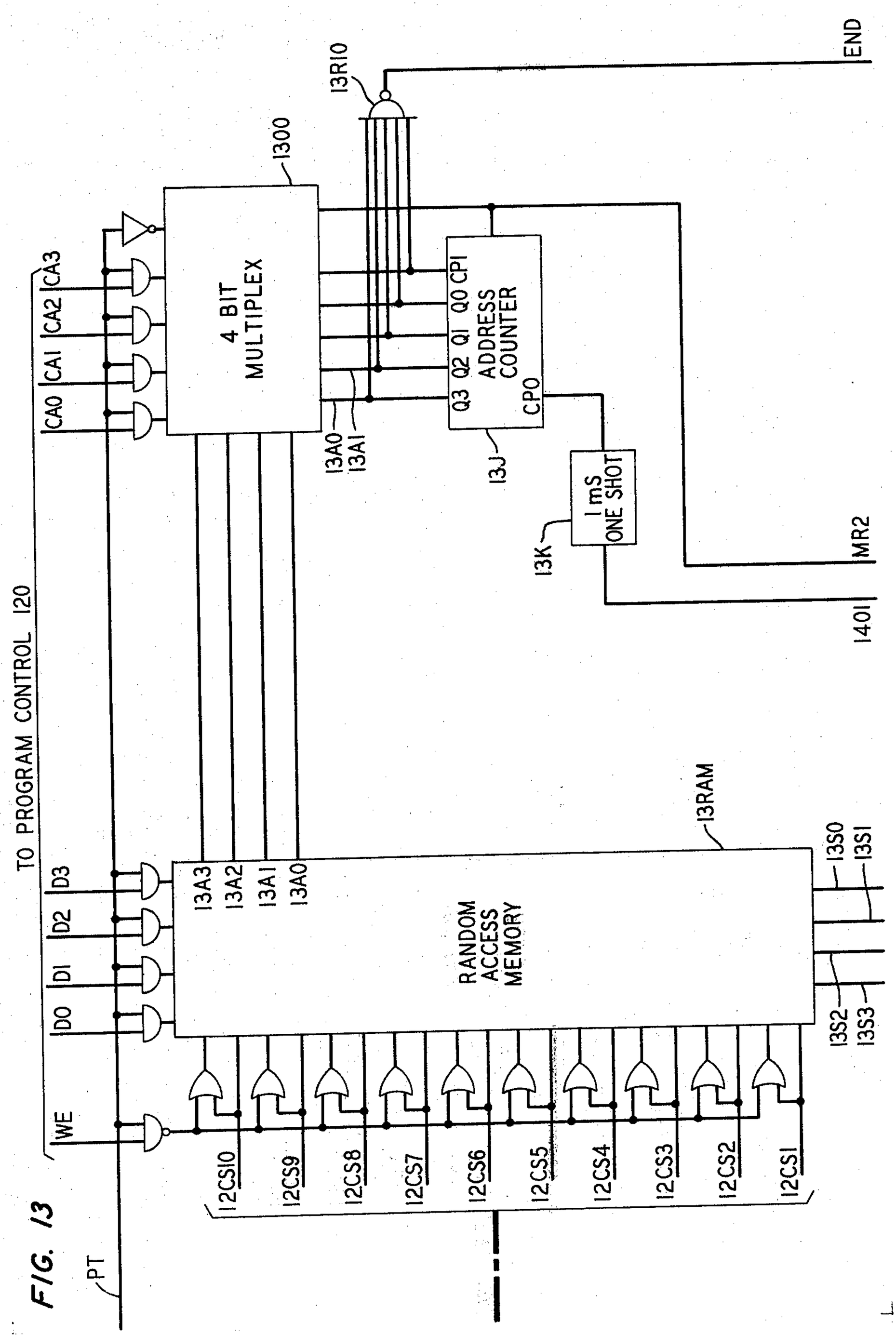
TO PROGRAM CONTROL 120
CA0
CA1
CA2
CA3
4 BIT MULTIPLEX
1300
13R10
END
Q3 Q2 Q1 Q0 CP1
ADDRESS COUNTER
CP0
13J
13A0
13A1
1 mS ONE SHOT
13K
MR2
1401
D0
D1
D2
D3
WE
PT
13A3
13A2
13A1
13A0
RANDOM ACCESS MEMORY
13RAM
13S0
13S1
13S2
13S3
12CS10
12CS9
12CS8
12CS7
12CS6
12CS5
12CS4
12CS3
12CS2
12CS1

FIG. 13

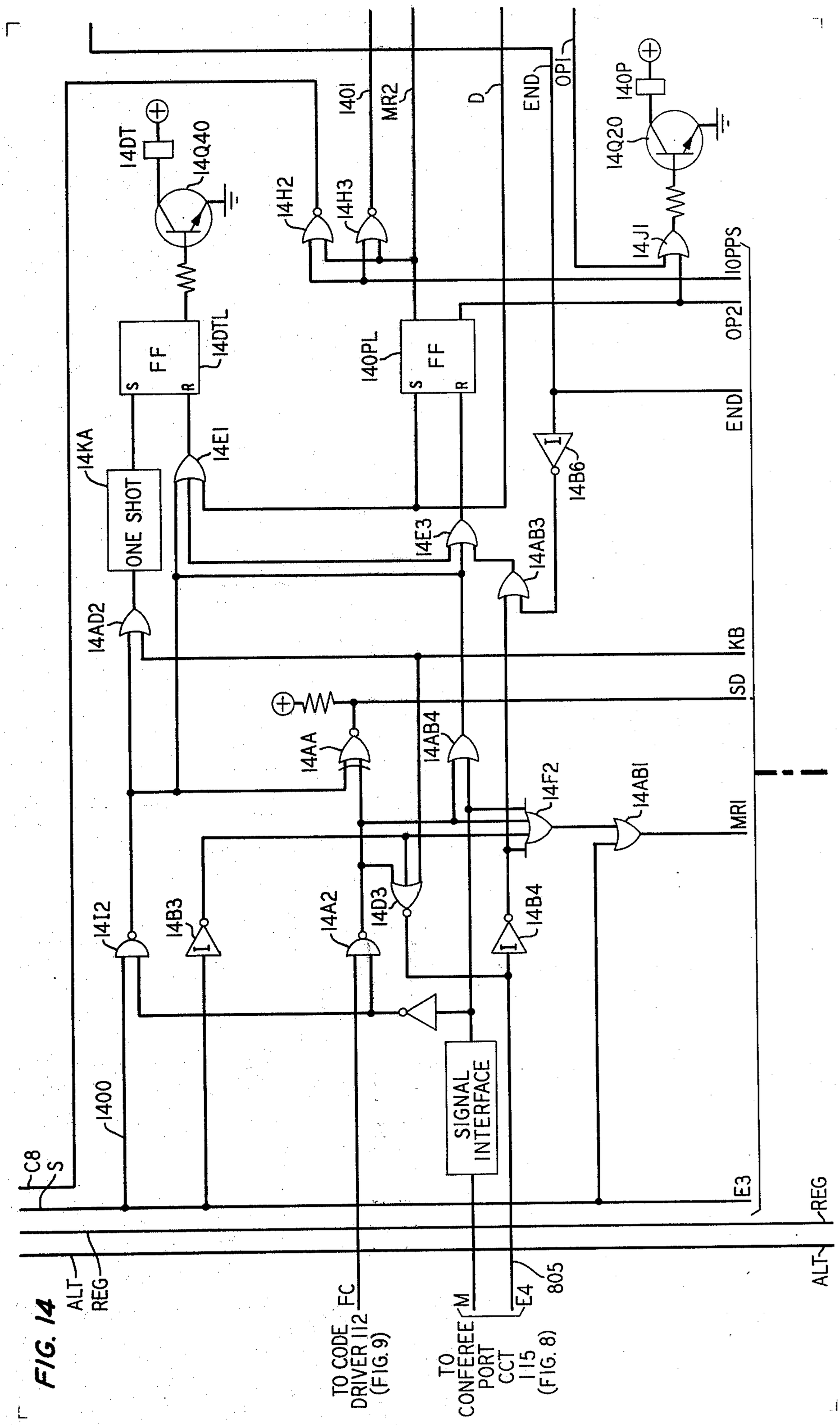
14DT
14Q40
14H2
14H3
1401
MR2
D
END
OPI
140P
14Q20
14J1
10PPS
OP2
END
FF
S
R
14DTL
140PL
FF
S
R
14KA
ONE SHOT
14EI
14E3
14AB3
14B6
I
14AD2
KB
SD
14AA
14AB4
14F2
14ABI
MRI
14I2
14B3
14A2
14D3
14B4
SIGNAL INTERFACE
1400
C8
S
E3
REG
ALT
ALT
REG
FC
TO CODE DRIVER 112 (FIG. 9)
M
E4
805
TO CONFEREE PORT CCT 115 (FIG. 8)

FIG. 14

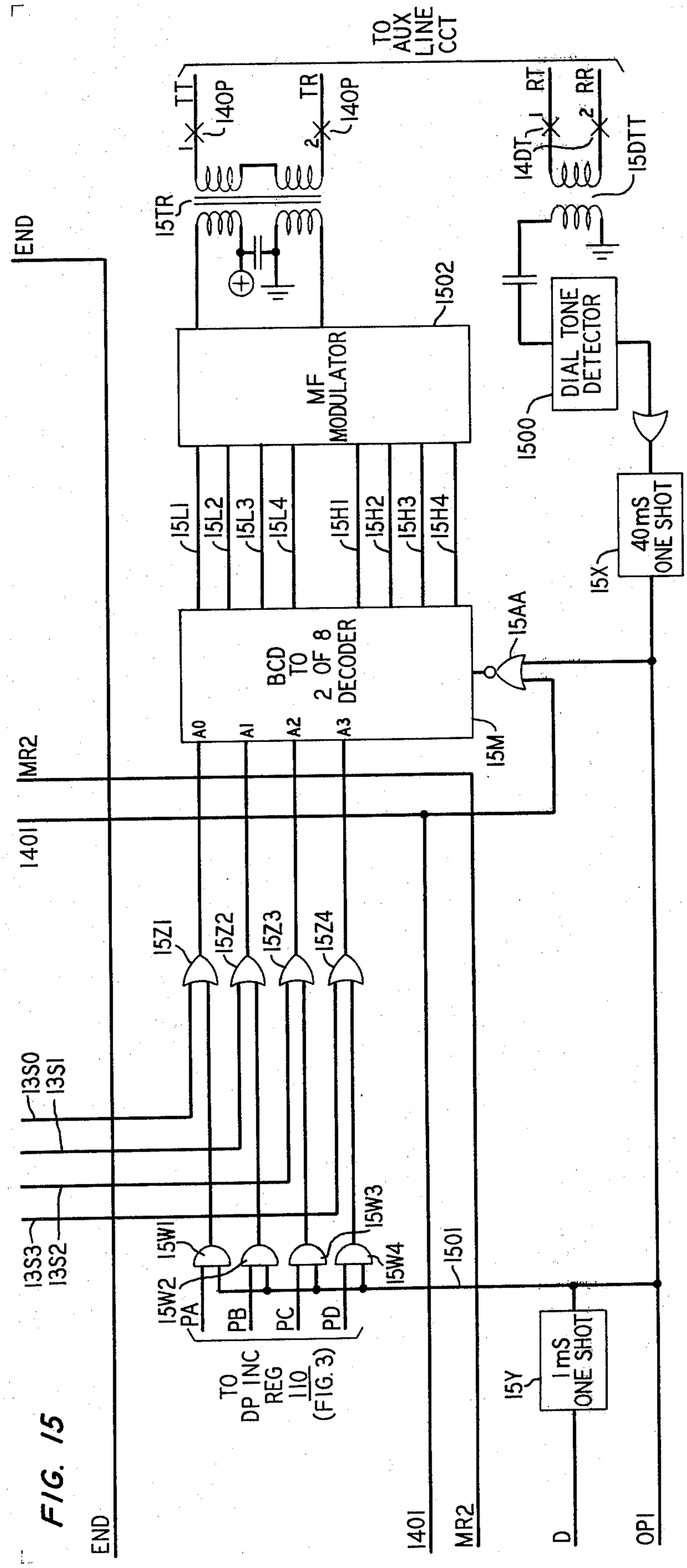
TO AUX LINE CCT
TT
140P
TR
140P
RT
RR
14DT
15DTT
15TR
END
1502
MF MODULATOR
DIAL TONE DETECTOR
1500
15L1
15L2
15L3
15L4
15H1
15H2
15H3
15H4
40mS ONE SHOT
15X
15AA
BCD TO 2 OF 8 DECODER
A0
A1
A2
A3
15M
MR2
1401
15Z1
15Z2
15Z3
15Z4
13S0
13S1
13S3
13S2
15W1
15W2
15W3
15W4
PA
PB
PC
PD
TO DP INC REG 110 (FIG. 3)
1501
15Y
1mS ONE SHOT
END
1401
MR2
D
OP1

FIG. 15

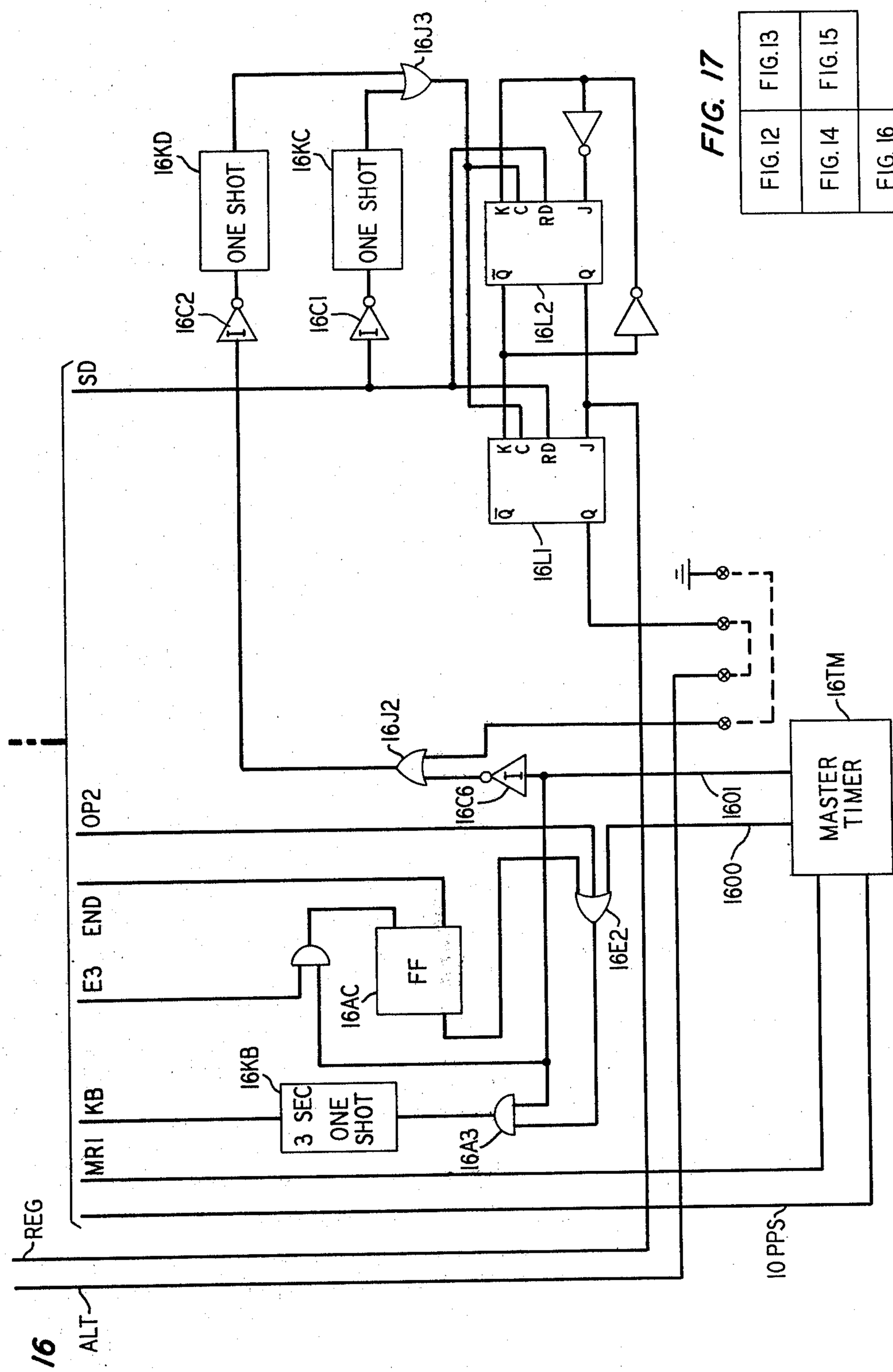

FIG. 16

FIG. 17

FIG. 12	FIG. 13	
FIG. 14	FIG. 15	
FIG. 16		

CONFERENCE ARRANGEMENT

FIELD OF THE INVENTION

In a communication system, conference arrangements are provided to permit groups of customers to converse with each other. These conference arrangements can be classified in two general categories frequently designated "meet-me" and "group call." The term "meet-me" refers to conference arrangements wherein at a predetermined time all conferees rendezvous by calling a designated converence number. The term "group call," however, refers to a conference arrangement such as the one disclosed herein whereby one party, called the conference originator, initiates action to summon all other conferees.

BACKGROUND OF THE INVENTION

While many conference arrangements have been proposed in the prior art these arrangements lack certain features which have been incorporated in a proposed arrangement.

In one typical conference arrangement used in a telephone system, the conference originator dials a telephone number assigned to a multiport transmission bridge circuit. Each port of the conference bridge is associated with a line circuit of the telephone system and when the originator is connected to the bridge one of the line circuits is seized through its corresponding port. Dial tone is returned to the originator and the originator dials the telephone number of one of the conferees. As each conferee answeres another line is automatically seized for the conference originator to permit the dialing of the next conferee. While these arrangements permit the conference originator to connect any conferee to the conference, the conference originator has no direct control over the individual port itself.

It is therefore one object of our invention to provide a conference arrangement wherein the conference originator can exercise control over selectable port circuits.

With other prior art conference arrangements the conference circuit will automatically summon a group of conferees as soon as the conference circuit is seized by the conference originator. These conference arrangements are sometimes programmed so that different groups of conferees are selected depending on the number dialed by the conference originator. Some of the conference circuits are also arranged to automatically dial the number associated with a similar conference circuit so that many secondary conference circuits can be added to the original primary conference circuit to form a larger conference circuit. While these conference arrangements automatically establish connections and relieve the conference originator of the burden of dialing the individual conferees, the conference circuits do not permit the conference originator to exercise control over the program and over secondary conference bridges which are added to the primary bridge.

Accordingly, it is another object of our invention to provide a preprogrammed conference circuit wherein the conference originator can exercise selective control over the program.

A further object of our invention is to provide a conference arrangement wherein the conference originator can select a port of a primary bridge to extend a connection to a similar bridge and thereafter exercise the same control over the secondary bridge as if the conference originator were connected directly to the secondary bridge.

SUMMARY OF THE INVENTION

These and other objects are attained in the one illustrative embodiment of the invention wherein a conference arrangement comprises a transmission bridge having an originator's port circuit and a plurality of conferee port circuits. Associated with the originating port circuit are facilities responsive to signals from the originator to control the originating port circuit and the conferee port circuits. Furthermore, each conferee port circuit has associated therewith automatic dialing apparatus for initiating calls to designated conferees in accordance with prearranged programs.

More specifically, in the one illustrative embodiment disclosed herein the originating port circuit is equipped with a multifrequency receiver circuit and decoder circuitry. The multifrequency receiver is responsive to tone signals transmitted from the conference originator and these tones are translated by the decoder into signals for controlling the various modes of operation of the conference arrangement, prior to and during an established conference. Thus, for example, the originator is able to select any conferee port and cause that conferee to be disconnected from the conference bridge and connected privately to the originator over a separate ad-lib communication bus. Also, the originator can cause a conference arrangement to assume a broadcase mode so that the originator can converse with the conferees but the conferres cannot converse with each other. Further, the originator has the capability of inserting different dialing patterns into the automatic dialing apparatus so that different groups of conferees may be summoned to the conference or the conference originator can seize a conferee port and dial a conferee directly.

DESCRIPTION OF THE DRAWING

A better understanding of these and other features of the arrangement contemplated will be had with the following description made with respect to the drawing in which FIG. **1** is a block diagram of a conference arrangement;

FIGS. **2–10,** when arranged in accordance with FIG. **11,** show a more detailed schematic representation of a portion of the conference arrangement; and

FIGS. **12–16,** when arranged in accordance with FIG. **17,** show a more detailed schematic representation of the automatic dialing apparatus associated with one conferee port.

Whenever possible the apparatus has been given a combined number and letter reference designation. The number preceding the letter designation indicates the Figure of the drawing in which the apparatus appears. In the case of certain apparatus such as relays, the contacts are given the same reference designation as a winding followed by the contact number.

BRIEF DESCRIPTION OF THE ARRANGEMENT

The overall conference system is disclosed in block diagram form in FIG. **1.** The conference circuitry is connected to the customers it serves via a telephone switching center **104** which can be any one of the many types of switching systems found in the prior art. To

provide suitable high quality transmission the various subassemblies of the system are interconnected over four-wire transmission paths and the well-known E and M lead signaling system is used throughout.

The conference circuitry interfaces the switching center serving the customers by auxiliary line and trunk circuits. More specifically, the access to the conference circuit by the customer originating a conference call is via auxiliary trunk circuit **103.** Auxiliary trunk circuit **103** appears like an outgoing trunk at the telephone switching center **104.** The conferees, on the other hand, are connected to the conference via auxiliary line circuits such as **105** and **136.** These auxiliary line circuits appear as customer lines at the switching center and calls are extended from the auxiliary line circuits to the customer stations or to other conference circuits in the same manner as calls are extended from conventional customer line circuits.

Conversation between the conference originator and the conferees is via a four-wire multiport transmission bridge **106** and an ad-lib bus **107.** The conference originator is connected via originating port circuit **114** to the bridge while the conferees are connected to the bridge via conferee port circuits such as **115** and **116.**

Associated with the originator's port circuit is a dial pulse incoming register **110,** multifrequency receiver **108** and decoder **109.** Register **110** receives digits from switching center **104** during the establishment of a conference call. These digits are used to establish the level of precedence for the conference call in addition to controlling the selection of different dialing patterns which determine the identities of the conferees that are to be automatically summoned for a particular conference.

The multifrequency receiver **108** and decoder **109** respond to multifrequency signals transmitted from the conference originators station to control the various modes of operation of the conference circuit as described below. Connected to the decoder are three code driver circuits **111, 112** and **113.** Driver **111** responds to two-digit codes **70 – 79** from the decoder to control the originator's port circuit **114,** while driver **112** responds to the codes **80 – 89** to control the dialing patterns of the automatic dialers **117** and **118** which are associated with the conferee port circuits **115** and **116** respectively. Driver **113** responds to the codes **00-59** to control each of the conferee port circuits.

Associated with each conferee port circuit is an automatic dialer. The automatic dialer such as **117** comprises a memory containing the telephone numbers of the conferees and control circuitry for initiating calls over the telephone network via auxiliary line circuit **105.**

To originate a conference all the customer dials the desired precedence level, the telephone number assigned to the particular conference bridge and the conference dialing pattern. In the system being described each call is assigned a level of priority or precedence by the calling customer and the calls having a higher priority take precedence over lower priority calls, that is, the higher priority calls can commandeer equipment which is busy serving lower priority calls. As soon as the switching machine associated with the conference arrangement receives a call from the conference originator, the originator's port circuit **114** will be seized and the precedence digit and the last digit of the telephone number assigned to the conference circuit will be transmitted in the form of dial pulses from the switching center to dial pulse incoming register **110.** Incoming register **110** converts the signals to binary code and forwards the binary coded information to the automatic dialers **117** and **118.** The precedence digit will be converted to multifrequency signals to be outpulsed by the automatic dialers while the last digit which represents the dialing pattern number will select the conferee to be called by a particular dialer.

As mentioned above, each automatic dialer has a memory which contains a list of conferees that can be summoned upon the receipt of various dialing pattern numbers from the conference originator. Thus, for each dialing pattern number a group of conferees are connected together over the conference circuit by having the automatic dialer associated with each conferee port circuit dial one of the conferees on its list.

The conference arrangement can also operate in a primary or secondary mode. This mode is established by the pattern number digit. The primary mode of operation refers to a conference arrangement that the originator dials directly into while the secondary mode of operation refers to a conference arrangement which has been activated by another conference arrangement which is operating in its primary mode.

When dial pulse incoming register **110** receives its two digits from the switching center it cuts through the originator's voice path to the bridge and a tone from tone supply **126** is returned to the originator indicating to the customer at the originating station that he has been connected to the conference bridge.

When the dialing pattern information has been stored in the automatic dialer **117,** the automatic dialer will be activated to originate a call to a selected conferee by seizing auxiliary line circuit **105** and initiating a request for service at telephone switching center **104.** Upon receiving dial tone automatic dialer **117** outpulses the precedence digit followed by the called conferee's telephone number as determined by the dialing pattern. If the called conferee's telephone line is busy or the conferee does not answer within a predetermined time interval the automatic dialer assumes that the called party cannot be reached at that telephone number and initiates a call to an alternate number that has been programmed into the dialer. The dialer will automatically keep trying the regular and alternate telephone numbers of the conferees until the conferee answers or until the originator transmits a control signal to stop the automatic dialer. When a conferee answers, the automatic dialer associated with that conferee port circuit will be released and the conferees voice path will be cut through to the four-wire transmission bridge **106.**

When the conference is established an alerting tone is applied to the bridge via originator's port circuit **114** from tone supply **126.** This informs each dialed conferee that a conference is being established. The circuitry can also be arranged to put the tone under control of the originator so the originator can apply and restore the tones by the dialing of special codes.

The conference arrangement also permits the originator to hold private conversations with individual conferees during a conference call. All other conferees will still be connected to the bridge but will not be able to hear the conversation between the originator and the individual conferee. However, the conferees that remain connected to the bridge will be able to converse with each other during this private conversation.

To initiate this action the conference originator keys in a control character plus a two digit character between **01** and **59** designating a particular port with which the private conversation is to be held. As described below a control character precedes every command code to select the primary or secondary bridge over which the command is to be executed. The multifrequency tones transmitted by the originator are received by MF receiver **108** and converted to binary code for transmittal to decoder **109.** Depending on the two-digit code keyed in, driver **113** activates the conference port circuits to disconnect conference originator and the conferee port circuit from the bridge and interconnect both parties via ad-lib bus **107.**

If there is a conferee connected to a selected port circuit the originator can converse with him over the ad-lib bus. The originator can also key in a control character and the code **73** to cause a conferee to be disconnected from the port. After the conferee has been disconnected, the originator can cause the selected conferee port circuit to initiate a service request at switching center **104.** When auxiliary line circuit **105** receives dial tone from the switching center the conference originator can begin dialing the telephone number of a new conferee. The conference originator can use a similar procedure and summon each of the conferees individually by keying in a control character and the code **85** to stop the action of the automatic dialers, thereby permitting the conference originator to dial a conferee for each port circuit.

If the conference originator has selected a conferee for connection to the ad-lib bus the conference originator can return the conferee and himself to the bridge by keying in a control character and the code **00.**

The originator may also select a broadcast mode of operation by dialing a control character and the code **72.** This mode of operation permits the originator to be heard by all conferees but prevents them from talking back through the four-wire transmission bridge.

When the originator decides to end the conference he need only to go on-hook and the switching system will cause auxiliary line circuit **103** to signal over its M lead to the conference circuit causing a disconnect. At this time the conference circuitry will be reset and all conferee ports will be released.

DETAILED DESCRIPTION

Turning now to FIGS. **2–10,** arranged according to FIG. **11,** a more detailed description of the conference arrangement will now be given. The originator's port circuit **114** is shown in more detail in FIG. **4** and this is connected via an auxiliary trunk circuit to the switching center as shown in FIG. **1.** Associated with the originating port circuit **114** are incoming dial pulse register circuit **110,** which is shown in FIGS. **2** and **3,** multifrequency receiver **108,** which is shown in FIG. **6,** and tone supply **126,** shown in FIG. **5.**

The output of multifrequency receiver **108,** as decoded by decoder **109** in FIG. **7** enables three drives whose outputs control the various modes of operation of a system. Driver **111,** which responds to codes **70-79** is shown in FIG. **5,** while driver **112** responds to codes **80-89** is shown in FIG. **9.** Driver **113** is shown in FIG. **10** and this driver responds to the codes **00-59.**

A typical conferee port circuit is shown in FIG. **8** and this is connected to the telephone switching center via an auxiliary line circuit, as shown in the block diagram of FIG. **1.** Associated with the conferee port circuit is an automatic dialer **117** depicted in block diagram form in FIG. **6.** Also shown in FIG. **6,** is the four-wire transmission bridge **106** and a program control **120.** Program control **120** is used by the maintenance personnel to test the automatic dialers and to establish the various dialing patterns in the memories associated with each dialer.

To illustrate the operation of the arrangement let it be assumed that a conference originator has dialed a telephone number associated with the conference shown in FIGS. **2–10.** As mentioned above, the conference originator dials a precedence digit plus the telephone number and the last digit of the telephone number includes the dialing pattern to be established by the automatic dialers in summoning the conferees. If the dialing pattern number is a digit from **1** through **5,** the conference arrangement will function in its primary mode, that is, it will be controlled as a first conference arrangement and the conference originator will dial directly into it. The dialing pattern numbers **6–9** and **0** are outpulsed from a conference operating in its primary mode and cause the conference arrangement receiving these numbers to function in its secondary mode.

When the switching center seizes the auxiliary trunk circuit associated with the originating port circuit, negative battery is applied to M lead **200** to initially activate signal interface circuit **201** associated with the dial pulse incoming register **110** and later this signal activates signal interface circuit **400** associated with the orginator's port circuit **114.** These interface circuits are used to make the signaling of the auxiliary trunk circuit compatible with the electronic circuitry of the conference circuit and among other things, prevent the false operation of the conference circuit due to hits and noise on the line.

Dial Pulse Incoming Register (FIGS. **2** and **3**)

Dial pulse incoming register **110** will count and store two digits received from the switching center. The first digits will be stored in the four bit latch **3G** and the second digit will be stored in latch **3L.** After the second digit is received the originator's transmit and receive paths are cut through to the conference originator's circuit. The digits are counted by the circuitry in FIG. **2** while the circuitry in FIG. **3** stores the digits and causes a cut-through of the originator's voice and signaling paths.

As mentioned above, the seizure signal on the M lead from the auxiliary trunk circuit activates signal interface **201** and the output of the signal interface **201** is transmitted over conductor **202** to three pulse delay circuits **203, 204** and **205.** Circuits **203** and **204** provide the holdover timing during the interpulse intervals of each received digit. At the end of each incoming pulse, the outputs of inverters **2B2** and **2B3** remain high for the duration of the respective time intervals of pulse delay circuits **203** and **204.** Since there is a **20** millisecond difference between the timing intervals of circuits **203** and **204.** EXCLUSIVE OR gate **2M** will only provide a logic high when one and only one output of the inverters **2B2** and **2B3** is a logic high.

When gate **2M** is enabled, a high will be transmitted to one input of each of AND gates **2E3** and **2E4.** The other input of AND gates **2E3** and **2E4** depends on the output of three-bit digit counter **2F** that is arranged to

operate in a three-bit mode (**00, 10, 01**) to steer the incoming digits to the proper latches.

At the end of the first digit there will be at least one logical high on the outputs of binary pulse counter **2G**. This will be transmitted to the transfer gates **2K1-2K4** and **2L1-2L4** and to OR gate **2J**. The output of OR gate **2J** is transmitted to 10 millisecond delay **206** and as the output is present more than 10 milliseconds the signal will advance digit counter **2F** to the next count. The first digit will advance the digit counter to its **10** count mode to enable gate **2E4** thus steering the output of the pulse counter **2G** through transfer gates **2K1-2K4** to decoder **3A**. Upon the receipt of the second digit, digit counter **2F** will be in its **01** mode to enable gate **2E3** and transfer gates **2L1-2L4** thus transferring the second digit to four-bit latch **3L**.

The output of inverter **2B2** is also coupled over conductor **207** to pulse counter **2G** at the end of the 65 millisecond timing interval of delay circuit **203**. This resets counter **2G** to zero for receiving the next train pulse.

Pulse delay **205** is mainly a guard timer to isolate the circuit from hits on the line that are less than 170 milliseconds in length. As soon as circuit **205** is activated, a signal is transmitted over conductor **208** to trigger one shot **2H** for 80 milliseconds and at the end of that interval one shot **2HA** is triggered for an additional 80 milliseconds to provide an output on conductor MR which partially enables AND gate **3E3**. The other output of one shot **2H** combines with the output of inverter **2B4** to enable AND gate **2E2** thereby transmitting a logical low signal over conductor PR to partially enable AND gates **3E14** and **3E24**. When delay circuit **205** was activated it transmitted a logical high signal to one input of each of AND gates **2E1** and **2E2**. As the dial pulses are received from the switching system a high will be received on conductor **210** to enable AND gate **2E1** and delay circuit **211** which triggers pulse counter **2G**. Delay **211** prevents the counting of high speed pulses and counter **2G** converts the decimal count to binary-coded-decimal. As mentioned above, the output of the counter is transmitted through transfer gates to decoder **3A** or latch **3L** depending upon the count in digit counter **2F**. The first or precedence digit is received by decoder **3A** in one form of binary-coded-decimal and transformed into another binary-coded-decimal format for transmission to four-bit latch **3G**. The second digit or dialing pattern number is transmitted in binary-coded-decimal format to latch **3L** and converted by decoder **3M** for use by the automatic dialers as described below.

NOR gate **3D** is enabled by at least one high on the output of decoder **3A** to enable AND gate **3E14** in conjunction with the signal on conductor PR as described above. This triggers one shot **3F** to enable latch **3G** to store the precedence digit. Latch **3L** is triggered in a similar manner by one shot **3K** to store the dialing pattern digit.

Decoder **3M** converts the binary-coded-decimal to decimal format. Since the pattern select digit also controls whether the conference circuit is working in a primary or secondary mode of operation the **80** pattern may either be selected by the digits **1** or **6**, pattern **81** may be selected by the numbers **2** or **7**, etc., NAND gates **3P1-3P5** combine these outputs into a single output on conductors **R80-R84**. The outputs **6–10** of decoder **3M** are monitored by NAND gate **3N** and a low signal on any one of these leads enables NAND gate **3N** indicating that the conference is operating in its secondary mode.

Another four-bit NOR gate **3J2** monitors the output of latch **3L** to detect when the second digit has been stored. The low output of gate **3J2** on conductor **300** turns off AND gate **3E3** to trigger one shot **3S** and enable latch **3R**.

At the same time, the logical low signal on conductor **300** is inverted by inverter **3H** and transmitted to the **00, 01,** and **02** inputs of the latch thereby enabling latch **3R**.

Each output of the latch **3R** is transmitted to AND gates **3S1-3S4**. The other input to these AND gates is derived over conductor CT which was activated when the originator seized the conference arrangement. Gates **3S1-3S3** enable transistors **3Q1-3Q3** to operate cut-through relays **3RCV, 3TMT** and **3SIG**.

When the cut-through relays operate in FIG. 3 they cause their contacts in FIG. 2 to connect the auxiliary trunk circuit associated with the conference originator to the originating port circuit in FIG. 4.

Gate **3S4** will be enabled as one of the dialing pattern numbers is **6, 7, 8, 9** or **0** indicating that the conference is in its secondary mode of operation.

Originator's Port Circuit (FIG. 4)

When the cut-through relays are operated as described above, a four-wire transmission path and E and M signaling leads were extended from the auxiliary trunk circuit at the switching center to the originating port circuit **114**. The seizure signal on M lead **200** is extended over conductor **404** to activate signal interface **400** associated with originators port circuit **114**.

The conference originator is connected to this port circuit via the aforementioned cut-through relay **3RCV** and **3TMT** over conductors OTT, OTR, ORT and ORR. The receive side of the line (ORT and ORR) is coupled via amplifier **4A1** over conductors OT1 and OR1 to multifrequency receiver **108** in FIG. **6**, while the transmit side (OTT and OTR) is connected via transformer **4TR1** and contacts of relay **4T** to answer tone supply **405**.

When the originator's port circuit is seized the output of signal interface **400** is a logic high which is transmitted over conductor **401**, through gate **4D3**, diode **4D1** and resistor **4R6** to the emitter of transistor **4Q4**. Transistor **4Q4** conducts causing transistor **4Q5** to conduct and transistor **4Q5** transmits ground over E lead **402** to the auxiliary trunk circuit at the switching center. This signal on E lead **402** is interpreted as an answer supervision signal to the switching center.

The output of signal interface **400** is also inverted by gate **4A3** to the input of line drivers **4C1** and **4C2** and the output of these drivers is used to control the conferees port circuit in FIG. **8** and the decoder driver in FIG. **9** which in turn controls the other functions of the conference arrangement.

The output of signal interface **400** on conductor **401** also triggers one shot **4MV1** to provide a one second high on the input of OR gate **4D2**. OR gate **4D2** is enabled to trigger answer tone timer **403** which operates relay **4T** for one second. At its contacts **4T-1** and **4T-2**, relay **4T** connects a 700 Hertz answer tone supply **405** to the originator's transmit path to inform the originator that he is connected to the conference arrangement.

Under normal operation, the conference originator is connected to the four-wire transmission bridge **106** in FIG. **6.** More specifically, transistor **4Q6** is connected to the normally low side of ad-lib latch **406** and transistor **4Q6** is turned on to hold relay **4TR** operated. At its contacts **4TR1-4TR4,** relay **4TR** connects the transmit and receive paths from the originator through transformers **4TR2** via conductors ORT', ORR', OTT' and OTR' to transmission bridge **106.** This permits a two-way conference between the originator and all conferees that are subsequently to be connected to the other ports of the bridge.

The precedence digit and the dialing pattern number stored in the dial pulse incoming register **110** as described above, are forwarded to the automatic dialers associated with each conferee port. The automatic dialers then seize their respective auxiliary line circuits at the switching center, and upon the receipt of dial tone, each dialer dials the number of the wanted conferee.

When the conference originator wishes to converse privately with one of the conferees he dials a control character to select the proper conference arrangement plus the two-digit address code of the conferee with whom he wished to talk privately. This causes the conference originator to disconnect himself from transmission bridge **106** by setting ad-lib latch **406** which releases relay **4TR** and the selected conferee is also connected to the ad-lib bus.

While the originator is connected to a conferee port via the ad-lib bus he has a choice of three different actions. First, he can dial a control character plus the code **00** to return himself and the conferees to the conference bridge. If the originator dials a control character plus the code **73** the conferee will be released and dial tones will be heard by the originator. Then the originator can manually dial the telephone number associated with a new conferee. Should the originator dial the code **75** the conferee will be released from the port but the port circuit will not initiate a new request for dial tone.

The redial logic in the originator's port circuit consists of one shot **409** which is triggered by a signal over conductor NN**73.** This signal is generated in code driver **111** when the originator dials the code **73.** One shot **409** transmits a one microsecond pulse over conductor RD to signal a momentary disconnect to the conferee port circuit.

When the originator dials the code **75** a momentary signal is received from code driver **111** in FIG. **5** over conductor NN**75** to set release latch **413,** causing line driver **4A2** to go high and transmit a signal over release latch conductor RL to the conferee port circuit as described below.

The originator port circuitry also includes logic circuitry whereby the conference originator can put the conference circuit in a broadcast mode of operation. In this mode the originator can talk to the conferees but the conferees cannot talk to each other. The originator establishes this mode of operation by dialing a control character and the two-digit code **72** which puts a logic high from code driver **111** on conductor NN**72** to set broadcast latch **408.** Latch **408** transmits a logic high to the input of NOR gate **4CA** which transmits a low to the input of line driver **4D1.** The output of line driver **4D1** is a logical high on conductor BC which is transmitted to the conferee port circuits to establish the broadcast mode.

Conferee Port Circuit (FIG. 8)

The conferee port circuit **115,** shown in FIG. **8,** provides the voice paths and switching functions necessary to connect the conferee to transmission bridge **106** or to ad-lib bus **107.** As mentioned above, the conference originator dials a control character plus the two-digit address code of a conferee to transfer that conferee from the transmission bridge **106** onto ad-lib bus **107.** The two-digit address code of the conferee port **115** is the code **01** and when the originator dials this code a logical high from code driver **113** in FIG. **10** appears on conductor NN**01** to set ad-lib latch **801.** With latch **801** set, transistor **8Q8** turns on to operate relay **8TR** and relay **8TR** completes a four-wire path between the conferee and ad-lib bus **107.**

Ad-lib latch **801** is reset by a logical high received from the originator's port circuit on reset conductor RS. This occurs whenever the originator dials a control character plus the first digit of a two-digit code as recognized by the code driver **111** in FIG. **5.** Also shown in FIG. **8** are two relays **8BT** and **8BT1.** When relay **88T** is operated the conferee port circuit will be in a receive-only or broadcast mode of operation. When both relays **8BT** and **8BT1** are operated, the conferee is completely disconnected from transmission bridge **106** and can only talk over ad-lib bus **107.**

When the originator dials a control character and the two-digit code **72** to establish a broadcast conference, a logical high will appear on conductor BC. This high is inverted by gate **8D1** causing one input of NAND gate **8C1** to go high which turns off transistor **8Q9.** In turning off, transistor **8Q9** releases relay **8BT.** Relay **8BT** is normally held operated by the logical high from gate **8D1** and a logical high from AND gate **8C4.** Gate **8C4** is enabled from the normal high input of latch **801** and signal interface **802** which monitors the supervision on M lead **803** from the switching center.

Supervision to the switching center is sent over E lead **804** and this supervision is controlled from two sources in the conferee port circuit. If either input to OR gate **8F2** goes high, transistor **8Q11** will conduct, causing transistor **8Q12** to apply a ground to E lead **804.** OR gate **8F2** is enabled by a signal over E lead **805** from automatic dialer **117** or if the conference circuit is manually operated. The originator can operate the conference manually by releasing a conferee from a particular port and redialing the telephone number of a new conferee over that port or the originator can transfer the conferee to ad-lib bus **107.**

If the originator wanted to add a conferee to the conference, he would dial a control character plus the two-digit code of the conferee port to which the conferee is to be added. When the code **01** is dialed this sets ad-lib latch **801** transferring the conferee port **115** from transmission bridge **106** to ad-lib bus **107.** The setting of latch **801** puts a logical low on the input of gate **8D3** which inverts the signal to place a high on the inputs or OR gate **8E1** which, in turn, puts a high on AND gate **8C3.** Since the originator is still connected to the originator's port the originator is still connected to the originator's port circuit, a logical high is being received over conductor **807** to the input of AND gate **8B2.** The other input of gate **8B2** is normally high until a redial order has been dialed by the originator. Gate **8B2** is therefore enabled, placing a high on one input of gate **8B3,** the other input of gate **8B3** being normally high

until a release order has been dialed by the originator. Gate **8C3** is enabled to provide a high output thereby enabling OR gate **8F2.**

When a redial code is dialed by the originator a **1** second pulse will cause NAND gate **8D2** to go low thereby causing AND gate **8B2** to have a low output. This will, in turn, momentarily remove ground from E lead **804** and release the switching center connection to the conferee. Reapplication to ground to E lead **804** will reseize the auxiliary line circuit at the switching center returning dial tone to the conference originator. The conference originator can now dial the telephone number of a new conferee. If the originator dials the release code **75** a high signal is transmitted on release lead RL to enable AND gate **8B1.** The output of gate **8B1** is inverted to make AND gate **8B3** have a low output and to remove the ground from lead **804.** This is recognized as a steady disconnect signal at the switching center.

It will be recalled that when the originator was connected to the conference circuit, a **700** Hertz answer tone was returned to the orginator to inform him of the connection. This tone is also returned to the originator each time a conferee enters or leaves the conference.

Signal interface **802** responds to supervision on M lead **803** in that whenever a conferee is off-hook a logical high will be transmitted on conductor **809.** This high will trigger one shot **8F2** which will enable OR gate **8E2** for 1 second. When OR gate **8E2** is enabled, a signal is transmitted over conductor NT' to the orginator's port circuit thereby triggering answer tone timer **403** and returning 700 Hertz tone to the originator. When the conferee goes on-hook a low on conductor **809** will trigger one shot **8F1** which, in turn, triggers the answer tone timer **403** in FIG. **4** to return tone to the originator.

Multifrequency Receiver and Decoder (FIGS. **5–7** and **10**)

As set forth above, the precedence and pattern number digits are automatically out-pulsed from the switching center and received by the dial pulse incoming register in FIGS. **2** and **3.** After the originator is connected to the conference arrangement the originator can exercise direct control over the conference arrangement and each of the conferee ports by dialing directly into the conference arrangement.

The term "dialing" as used herein denotes any form of code signaling arrangement provided at the customer station. In the exemplary embodiment, the signaling is in the form of two-out-of-eight multifrequency tones and the originator's station is equipped with a **12** button key set. The buttons are designated by the digits **0-9** such as on a conventional rotary dial, in addition to two control characters namely, the number sign # and the asterisk *.

The multifrequency receiver **108** associated with the conference circuit is shown in FIG. **6** and this receiver is connected to the originator's port circuit via conductors **0T1** and **OR1** and voice frequency amplifier **4A1.** A combination of two tones is transmitted each time the originator depresses a pushbutton on his key set and these tones are converted to a direct current signal on one of the low conductors **L1-L4** and a direct current signal on one of the high conductors **H1-H4.** The direct current signals are forwarded to decoder **109,** shown in FIG. **7.**

The two-out-of-eight code on the L- and H-conductors is converted to four-bit binary-coded-decimal by decoder circuit **700.** The output of decoder circuit **700** represents the digits **0-9** plus the asterisk * and the number sign # symbols which are binary-coded-decimal **11** and binary-coded-decimal **12,** respectively. The binary-coded-decimal **11** is detected by AND gate **7J1** to partially enable AND gate **7L1,** while the binary-coded-decimal **12** is detected by AND gate **7J2** to partially enable AND gate **7L2.**

The other input to AND gates **7L1** and **7L2** comes from secondary lead SEC which is a logical high when the conference arrangement is being used in its secondary mode and a logical low when the conference arrangement is being used in its primary mode. Thus, when the conference is in its primary mode the low or secondary lead SEC will disable gate **7L1** and partially enable gate **7L2** so that whenever a number # symbol has been dialed, AND gate **7L2** will be enabled thereby enabling OR gate **7M1.** If the originator should dial the asterisk * control character the conference arrangement operating in its primary mode would not recognize this control character but a similar conference arrangement connected thereto and operating in its secondary mode would respond. This arrangement permits the originator to control the primary and secondary bridges in the same manner by dialing the different control characters before dialing the code associated with the command to be executed.

When OR gate **7M1** is enabled as a result of the receipt of a control signal such as an asterisk * or a number symbol # , gate **7M1** transmits a signal over conductor **710** to clear the four-bit latches **7B1** and **7B2** and to clear counter **7DC.** The last two digits representing a command code are stored in latches **7B1** and **7B2** under control of steering circuitry including counter **7DC.** When the first digit is received by multifrequency receiver **108** in FIG. **6,** a momentary low signal is transmitted over start conductor **701,** inverted by inverter **7A1** to advance counter **7DC** which enables latch **7B1** to accept the first digit. The first digit is stored in the latch causing the latch to have at least one logical high output depending on the digit stored. THe high output is recognized by OR gate **7C1** which puts a high on lead **702** to prevent latch **7B1** from recognizing any more digits.

The second digit received by MF receiver **108** is also accompanied by a pulse on start lead **701** which advances counter **7DC** to enable latch **7B2.** The second digit is stored in latch **7B2** and the output of latch **7B2** is monitored by gate **7C2** which puts a logical high on conductor **703** when the digit is stored to prevent latch **7B2** from storing further information.

The logical highs from OR gates **7C1** and **7C2** indicate that both digits have been received and this enables AND gate **7D1** which triggers one shot **7F1** for **1** millisecond. One shot **7F1** transmits a logical high to line driver **7K1** and, driver **7K1** transmits a logical high signal over operate conductor OP to code driver **111** in FIG. **5,** to code driver **112** in FIG. **9** and to code driver **113** in FIG. **10.**

The tens of first digit of the two-digit command code is converted from binary-coded-decimal to decimal by decoder **7E1** which is manifested by a logical high signal on one of the tens (N-) output leads. These N- leads enable the respective drivers in FIGS. **5, 9,** and **10.** Thus, as any code in the series **70-79** is dialed by the

originator a high is sent over conductor N7 to FIG. 5.

The units or second digit is transmitted in binary-coded-decimal over conductors SB1-SB4 simultaneously to all code drivers. Decoder circut 5C1 in FIG. 5, will not respond to the binary-coded-decimal input representing the units digit until a logical high is inverted by inverter 5B5 as a result of the tens digit 7 being dialed and a 1 millisecond pulse on conductor OP is inverted by inverter 5B6 indicating that both digits of the command code have been received.

The output of decoder 5C1 in FIG. 5 is a one-out-of-ten indication on the NN- conductors which are numbered corresponding to the tens and units digits dialed by the originator.

Thus, as described above, the code 72 will transmit a signal over conductor NN72 to set latch 408 in FIG. 4 and put the conference in a broadcast mode. The code 73 actuates the redial one shot 409 causing the conferee port to release and request dial tone so that a new conferee can be dialed. The code 75 causes the conferee port to release the conferee without requesting dial tone.

The code driver 113, shown in FIG. 10, is part of the circuitry which decodes the command codes 00-59 and is similar to code driver 111, shown in FIG. 5. Binary-coded-decimal to decade decoder 10B1 is actuated when the tens digit 0 is dialed by the originator as indicated by a logical high on conductor NO and when a high appears on operate lead OP. When actuated, decoder 10B1 converts the units digit which appears in binary code format on conductors SB1-SB4 to an indication on the NN00-NN59 conductors. Conductor NN00 is the address code assigned to the originator's port circuit of FIG. 4, while code 01 is assigned to the conferee port shown in FIG. 8. The other leads NN02-NN59 are connected to the other conferee ports that have not been shown to simplify the drawing. As mentioned above, when a signal appears on an NN- conductor assigned to a conferee port such as conductor NN01, the adlib latch in the port is actuated to transfer the conferee port from transmission bridge 106 to adlib bus 107.

The code driver 112 shown in FIG. 9 responds to any two-digit code in the series between 80 and 89 to provide dialing pattern numbers to the automatic dialers.

When a binary-coded-decimal number appears on the units leads SB1-SB4 of decoder 109 in FIG. 7, the number will also appear on the input of binary-coded-decimal to decade decoder 9C1. Decoder 9C1 will not respond to this input until a logic high is received on tens conductor N8 from decoder 109 in FIG. 7. This high is inverted by inverter 9A1 and appears along with a low pulse of 1 millisecond duration on conductor OP. The output of decoder 9C1 transmitted to one input of OR gates 9F1-9F5.

The input to code driver 112 on units leads SB1-SB4 and conductor N8 is derived from decoder 109 in FIG. 7 in response to the originator keying in various dialing pattern numbers after the orginator has been connected to the conference arrangement.

It will be recalled from prior descriptions that the dialing pattern number along with a precedence digit can be part of the address that the conference originator dialed to gain access to the conference arrangement. This dialing pattern number received from the switching center is registered in the dial pulse incoming register of FIG. 3 and is transmitted through gates 3P1-3P5 over conductors R80-R84 to AND gates 9D1-9D5.

The other input to the 9D- AND gates comes from inverter 9E3 that is used as a buffer in load data lead LD from the originator's port in FIG. 4. A 1 second logical high signal on lead LD is generated by one shot 4MV1 which is triggered when the switching center seizes the originating port circuit by applying negative battery to the M lead 404 as described above.

The four-bit latches 9H1 and 9L1, shown in FIG. 9, are reset by a logical low on lead M2 which orginates in the orginator's port circuit. When the originator's port circuit is seized a high is transmitted over conductor M2 and conductor 900 enable latches 9H1 and 9L1. These latches store the input information received over conductors R80-R84 from dial pulse incoming register 110 or the information received via multifrequency receiver 108 and decoder 109 over conductors SB1-SB4.

As soon as the bit information is stored in latches 9H1 and 9L1, the output is transmitted through NOR gate 9M1 and inverter 9A3 back to the latches to disable latches 9H1 and 9L1 thereby preventing the latches from recognizing further information until they are reset again.

Upon reaching the conference arrangement, the originator can reset latches 9H1 and 9L1 by dialing the code 86 which cause decoder 9C1 to transmit a signal over conductors 901 and 900 to the latches. Resetting latches 9H1 and 9L1 stops the action of the automatic dialers and the originator can select any dialing pattern to restart the automatic dialer.

When the orginator dials the code 85, decoder 9C1 transmits a logical high over conductor 902 to set latch 9N. Latch 9N transmits a high to inverter 9L6 causing driver 9K2 to transmit a high to the automatic dialers over stop-dialing lead FC. This causes all automatic dialers to stop dialing. Latch 9N will be reset from conductor 900 when the orginator disconnects or dials the reset code 86.

The output of code driver 112 is transmitted over conductors N80-N84 through transfer gates 9GN80-9GN84 to the automatic dialers associated with each conferee port such as automatic dialer 117 shown in block diagram in FIG. 6. The transfer gates 9GN80-9GN84 are actuated under control of flip-flop 9H1. For example, when the orginator's port is seized the high on conductor M2 is transmitted over conductor 203 in FIG. 9, through buffer gate 9G4 to reset flip-flop 9H1 and similar flip-flops such as 9J1 associated with other conferee ports. This puts a logical high on conductors such as 204 to partially enable the transfer gates similar to gates 9GN80-9GN84 for each automatic dialer. One transfer gate for each automatic dialer is enabled depending on the dialing pattern received over conductors N80-N84.

When the orginator dials a code for a particular conferee port its corresponding NN- lead in the group NN00-NN59 will have a logical high that will be inverted by one of the inverters such as 9K1 to set a flip-flop such as 9H1 corresponding to the conferee port number that was dialed. For the remainder of the conference call all dialing action by the automatic dialer associated with that port will be stopped.

Automatic Dialer (FIGS. 12–17)

As mentioned above, each conferee port has an auto-

matic dialer associated therewith. Part of the automatic dialer associated with conferee port circuit **115** is shown in FIGS. **12–16** arranged according to FIG. **17.** The automatic dialers can be functionally divided into control circuitry and a random access memory. Each automatic dialer is independent of the other units and provides a memory for different telephone numbers each having up to 14 digits in the illustrative embodiment. Further, in the example being described, each automatic dialer will store up to ten different telephone numbers in five different dialing patterns so there is a regular and alternate telephone number for each pattern. As discussed above, the pattern selection is made by the last digit of the telephone number dialed by the originator to gain access to the conference arrangement or by a three-digit code dialed after the originator has been connected to the conference.

Since each regular number in the memory of the automatic dialer has an alternate number, the automatic dialer is arranged to try the alternate if the conferee does not respond within a prescribed interval after the regular number is dialed. The automatic dialers interface with a program control **120** shown in the block diagram of FIG. **1.** The programming of the memories of the automatic dialers is done from program control **120.** The programmer selects a conferee port and a particular random access memory of the automatic dialer associated with that port and an address in that memory by operating various keys and buttons on a console (not shown) which is part of program control **120.**

When activated by the conference circuit, the automatic dialer is triggered by a logical high on one of the conductors N80′–N84′ (see FIG. **12**) indicating that one of the dialing patterns has been selected either through the dial pulse incoming register or from the manual selection mode when the orginator keys-in a pattern number.

NOR gate **12M** senses this high on conductors N80′–N84′ causing its output to go low which is inverted by inverter **12B5** and transmitted as a logical high over conductor S to four different circuits. First, the high on conductor S is transmitted over conductor **1400** and inverted by NAND gate **14I2** to apply a low to OR gate **14AD2** thereby triggering one shot **14KA** and setting flip-flop **14DTL.** In its set condition, flip-flop **13DTL** turns on transistor **14Q40** to operate relay **14DT.**

Relay **14DT** closes its contacts **14DT-1** and **14DT-2** in FIG. **15** to couple dial tone detector **1500** through trasformer **15DTT** to the receive path which interconnects the conferee port circuit with the auxiliary line circuit at the switching center.

At the same time, the high on conductor S will be inverted by inverter **14B3** and transmitted to one of the inputs of NOR gate **14D3.** Since the other inputs of gate **14D3** are low, gate **14D3** will transmit a logical high output over E lead **805** to conferee port circuit **115** and the auxiliary line circuit at the switching center. This signal on E lead **805** causes the auxiliary line circuit to be seized at the switching center.

The high on E lead **805** is inverted by inverter **14B4** to enable OR gate **14F2** which transmits a low signal to OR gate **14AB1.** The logical low output of OR gate **14AB1** is transmitted over conductor MR1 to trigger master timer **16TM.** Master timer **16TM** puts out ten pulses per second on lead **10pps** to control the transmittal of multifrequency dialing signals over the auxiliary line circuit as described below. In addition, timer **16TM** provides the timing for dial tone on conductor **1600** and the no-answer timing on conductor **1601.** Both of these timing intervals can be altered by the rearrangement of cross-connections (not shown) within the timer as is well-known in the art.

The dial tone time-out interval in this illustrative embodiment is set at **8** seconds. Thus, after **8** seconds, timer **16TM** is triggered and a signal is transmitted over conductor **1600** to enable OR gate **16E2.** The output of OR gate **16E2** causes AND gate **16A3** to go low and trigger one shot **16KB** for **3** seconds. When triggered, one shot **16KB** transmits a high over conductor KB to return the output of NOR gate **14D3** to a logical low. When the output of gate **14D3** goes low this is interpreted by the auxiliary line circuit in the switching system as a disconnect. In other words, if after a line seizure dial tone is not returned with 8 seconds, the auxiliary line circuit will be released.

If dial tone is received over the auxiliary line circuit within a specified interval, detector 1500 will trigger one shot **15X,** and at the end of 40 milliseconds, one shot **15Y** will be triggered to transmit a logical high on conductor D. The high on conductor D will enable OR gate **14E1** to reset flip-flop **14DTL** and flip-flop **14DTL** and flip-flop **14DTL** releases relay **14DT** to remove the dial tone detector from conductors RT and RR. The output of one shot **15Y** also sets flip-flop **140PL** which causes a high to be transmitted over conductor **OP2.** This high keeps one shot **16KB** from operating, as described above, and prevents the dial tone connection from releasing during the pulsing mode.

The output of one shot **15X** is also transmitted over conductor **1501** to enable the precedence digit transfer gates **15W1-15W4** for 40 milliseconds. The other input to these gates is the precedence digit from incoming register **110.** The precedence digit in binary-coded-decimal is transferred through OR gates **15Z1-15Z4** to decoder **15M.**

The output of one shot **15X** is also inverted by NOR gate **15AA** which supplies an enable pulse to decoder **15M.** The precedence digit received from the incoming register is stored in decoder **15M** and converted to a two-out-of-eight format with a signal on one of the four **15L-** leads and a signal on one of the four **15H-** leads to multifrequency modulator **1502.** These signals cause modulator **1502** to transmit a combination of two tones to transformer **15TR.**

When one shot **15X** was triggered for 40 milliseconds a logical high was transmitted over conductor **OP1** to OR gate **14J1** to turn on transistor **14Q20** thereby operating relay **13OP.** Relay **14OP** causes its contacts **14OP-1** and **14OP-2** to complete path for transmitting the multifrequency tones representing the precedence digit to the auxiliary line circuit at the switching center.

As mentioned above, the triggering of one shot **15Y** sets flip-flop **14OPL** which puts a low signal on conductor MR2 and a high on conductor **OP2.** The logical high on conductor **OP2** prevents one shot **16KB** from triggering and maintains relay **14OP** operated.

While conductor MR2 is in a logical low condition, NOR gates **14H2** and **14H3** will have a logical high output each time master timer **16TM** transmits a logical low over conductor **10PPS.** The signal on conductor MR2 also enables address counter **13J** and four-bit

multiplex **1300** that are used to read out the telephone numbers stored in random acess memory 13RAM.

The signals on conductor **1401** are changed to 1 millisecond pulses by one shot **13K** causing counter **13J** to be in step with the clock pulses on conductor **C8** in FIGS. **12** and **14.** As the counter **13J** is pulsed by one shot **13K** it provides a binary-coded-decimal output on conductors **13A0-13A3,** through multiplexer **1300,** to all random access memories associated with the automatic dialer. Address counter **13J** will step from **0000** to **1111** and the corresponding storage area in the memory will be selected. As each storage area is addressed, the contents of that area will be present on conductors **13SO-13S3.**

When counter **13J** has counted to binary-coded-decimal **15** NAND gate **13R10** will transmit a low signal over conductor END. This low signal is inverted by inverter **14B6** to enable OR gate **14AB3** which, in turn, enables OR gate **14E3** to reset flip-flop **140PL.** The resetting of flip-flop **140PL** stops the clocing operation by disabling NOR gates **14H2** and **14H3.** With flip-flop **140PL** reset, relay **14OP** releases to disconnect the multifrequency modulator **1502** from the TT and TR conductors.

The output of the random access memory is transmitted in binary-coded-decimal over conductors **13SO-13S3** through OR gates **15Z1-15Z4** to decoder **15M** which converts the binary-coded decimal to a two-out-of-eight indication. Decoder **15M** is clocked by signals on conductor **1401** which are at clock speed, that is, **10PPS.** Since conductor **10PPS** also clocks the address counter **13J,** decoder **15M** will operate at the same rate so that only valid address information from the memory is transmitted to the multifrequency modulator **1502.** The output of decoder **15M** will cause one high and one low tone representing a digit to be transmitted by modulator **1502.**

The particular telephone number that is to be read out of one of the random access memory addresses is selected by a logical high on one of the conductors ALT or REG in FIG. **12,** a logical high on one of the pattern number conductors **N80'-N84'** and a clock pulse on conductor **C8.** When the pattern number **80** is selected and the regular telephone number is to be dialed AND gate **12R1** will be enabled to transmit a logical high over conductor **1200.** The logical high is inverted by NOR gate **12X1** to transmit a logical low over conductor **12CS1.**

If the customer at the station identified by the regular number does not answer within a selected time interval, a logical high signal will be transmitted on conductor ALT and conductor REG will go low. This causes gate **12R1** to turn off and gate **12P2** to turn on. With gate **12P2** on, a low signal is transmitted over conductor **12C6** to the random access memory wherein the alternate telephone number is selected.

The selection of alternate and regular telephone numbers from the random access memory is under control of circuitry in FIG. **16.** When the automatic dialer was initially seized the signal on conductor S causes NAND gate **14I2** to have a low output and EXCLUSIVE OR gate **14AA** to have a high output which is transmitted over conductor SD to unlok the J-K binaries. The high on conductor SD is also inverted by inverter **16C1** to trigger one shot **16KC** which will first set the J-K binaries to the regular telephone number position.

If answer supervision is not received from the auxiliary line circuit on conductor **811** via the conferee port within the time-out interval, the logical low from master timer **16TM** is transmitted to gate **16A3** to trigger one shot **16KB,** thereby resetting the automatic dialer. Timer **16TM** transmits a low on conductor **1601** after the no-answer timing interval and this low is inverted by inverter **16C6** which enables OR gate **16J2,** whose output is inverted by inverter **16C2.** The output of inverter **16C2** triggers one shot **16KD** which enables OR gate **16J3** to advance to J-K binaries **16L1** and **16L2.** The J-K binaries disconnect a logical high from conductor REG and apply the high to conductor ALT. The alternate telephone number will now be dialed and if answer supervision is not returned within the prescribed interval the J-K binaries **16L1** and **16L2** will shift back causing the regular telephone number to be dialed.

In the event the originator wishes to stop the automatic dialers, he transmits a control character and the code **85.** This causes a logical high to be transmitted from code driver **112** (shown in FIG. **9**) over conductor FC to the automatic dialers. Gate **14A2** will have a logical high output and the EXCLUSIVE NOR gate **14AA** will transmit a low on stop-dialer conductor SD to lock the operation of J-K binaries **16L1** and **16L2.** The output of gate **14A2** also enables OR gate **14F2** which enables OR gate **14AB1** to signal over conductor MR1 thereby stopping master timer **16TM.** In addition, the output of gate **14A2** enables OR gate **14AB4** which, in turn, enables OR gates **14E1** and **14E3** to reset flip-flops **14DTL** and **14OPL** thereby releasing the corresponding relays **14DT** and **14OP.** Finally, the output of gate **14A2** will enable NOR gate **14D3** to transmit a logical low over E lead **805** to remove the seizure signal from the auxiliary line circuit at the switching center.

As mentioned above, the automatic dialers are programmed from program control **120** which has not been shown in detail to simplify the Drawing. A particular automatic dialer is selected by signals on the port tens and port units conductors PT and PU which are individual to each conferee port. The address in memory to be changed is selected by signals over conductors NA-ND from program control **120** and stored in decoder **1201** while the new telephone number to be inserted in the memory is transmitted from program control **120** over conductors **D0-D3** under the control of a signal on write enable conductor WE.

Summary

As can be seen from the above description, the conference arrangement is connected to a telephone switching center and comprises a transmission bridge having an originator's port circuit and a plurality of conferee port circuits. Each conferee port circuit is equipped with an automatic dialer that is programmed to establish connections via the switching center to regular and alternate telephone numbers identifying the desired conferees. Associated with the originating port circuit is a dial pulse register for receiving the precedence and pattern number digits from the switching center and these digits are forwarded to the automatic dialers to establish a precedence level for the conference call and to select a particular program or group of conferees to be summoned.

Also associated with the orginating port circuit is a multifrequency receiver and decoder which responds

to tone signals transmitted by the originator's key set to control the various modes of operation of the conference arrangement.

The conference arrangement can function in a primary or secondary mode. When the conference originator is connected directly to a bridge, the bridge is said to be operating in its primary mode. While connected to a primary bridge the originator can cause a conferee port circuit to establish a connection to another bridge which is then operated in its secondary mode. Selective control of primary and secondary bridges is accomplished by the originator transmitting the number sign # or the asterisk * preceding each command code.

The following is a list of some of the two-digit command codes that have been used in the exemplary embodiment of the invention:

Codes	Function
00	Used by the originator to return to the transmission bridge from the ad-lib bus.
01–57	Used to select a particular conferee port.
70	Releases the broadcast mode of operation.
71	Starts conference alerting tone.
72	Activates the broadcast mode.
73	Used to disconnect a conferee from a port so that originator may dial a new conferee. This code must be preceded by a port address.
75	Used by the originator to disconnect a conferee without receiving new dial tone.
80–84	Automatic dialing pattern numbers.
85	Stops the operation of the automatic dialer for the duration of the conference call.
86	Releases automatic dialer and automatic dialer can be restarted by sending one of the pattern number codes.

What is claimed is:

1. A conference arrangement for use with a switching system comprising a multiport transmission bridge, an originating circuit for coupling a calling customer station to a port of said bridge, a plurality of terminating circuits each for coupling a called customer station to a corresponding port of said bridge, and control means responsive to signals received from said calling station for selecting each individual one of said terminating circuits and thereafter selectively controlling the mode of voice path coupling of said selected terminating circuits in response to additional signals.

2. The conference arrangement defined in claim **1** wherein said control means comprises code driver means for placing said terminating circuits in any of the disconnect, broadcast or private conversation modes in response to said additional signals.

3. The conference arrangement defined in claim **1** wherein said signals comprise coded signals, whrein said control means comprises decoder means having an input responsive to said coded signals for translating each said coded signal into an M-out-of-N output signal (where M and N are integers), and wherein is also provided code driver means for transmitting said output signals to said originating and terminating circuits.

4. The conference arrangement defined in claim **3** wherein each said called station is identified by an address and wherein each said terminating circuit also comprises apparatus effective when actuated for automatically dialing a preselected one of said addresses to summon a wanted called station for connection to said transmission bridge.

5. The conference arrangement as defined in claim **4** wherein said code driver means comprises a first code driver circuit responsive to a first series of said M integers for controlling said originating circuit, a second code driver circuit responsive to a second series of said M integers for controlling said terminating circuits and a third code driver circuit responsive to a third series of said M integers for controlling said dialing apparatus.

6. The conference arrangement defined in claim **5** wherein said coded signals represent a plurality of digits, and wherein said decoder means comprises first register means responsive to the registering of a first one of said digits for generating a first select signal corresponding to a particular one of said first register digits, second register means responsive to the registration of a second one of said digits for generataing a second select signal corresponding to the particular one of said second registered digits, and means for steering each received digit to a corresponding one of said first and second register means.

7. The conference arrangement defined in claim **6** wherein is also provided means coupling said first register means individually with each said code driver circuit to transmit a select signal to a particular one of said code driver circuits in accordance with the digit registered in said first register means and means coupling said second register means with all said code driver circuits to simultaneously transmit said second select signals to all said code driver circuits.

8. The conference arrangement defined in claim **7** wherein each said code driver circuit comprises means jointly responsive to said first select signal and said second select signal to generate a discrete signal to control one of said originating and terminating circuits and said dialers.

9. A conference arrangement for use with a telephone switching system comprising a multiport transmission bridge, an originating port circuit for coupling a calling station to a port of said bridge, a plurality of terminating port circuits each for coupling a called customer station to a corresponding port of said bridge, automatic dialer apparatus individually associated with each terminating port circuit and effective when actuated for dialing the addresses of preselected ones of said called customer stations, register means associated with said originating port circuit and responsive to first coded signals from said switching center for actuating said dialers, and receiver means coupled to said originating port circuit and responsive to second coded signals from said calling station for disabling said dialers.

10. The conference arrangement defined in claim **9** wherein each said dialer comprises a memory for storing a plurality of predetermined telephone numbers assigned to said called station, and control circuitry responsive to a dialing pattern number for reading out of said memory a particular one of said stored telephone

numbers in accordance with said dialing pattern number.

11. The conference arrangement defined in claim **10** wherein said first coded signals comprise first dialing pattern number signals received from said switching system, wherein second coded signals comprise second dialing pattern number signals received from said calling station, and wherein is also provided code driver means responsive to said first and second dialing pattern number signals to actuate said dialers.

12. A conference arrangement for use with a telephone switching center which serves a plurality of customer stations comprising a multiport transmission bridge, an originating port circuit for interconnecting a trunk circuit at said switching center with a port of said bridge, a plurality of terminating port circuits each for interconnecting a line circuit at said switching center with a port of said bridge, a plurality of automatic dialers each individually associated with a corresponding one of said terminating port and line circuits and each responsive to the receipt of patterned number signals for initiating a request for service by said switching center over its corresponding line circuit, means effective upon the establishment of a connection from a calling one of said stations to said originating port circuit for registering a plurality of digit signals received from said switching center, means effective after said calling station is connected to said bridge for receiving coded signals from said calling station, and means responsive to said digits and said coded signals for generating said pattern number signals to actuate said dialers.

13. The conference arrangement defined in claim **12** wherein each said dialer comprises a memory including a plurality of regular telephone numbers associated with a first group of called customer stations and a plurality of alternate directory numbers associated with a second group of called customer stations and means effective upon the receipt of a particular patterned number signal for alternately reading out of said memory one of said regular telephone numbers and one of said alternate telephone numbers.

14. The conference arrangement defined in claim **13** wherein each said dialer comprises means effective when a service request is initiated by said dialer for detecting dial tone transmitted from said switching center, means responsive to said detecting means for transmitting a particular one of said regular telephone numbers to said switching center, means actuated by said transmitting means for timing an interval and means effective at the end of said interval and in the absence of an answer signal from the called station identified by said particular telephone number for causing said transmitting means to transmit a designated one of said alternate telephone numbers.

15. A conference arrangement for use with a switching center serving a plurality of customer stations comprising a multiport transmission bridge, an originating port circuit for coupling a calling one of said stations to a port of said bridge, a plurality of terminating port circuits connected to said bridge, a communication bus common to said port circuits, dialer means responsive to signals received from said switching center for causing each of said terminating port circuits to establish a communication path from said bridge to an individual called one of said stations, and means responsive to coded signals received from said calling station for selective controlling said port circuits.

16. The conference arrangement defined in claim **15** wherein said decoder means comprises means responsive to a particular one of said coded signals for selectively transferring said calling station and one of said called stations from said bridge to said bus.

17. The conference arrangement defined in claim **15** wherein said decoder means comprises circuit means responsive to a particular one of said coded signals for causing a selected one of said terminating port circuits to disconnect the corresponding communication path between a called station and said bridge.

18. The conference arrangement defined in claim **17** wherein said circuit means comprises means for causing said selected terminating port circuit to initiate a request for service by said switching center and wherein means are provided for interconnecting the originating port circuit with the selected port circuit over said bus to permit said calling station to transmit call-directing signals to said switching center via the selected port circuit.

* * * * *