UNIVERSAL LINE CONCENTRATOR

Filed Dec. 31, 1962 69 Sheets-Sheet 1

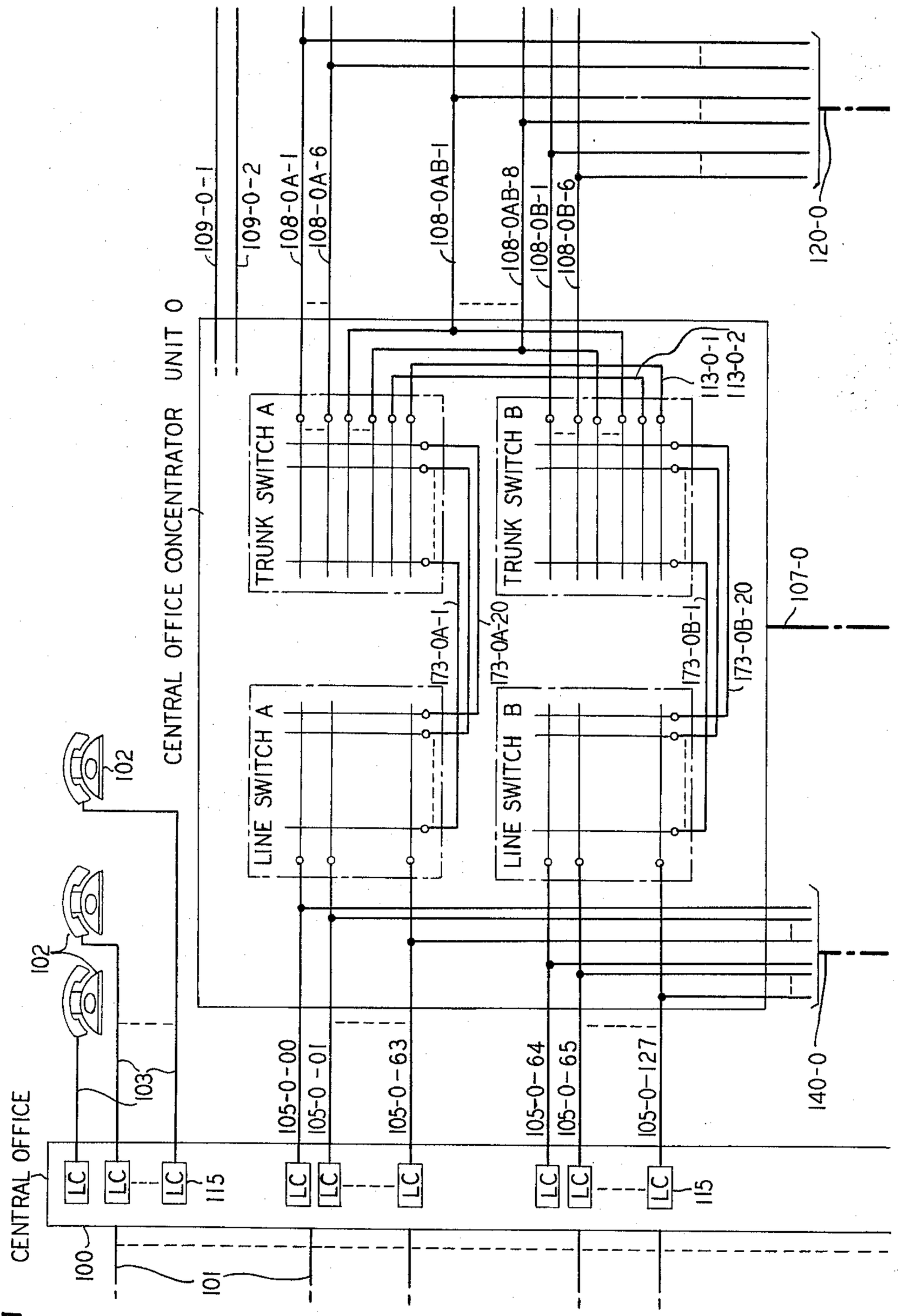

FIG. 1A

INVENTOR
R. G. FISHER
BY
S E Hollander
ATTORNEY

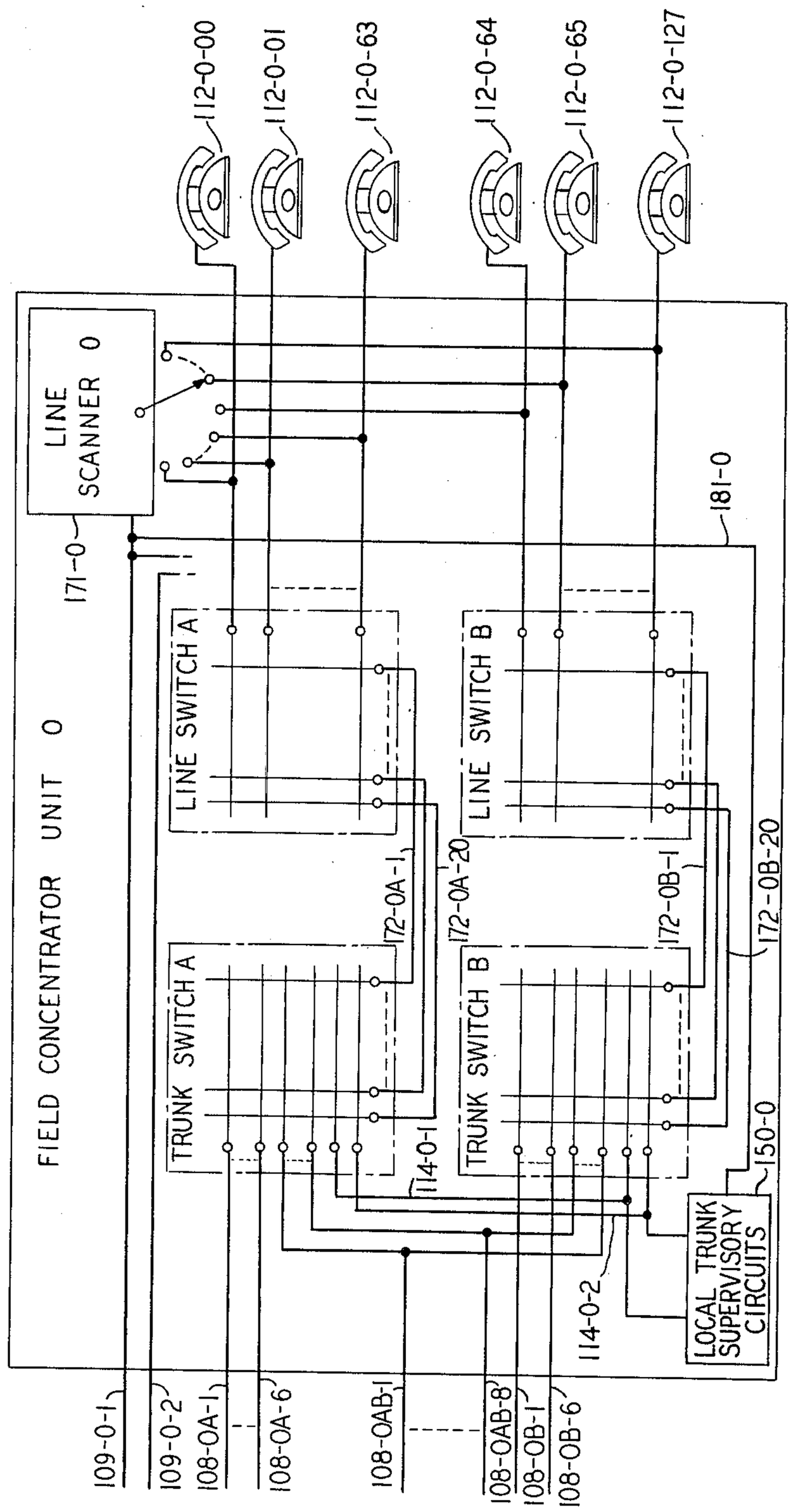
12-0-00
12-0-01
12-0-63
12-0-64
12-0-65
12-0-127
LINE SCANNER 0
171-0
181-0
FIELD CONCENTRATOR UNIT 0
LINE SWITCH A
LINE SWITCH B
172-0A-1
172-0A-20
172-0B-1
172-0B-20
TRUNK SWITCH A
TRUNK SWITCH B
114-0-1
114-0-2
150-0
LOCAL TRUNK SUPERVISORY CIRCUITS
109-0-1
109-0-2
108-OA-1
108-OA-6
108-OAB-1
108-OAB-8
108-OB-1
108-OB-6

FIG. 1B

UNIVERSAL LINE CONCENTRATOR

Filed Dec. 31, 1962 69 Sheets-Sheet 3

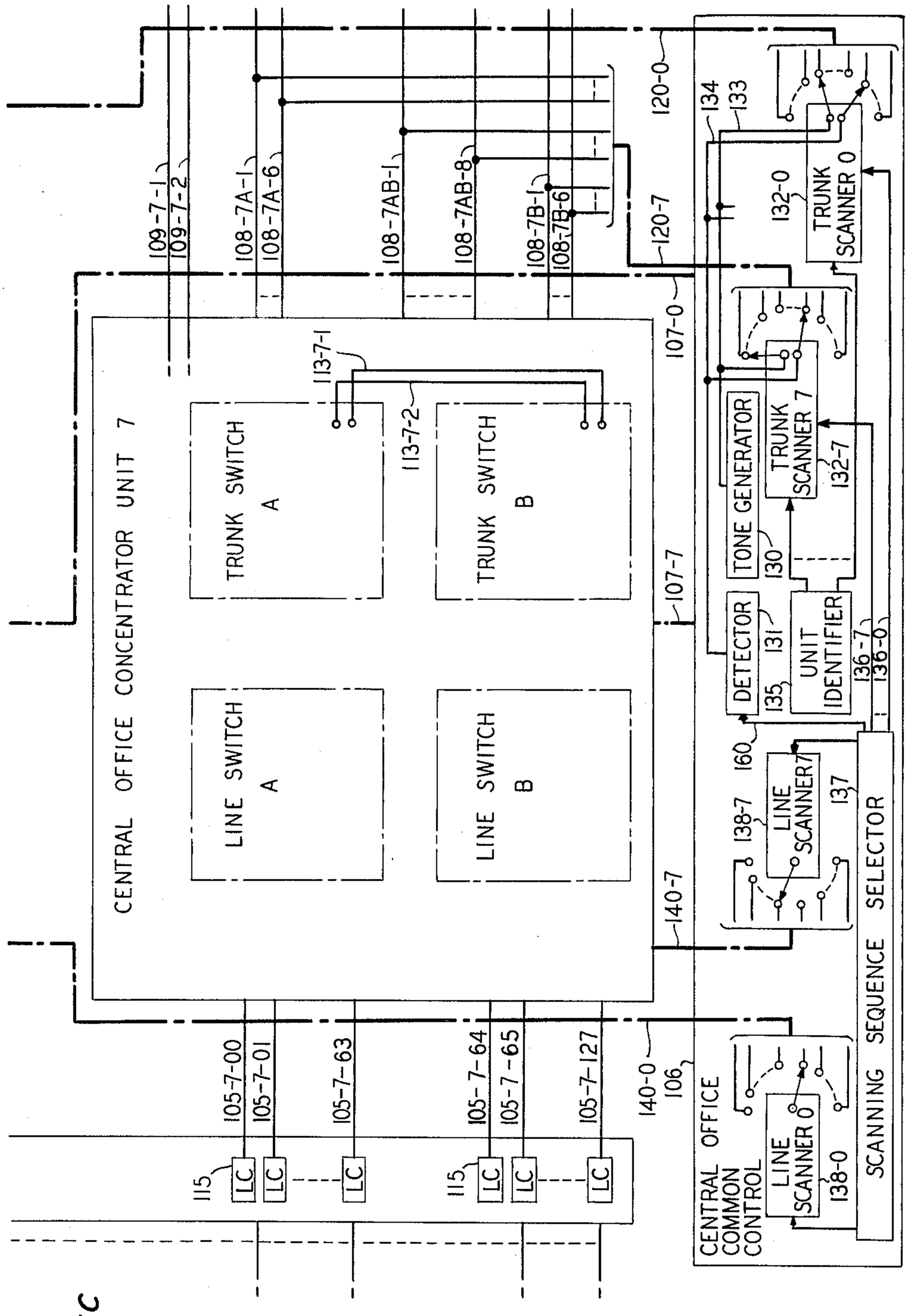

FIG. 1C

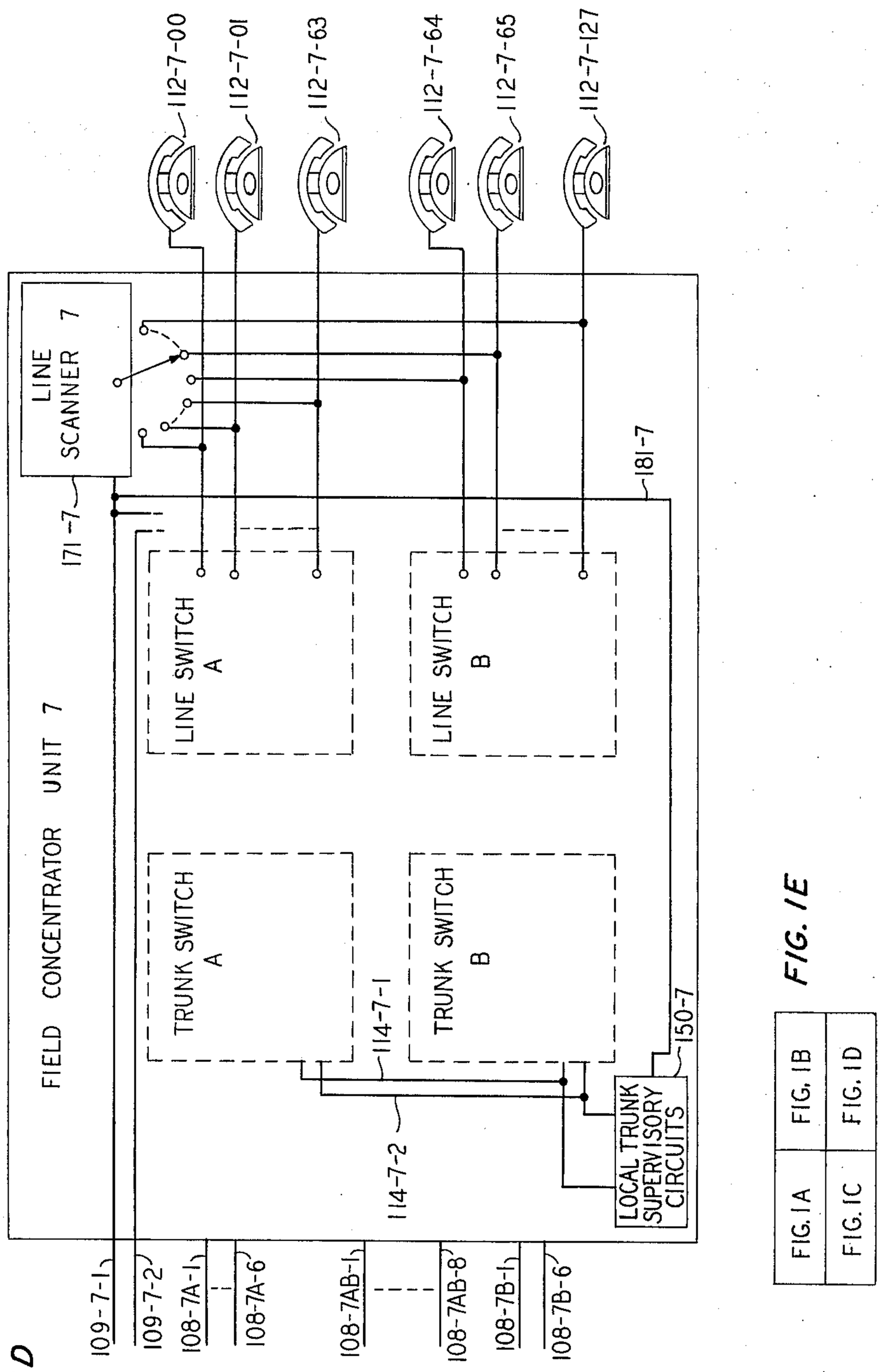

FIG. 1D

FIG. 1E

FIG. 1A	FIG. 1B
FIG. 1C	FIG. 1D

UNIVERSAL LINE CONCENTRATOR

Filed Dec. 31, 1962 69 Sheets-Sheet 5

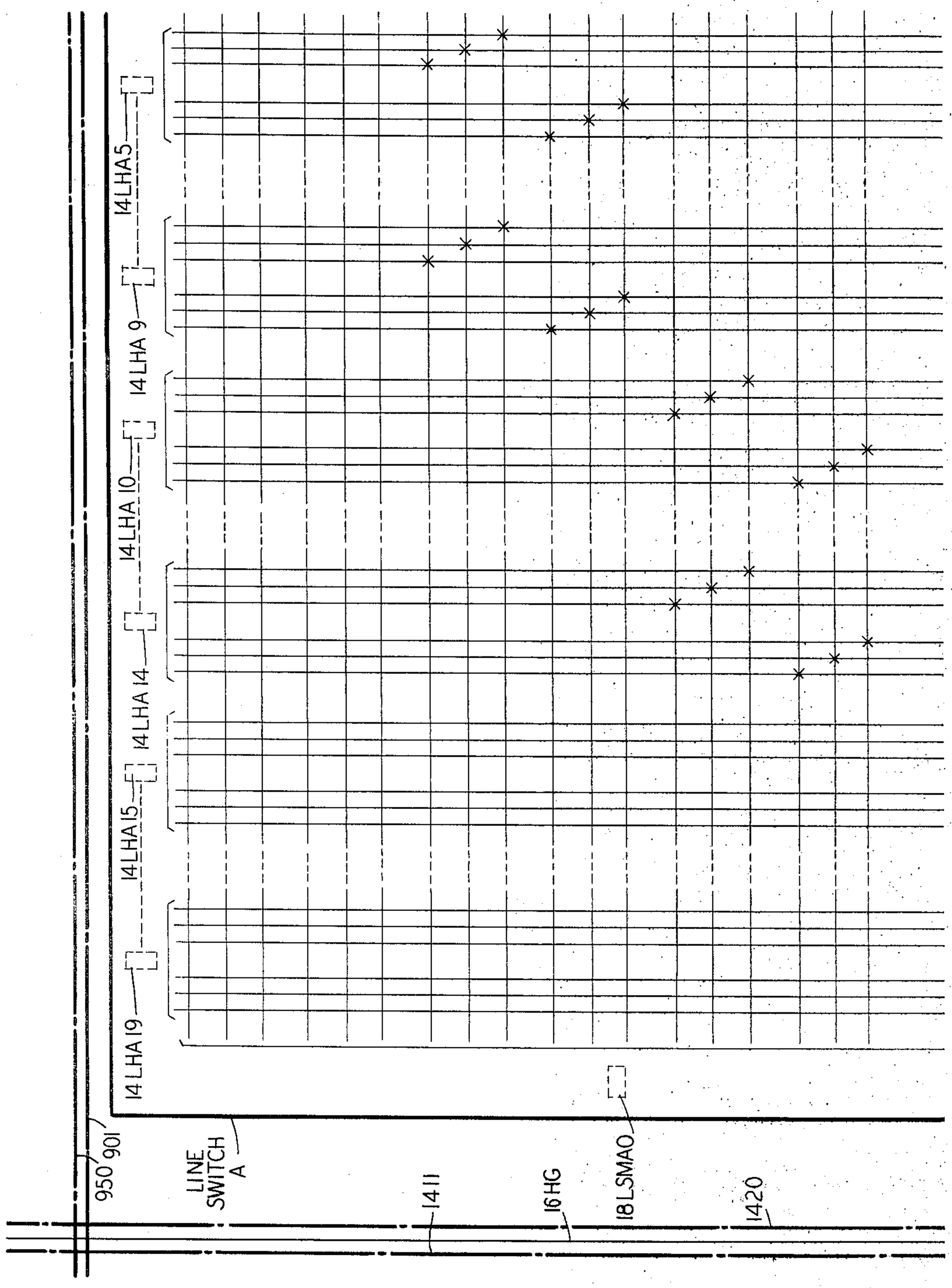

FIG. 2

UNIVERSAL LINE CONCENTRATOR

Filed Dec. 31, 1962 69 Sheets-Sheet 6

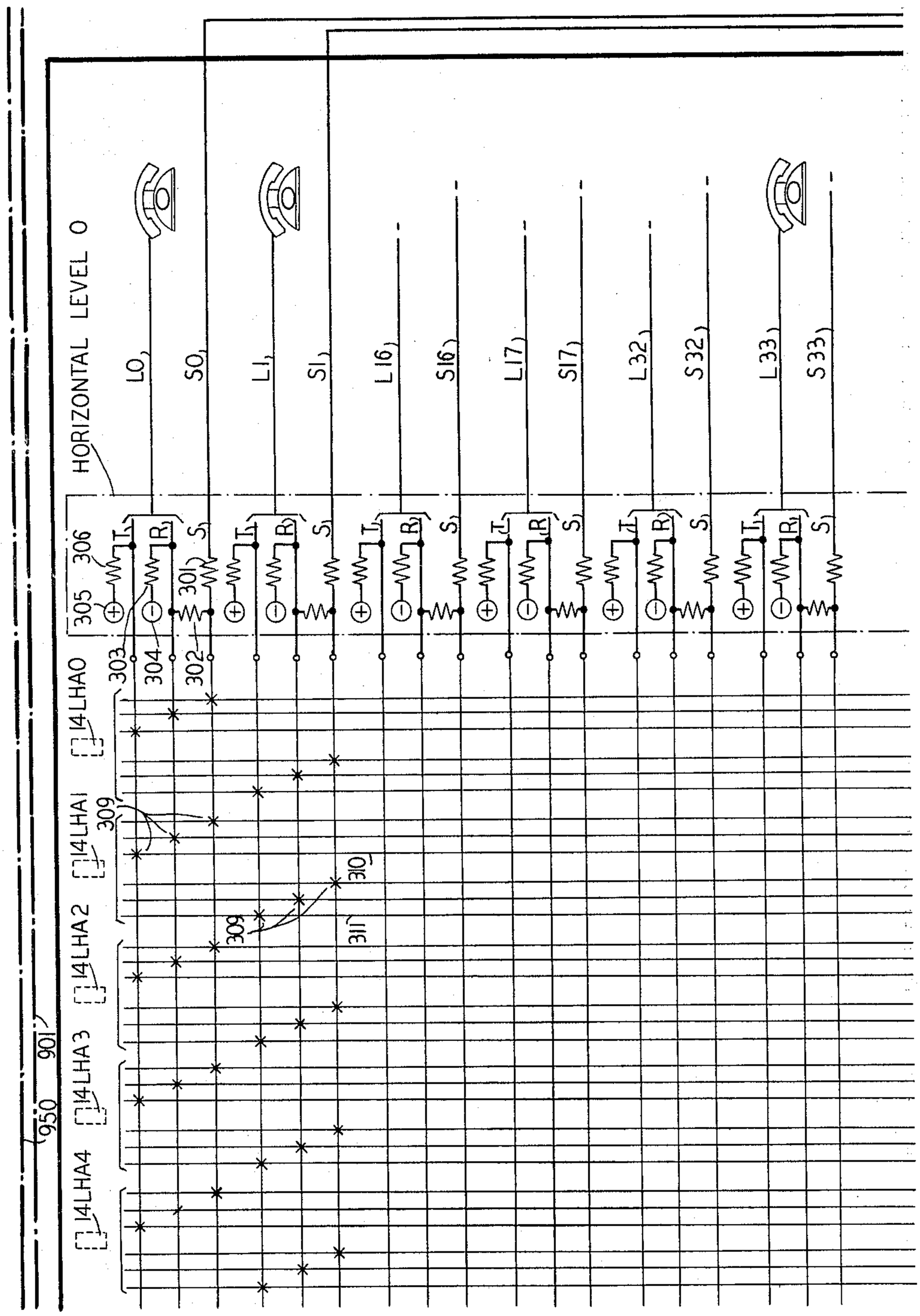

FIG. 3

UNIVERSAL LINE CONCENTRATOR

Filed Dec. 31, 1962 69 Sheets-Sheet 7

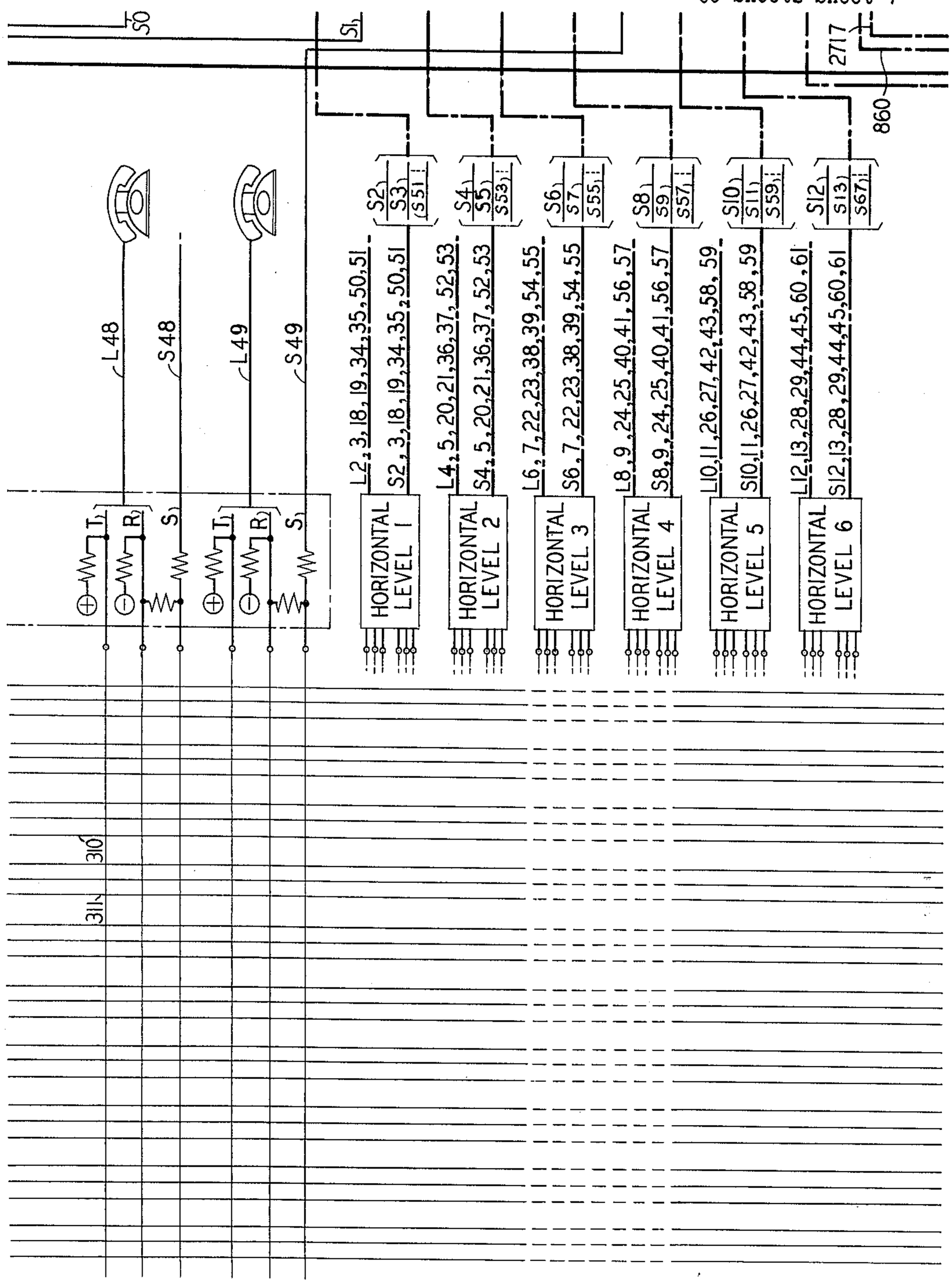

FIG. 4

UNIVERSAL LINE CONCENTRATOR

Filed Dec. 31, 1962 69 Sheets-Sheet 8

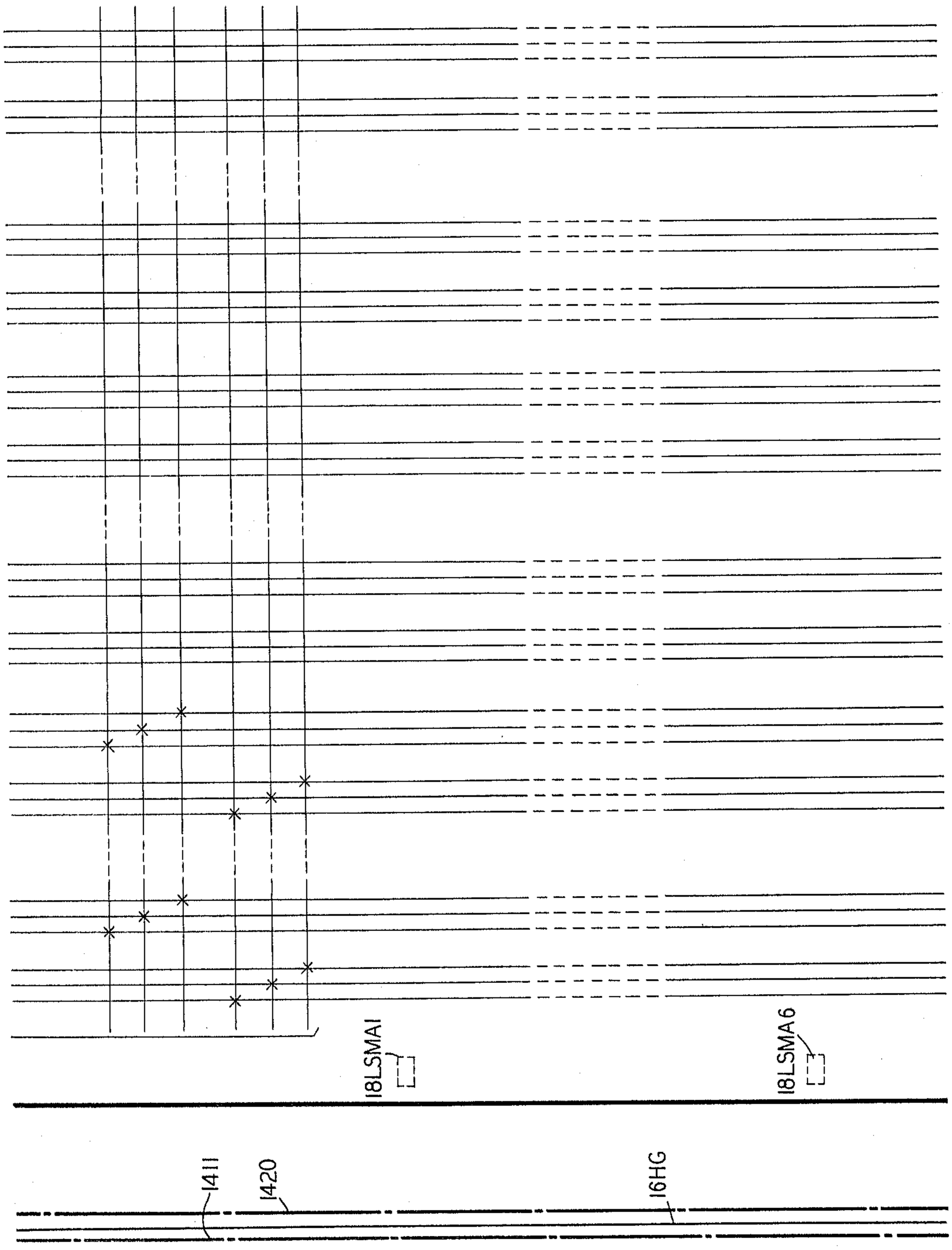

FIG 5

UNIVERSAL LINE CONCENTRATOR

Filed Dec. 31, 1962 69 Sheets-Sheet 9

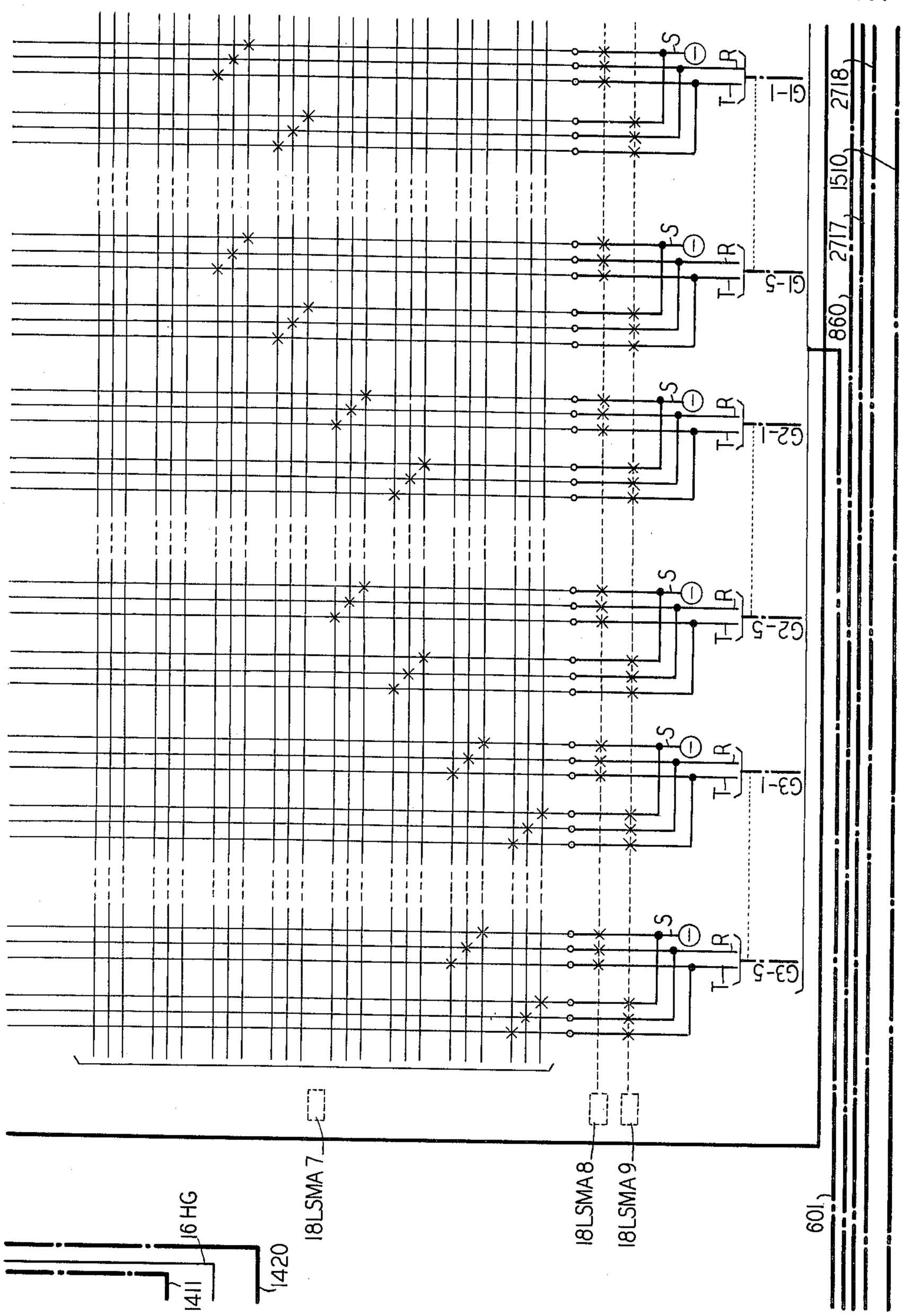

FIG. 6

UNIVERSAL LINE CONCENTRATOR

Filed Dec. 31, 1962

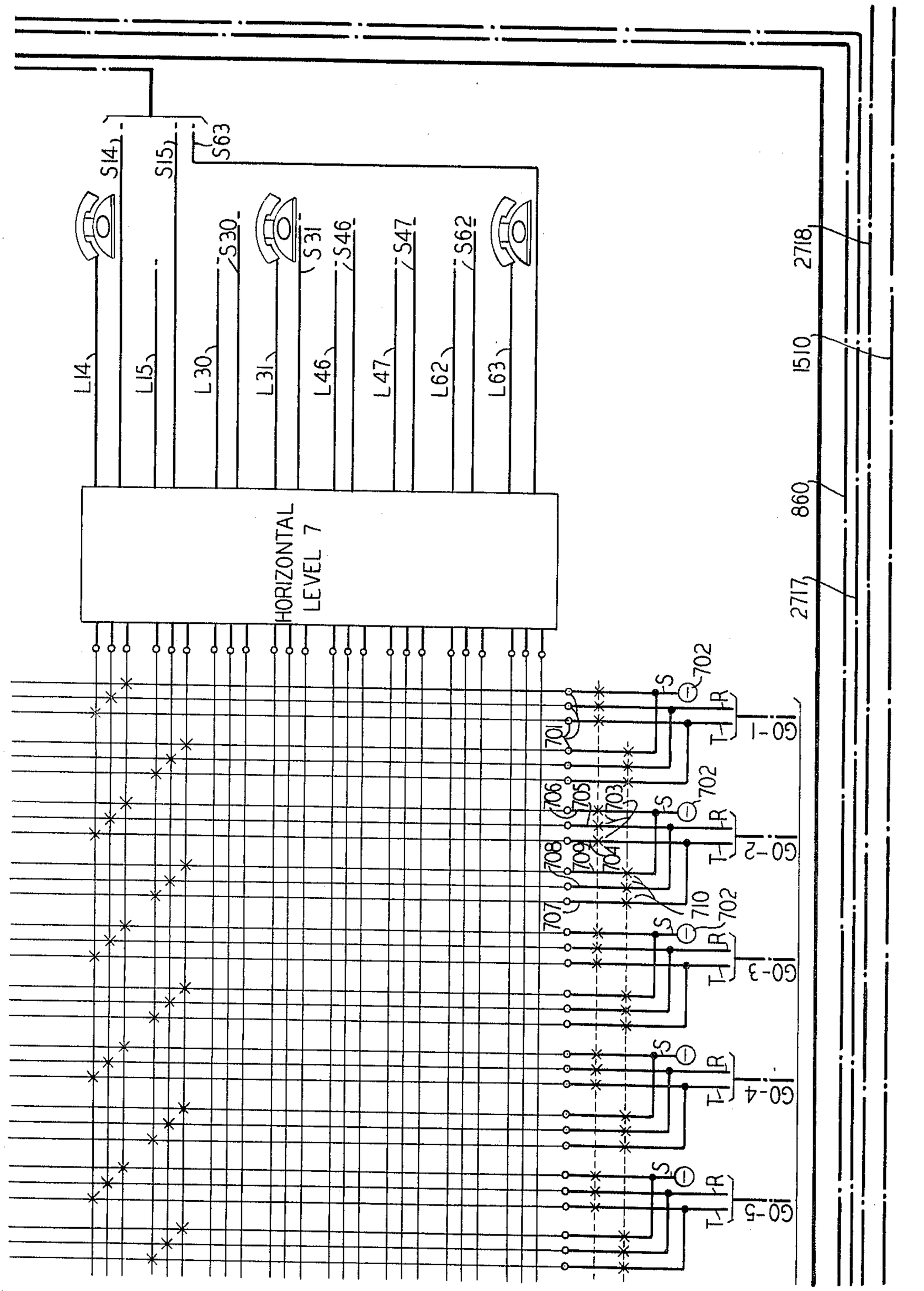

FIG. 7

UNIVERSAL LINE CONCENTRATOR

Filed Dec. 31, 1962 69 Sheets-Sheet 11

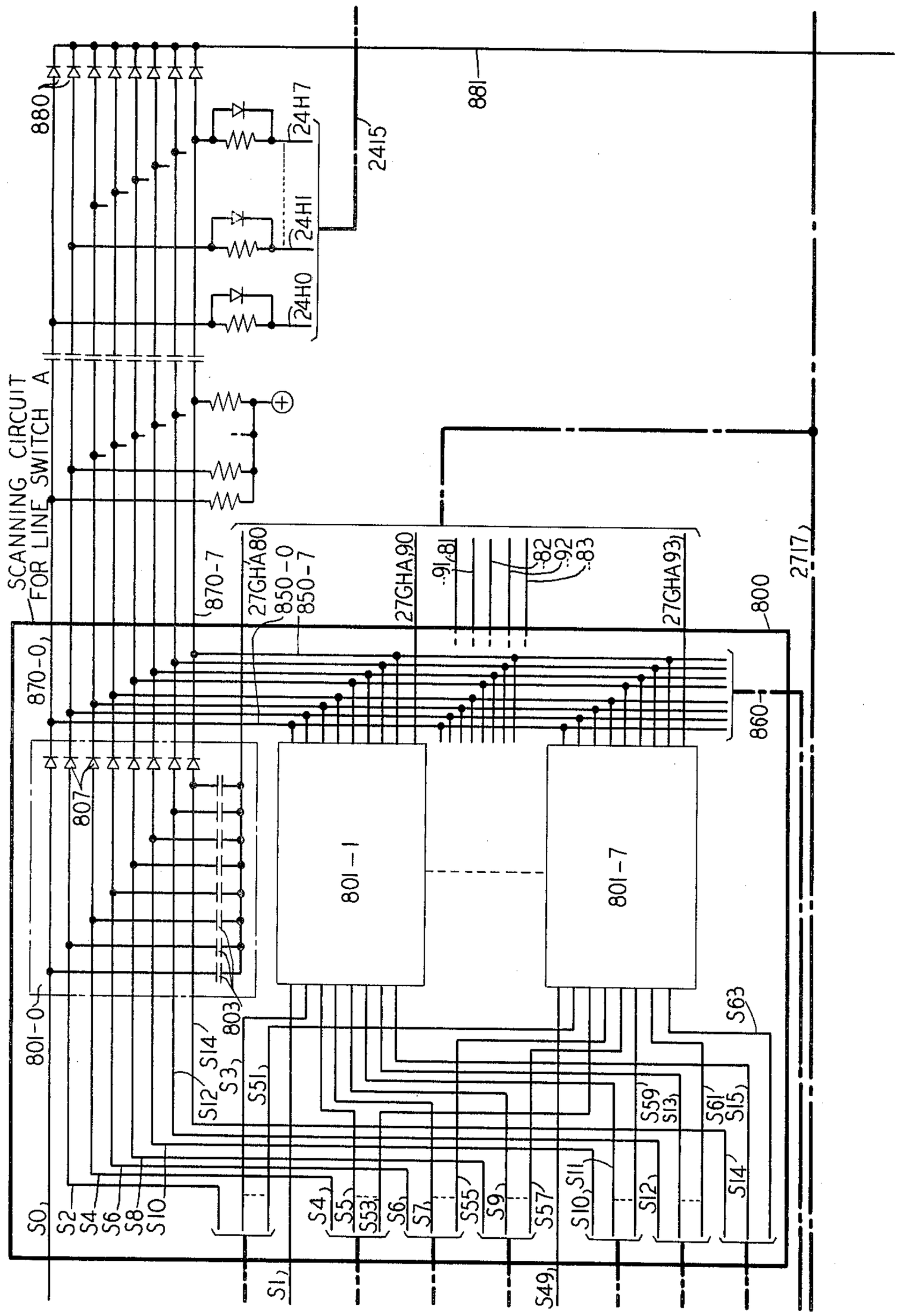

FIG. 8

UNIVERSAL LINE CONCENTRATOR

Filed Dec. 31, 1962 69 Sheets-Sheet 12

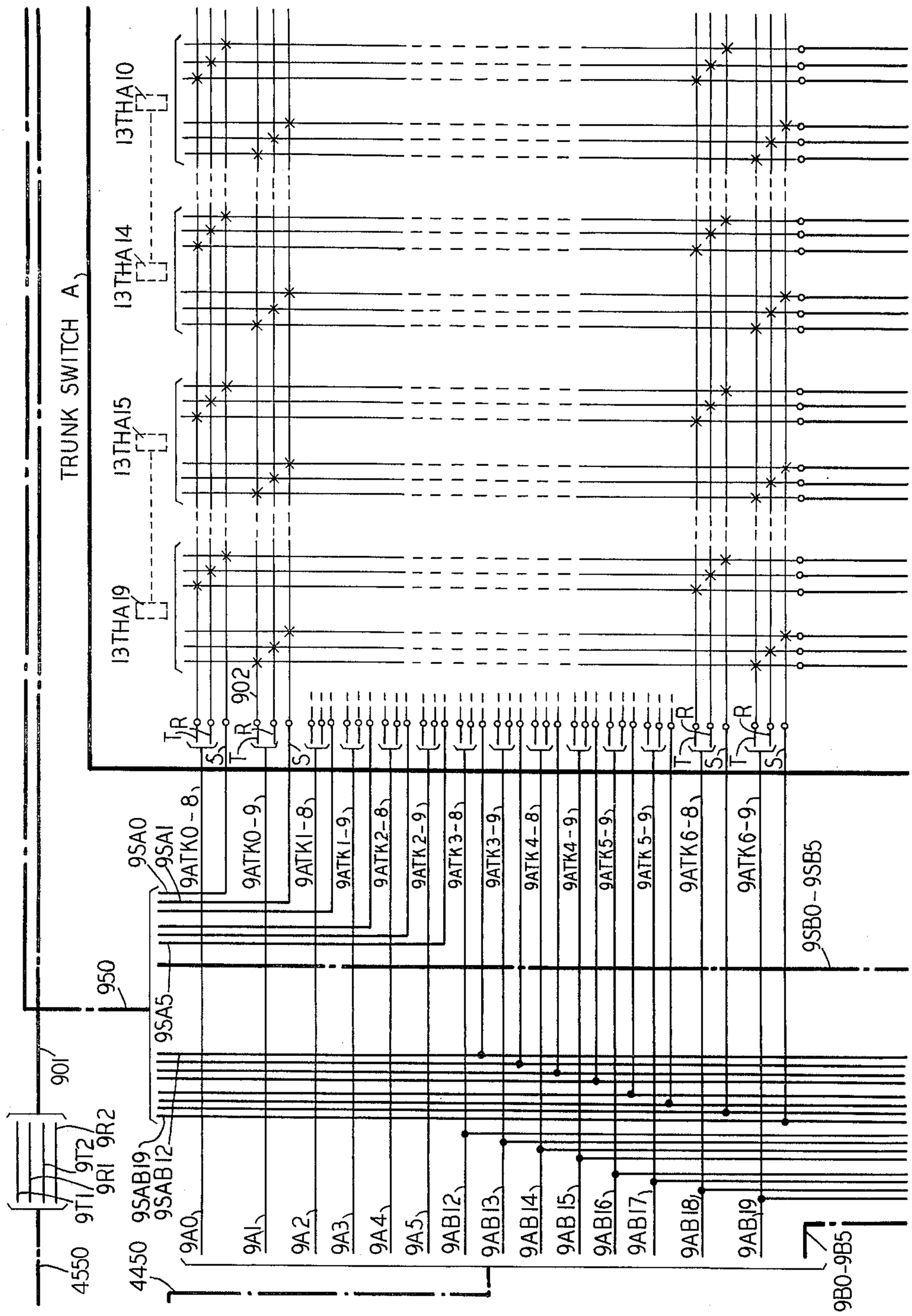

FIG. 9

UNIVERSAL LINE CONCENTRATOR

Filed Dec. 31, 1962 69 Sheets-Sheet 13

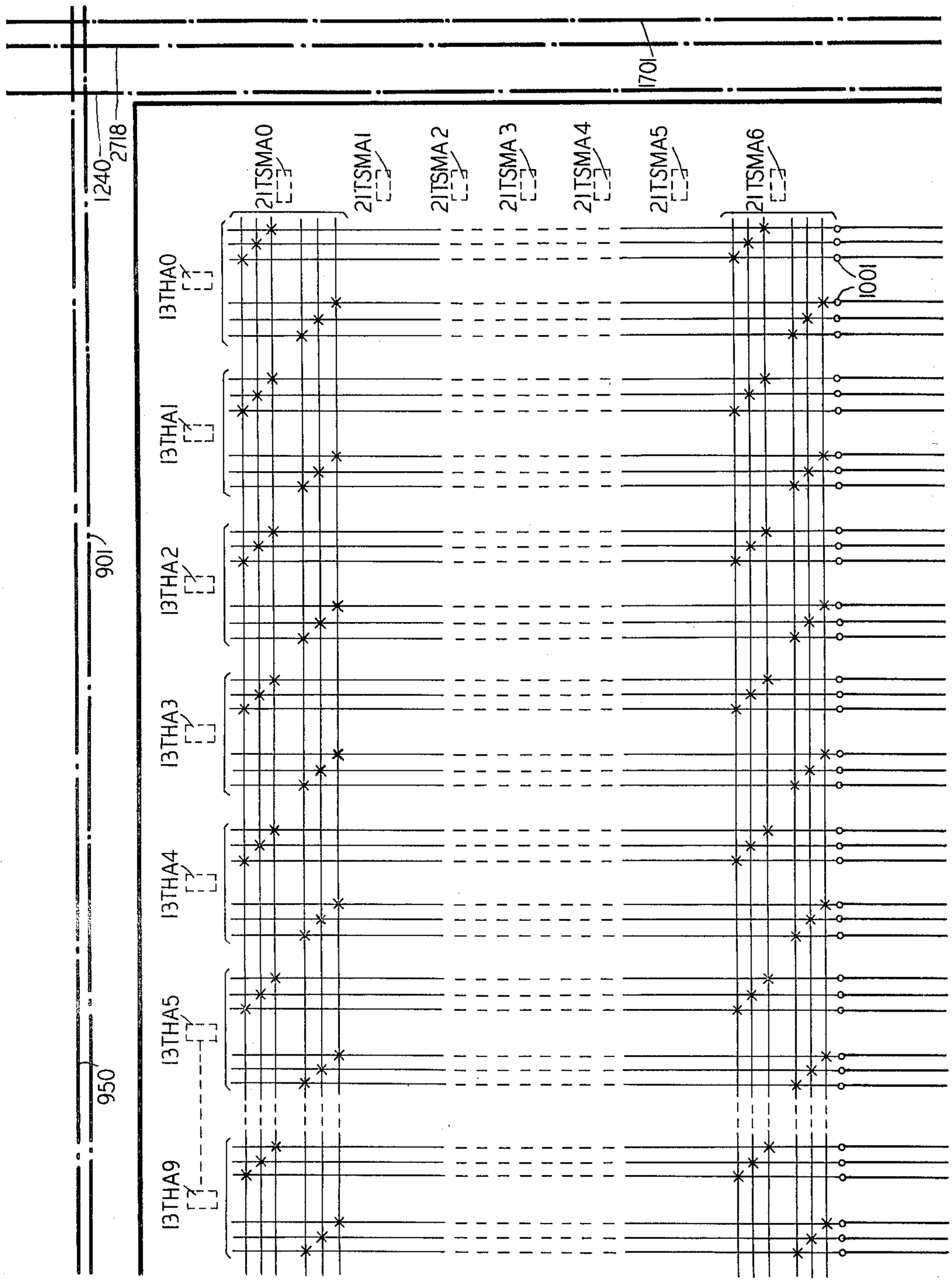

FIG. 10

UNIVERSAL LINE CONCENTRATOR

Filed Dec. 31, 1962 69 Sheets-Sheet 14

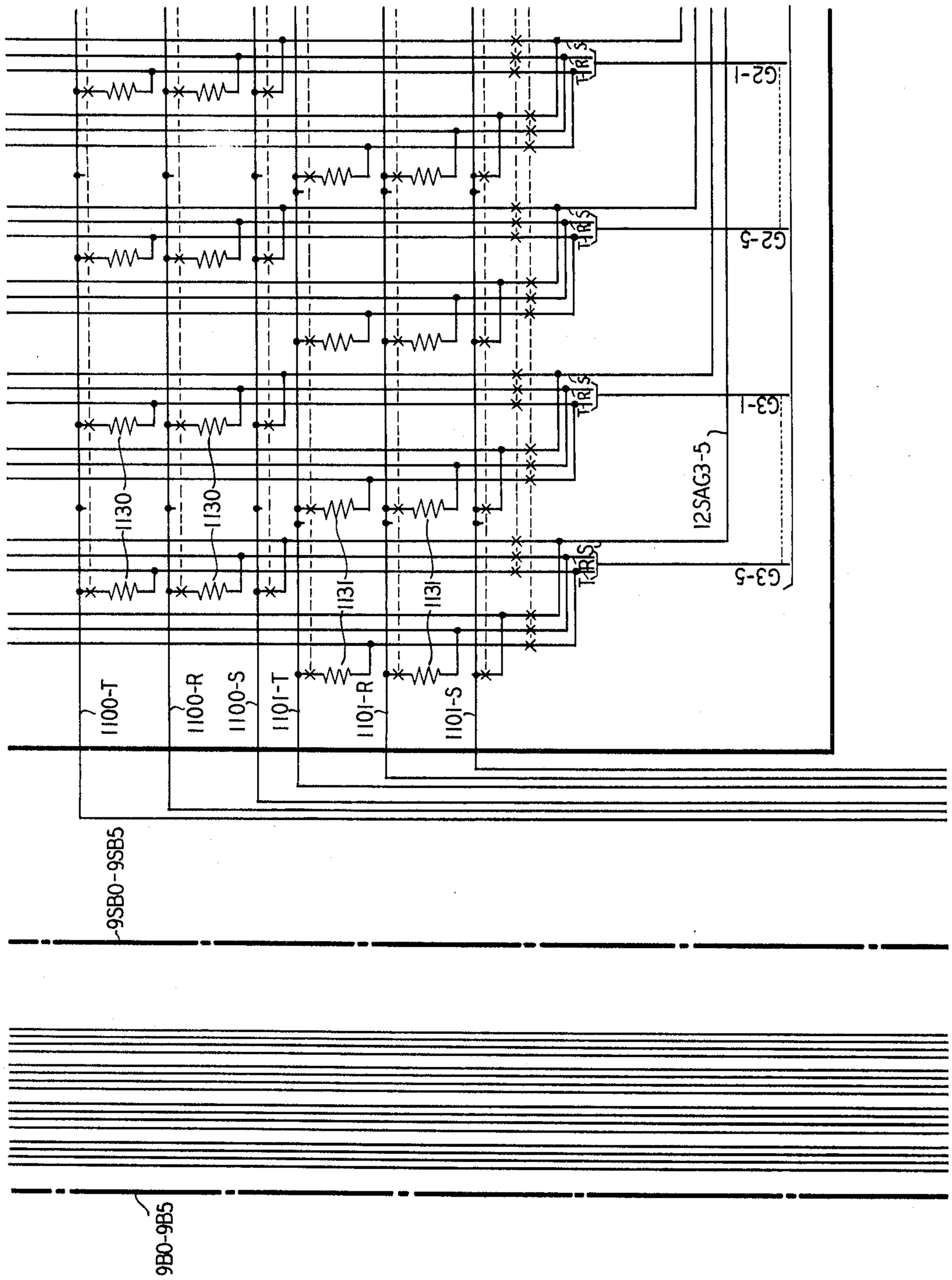

FIG. 11

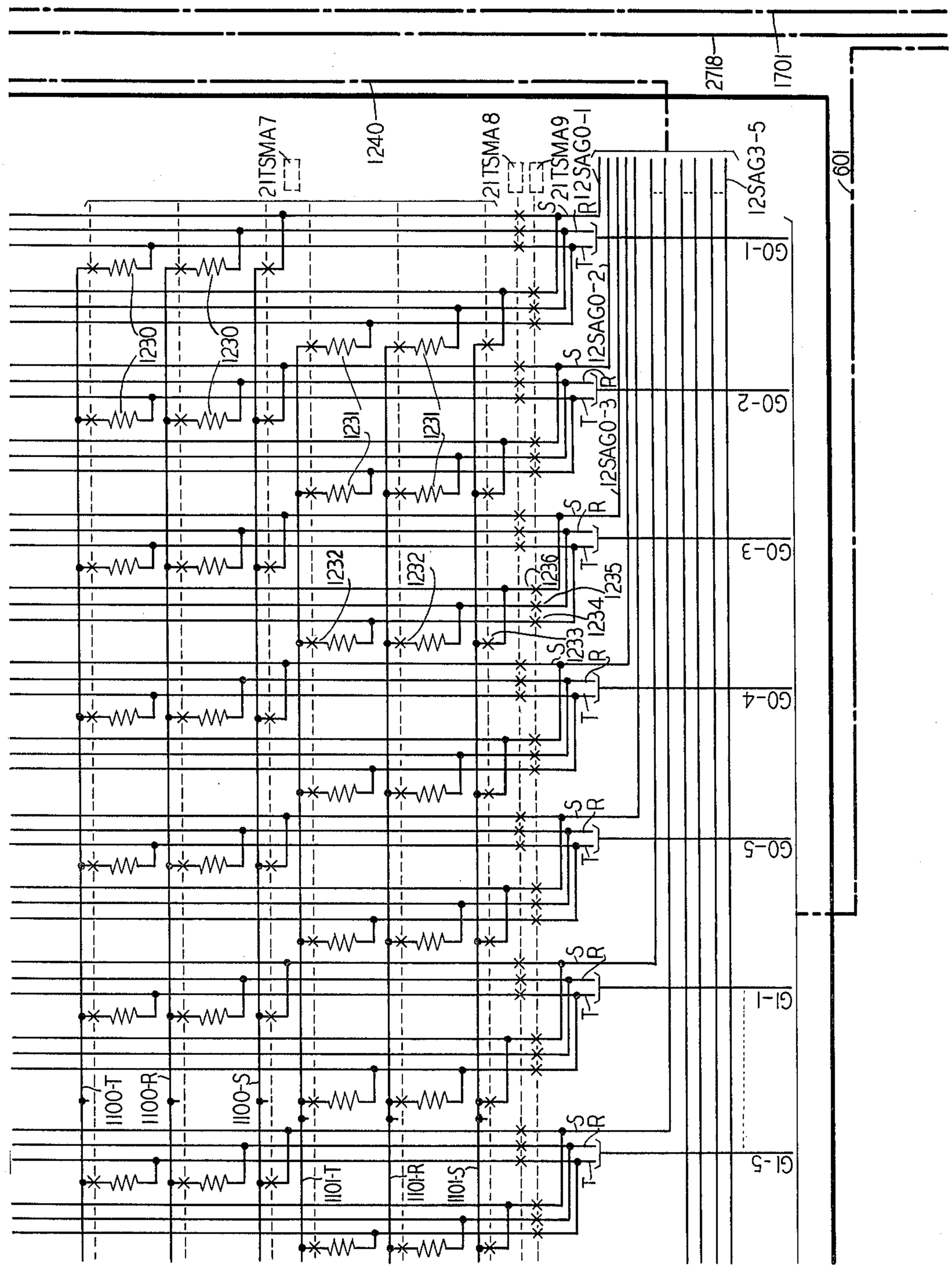
1240
2718
1701
601
21TSMA7
21TSMA8
21TSMA9
12SAG0-1
12SAG3-5
12SAG0-2
12SAG0-3
1230
1231
1232
1233
1234
1235
1236
1100-T
1100-R
1100-S
1101-T
1101-R
1101-S
G0-1
G0-2
G0-3
G0-4
G0-5
G1-1
G1-5
S
R
T

FIG. 12

UNIVERSAL LINE CONCENTRATOR

Filed Dec. 31, 1962 69 Sheets-Sheet 16

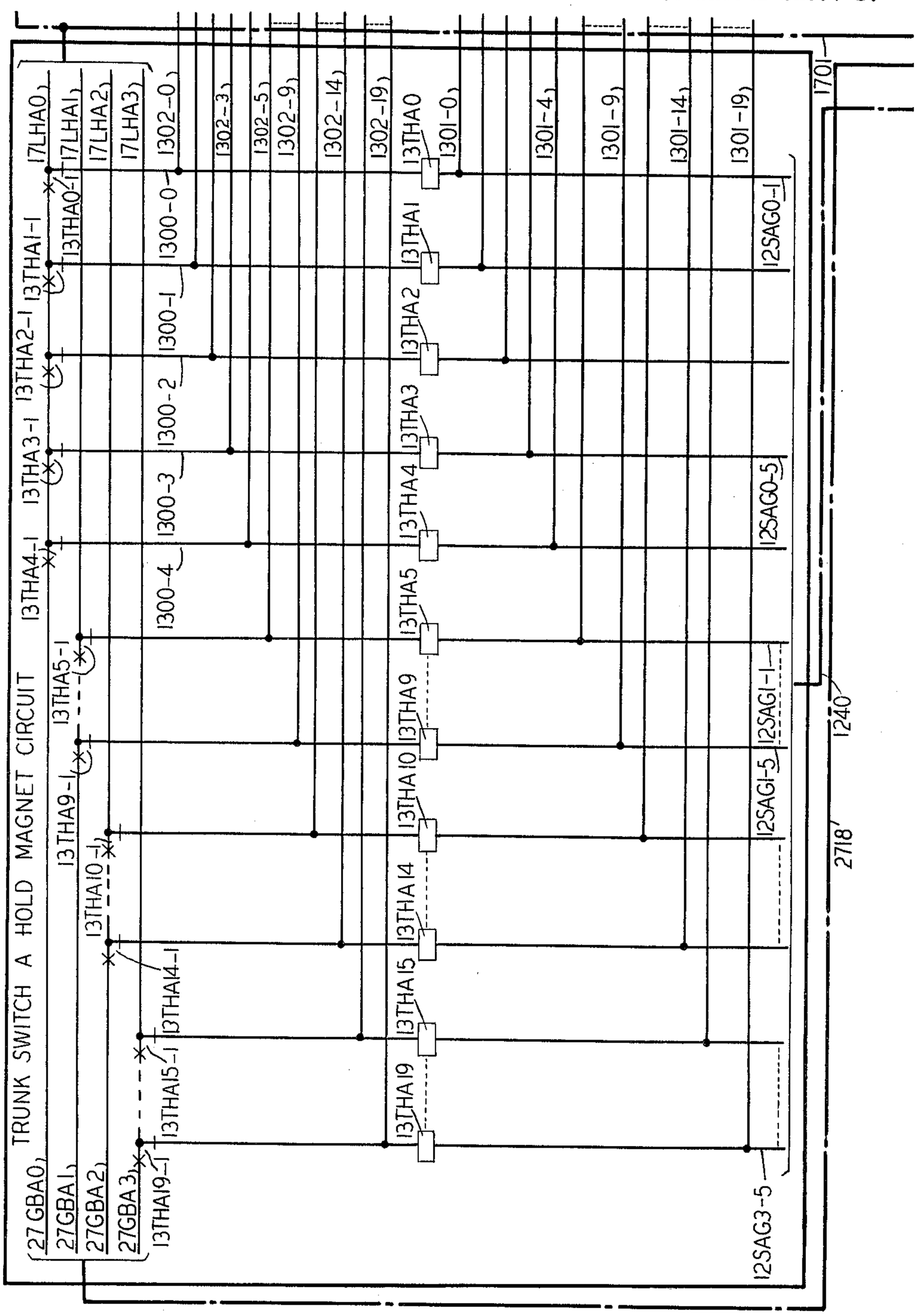

FIG. 13

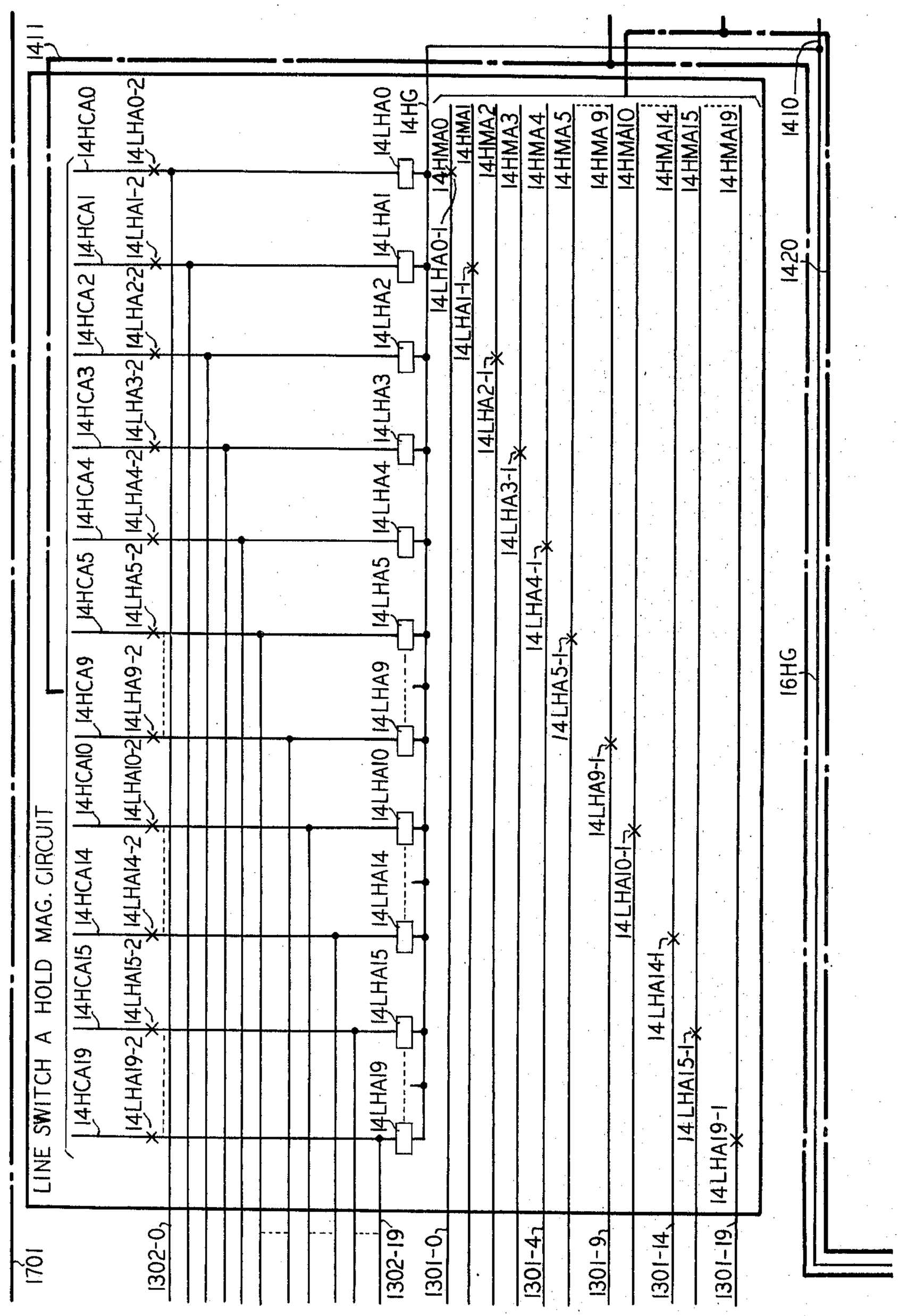
LINE SWITCH A HOLD MAG. CIRCUIT
1411
1410
1420
16HG
1701
1302-0
1302-19
1301-0
1301-4
1301-9
1301-14
1301-19
14HCA0
14LHA0-2
14HCA1
14LHA1-2
14HCA2
14LHA2-2
14HCA3
14LHA3-2
14HCA4
14LHA4-2
14HCA5
14LHA5-2
14HCA9
14LHA9-2
14HCA10
14LHA10-2
14HCA14
14LHA14-2
14HCA15
14LHA15-2
14HCA19
14LHA19-2
14LHA0
14HG
14LHA1
14LHA2
14LHA3
14LHA4
14LHA5
14LHA9
14LHA10
14LHA14
14LHA15
14LHA19
14HMA0
14HMA1
14HMA2
14HMA3
14HMA4
14HMA5
14HMA9
14HMA10
14HMA14
14HMA15
14HMA19
14LHA0-1
14LHA1-1
14LHA2-1
14LHA3-1
14LHA4-1
14LHA5-1
14LHA9-1
14LHA10-1
14LHA14-1
14LHA15-1
14LHA19-1

FIG. 14

UNIVERSAL LINE CONCENTRATOR

Filed Dec. 31, 1962 69 Sheets-Sheet 18

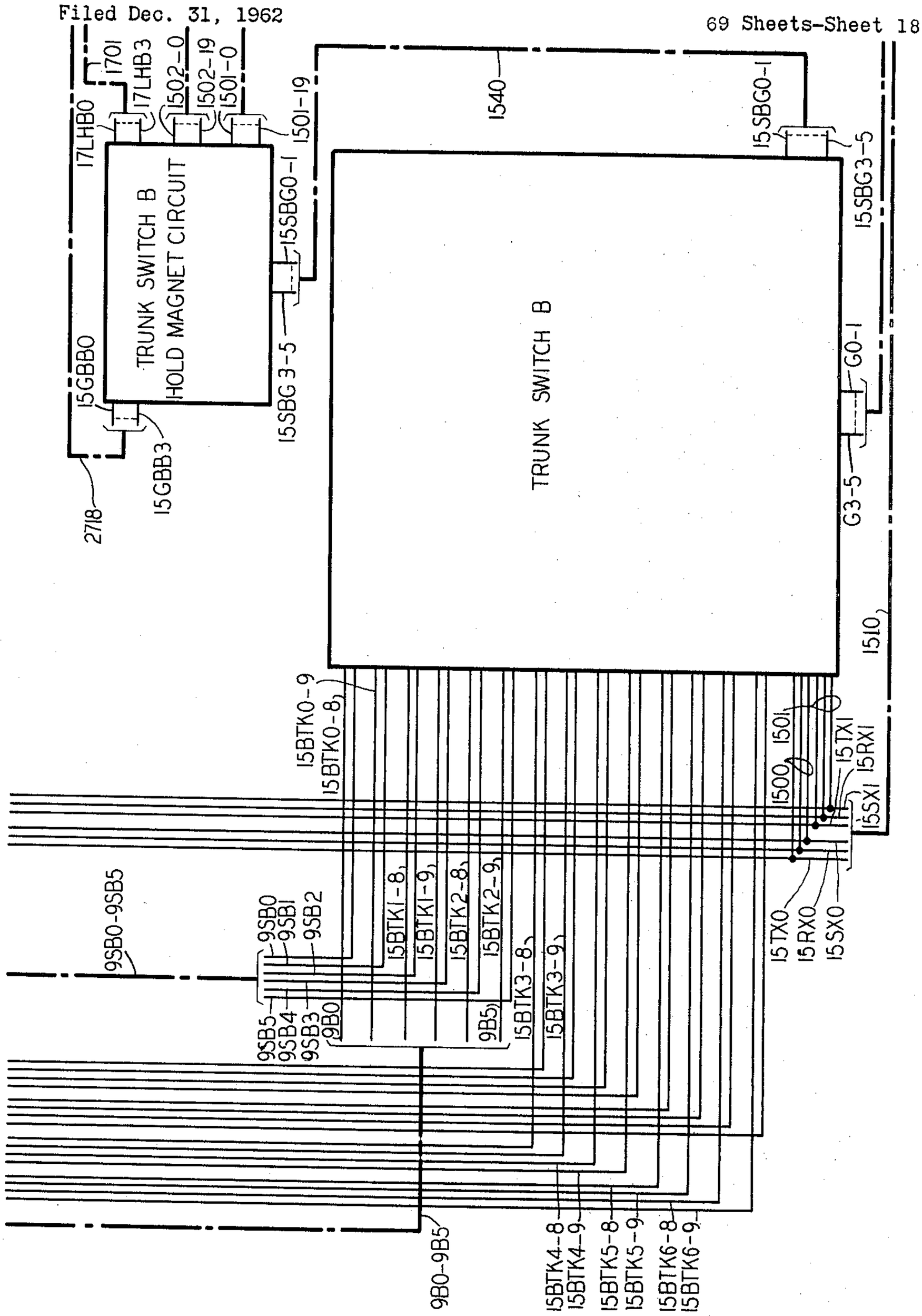

FIG. 15

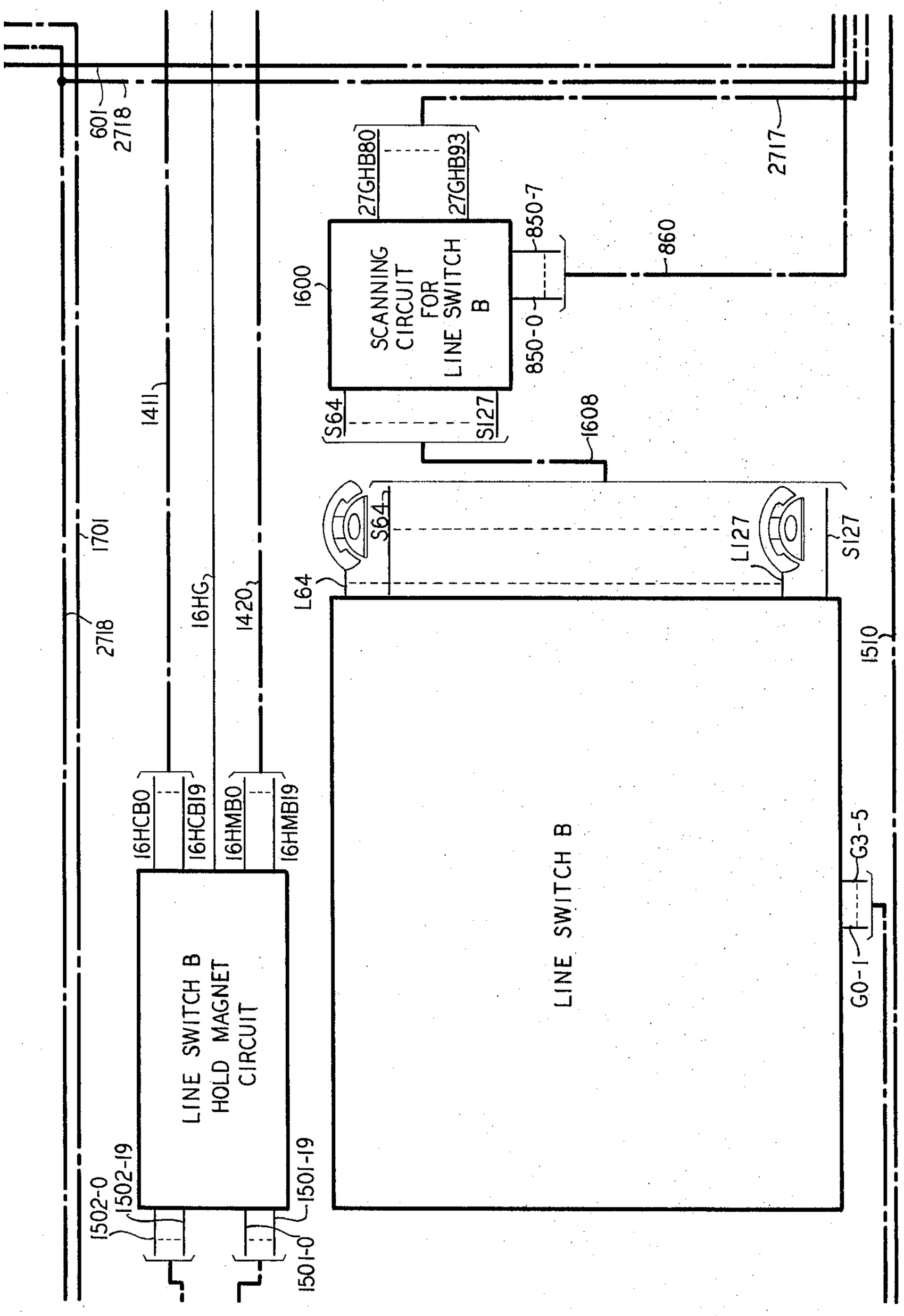
601
2718
2717
27GHB80
27GHB93
850-7
860
1600
SCANNING CIRCUIT FOR LINE SWITCH B
850-0
S64
S127
1411
1608
1701
S64
L127
S127
L64
2718
16HG
1420
1510
16HCB0
16HCB19
16HMB0
16HMB19
LINE SWITCH B
G3-5
G0-1
LINE SWITCH B HOLD MAGNET CIRCUIT
1502-19
1502-0
1501-19
1501-0

FIG. 16

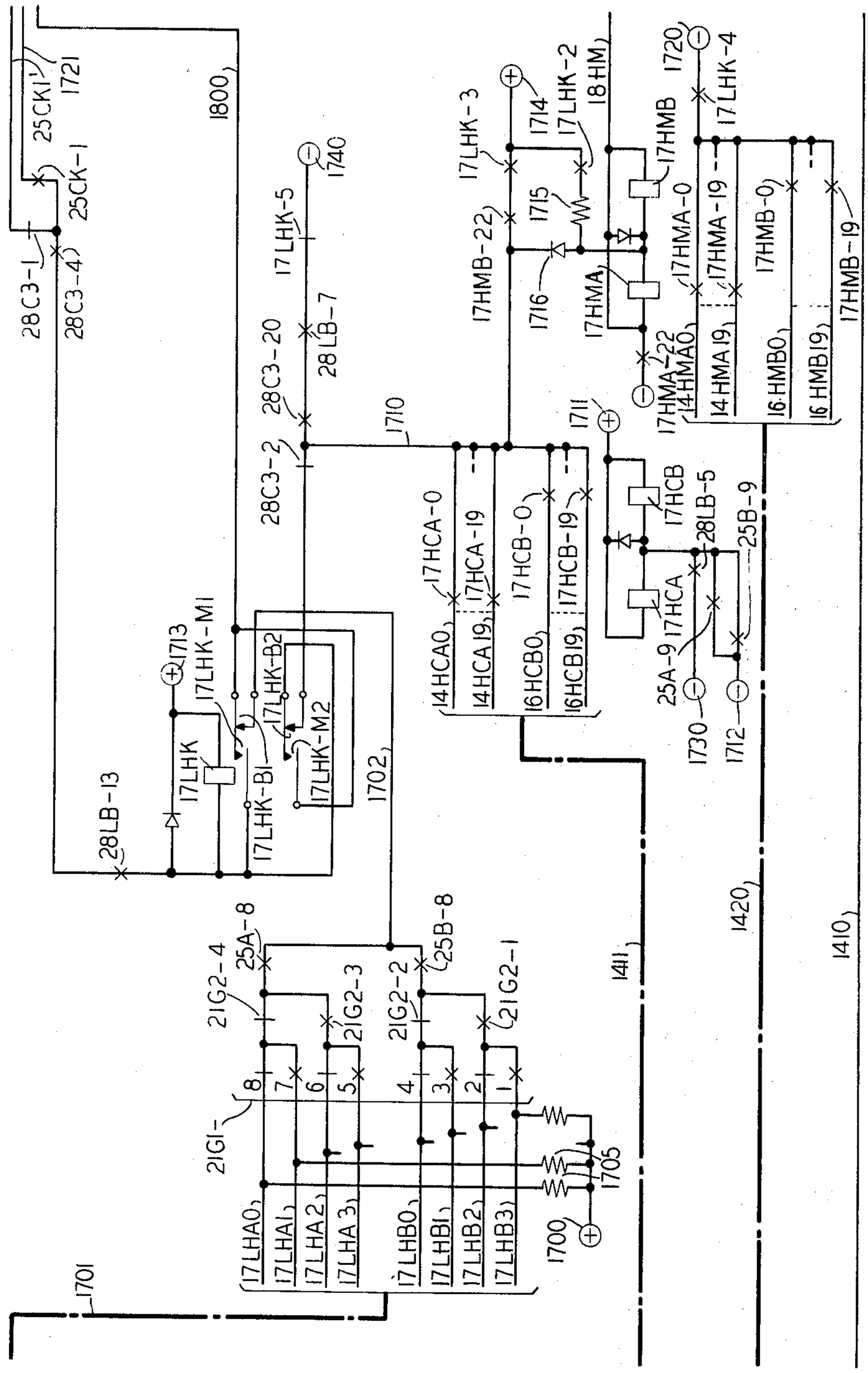
25CK1
1721
25CK-1
28C3-1
28C3-4
1800
1740
17LHK-5
28C3-20
28LB-7
28C3-2
1710
17LHK-3
1714
17LHK-2
18HM
17HMB-22
1715
1716
17HMA
17HMA-0
17HMB
1720
17LHK-4
17HMA-19
17HMB-0
17HMB-19
17HMA-22
14HMA0
14HMA19
16HMB0
16HMB19
1711
17HCA-0
17HCA-19
17HCB-0
17HCB-19
14HCA0
14HCA19
16HCB0
16HCB19
17HCB
28LB-5
25B-9
17HCA
25A-9
1730
1712
1713
17LHK-M1
17LHK
28LB-13
17LHK-B2
17LHK-B1
17LHK-M2
1702
25A-8
25B-8
21G2-4
21G2-3
21G2-2
21G2-1
21G1
17LHA0
17LHA1
17LHA2
17LHA3
17LHB0
17LHB1
17LHB2
17LHB3
1705
1700
1701
1411
1420
1410

FIG. 17

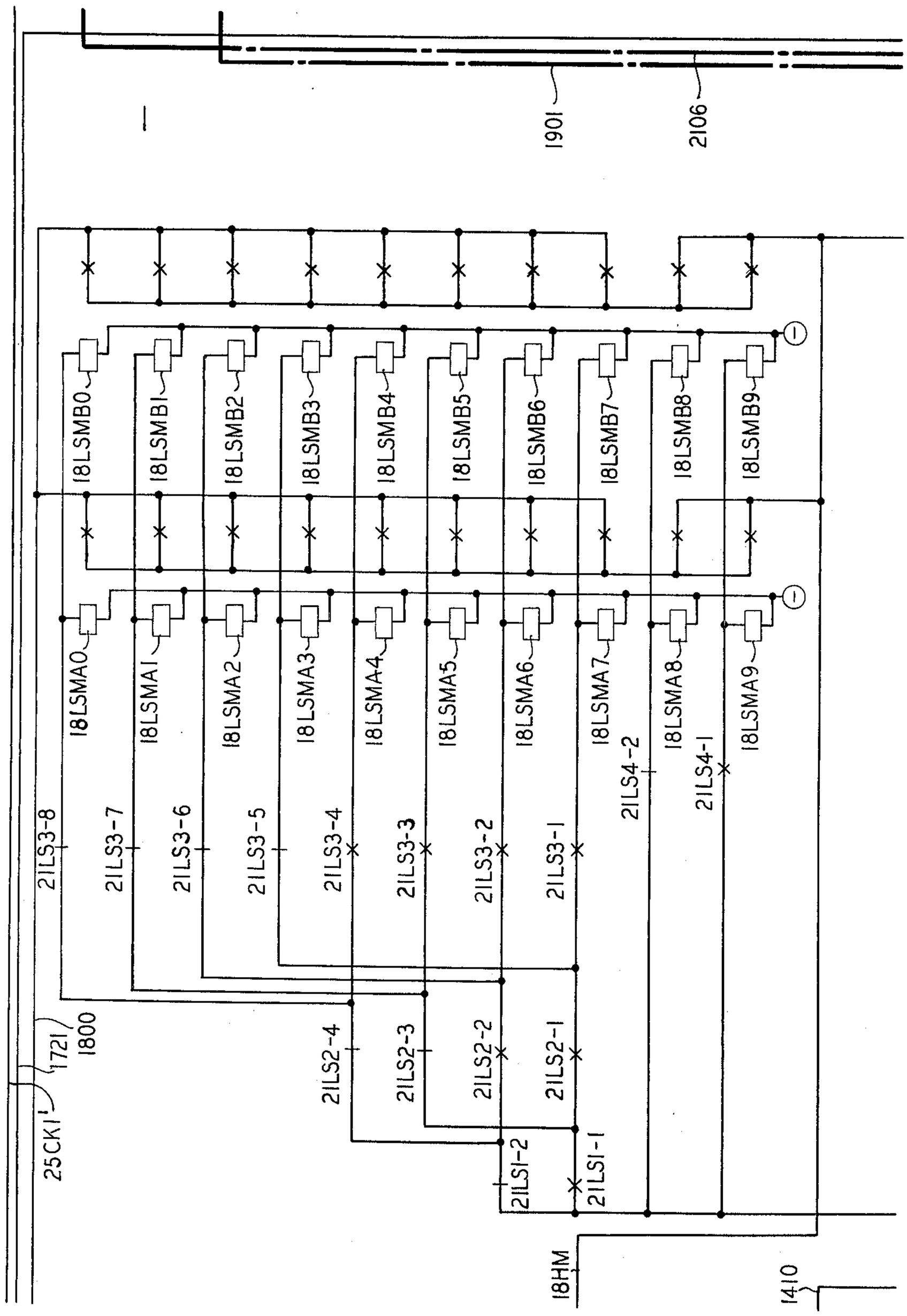
1901
2106
18LSMB0
18LSMB1
18LSMB2
18LSMB3
18LSMB4
18LSMB5
18LSMB6
18LSMB7
18LSMB8
18LSMB9
18LSMA0
18LSMA1
18LSMA2
18LSMA3
18LSMA4
18LSMA5
18LSMA6
18LSMA7
18LSMA8
18LSMA9
21LS3-8
21LS3-7
21LS3-6
21LS3-5
21LS3-4
21LS3-3
21LS3-2
21LS3-1
21LS4-2
21LS4-1
21LS2-4
21LS2-3
21LS2-2
21LS2-1
21LS1-2
21LS1-1
1721
1800
25CK1
18HM
1410

FIG. 18

UNIVERSAL LINE CONCENTRATOR

Filed Dec. 31, 1962 69 Sheets-Sheet 22

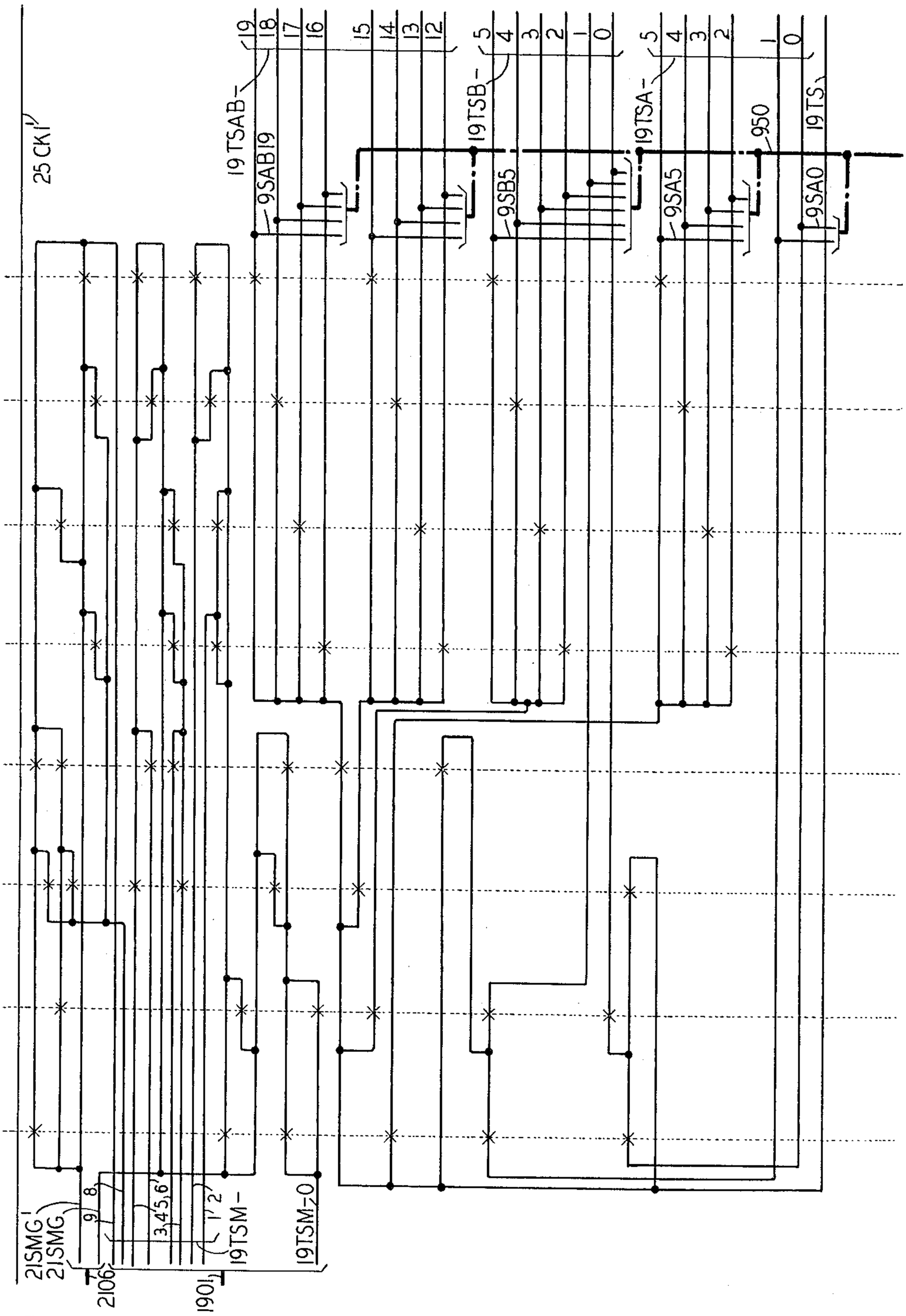

FIG. 19

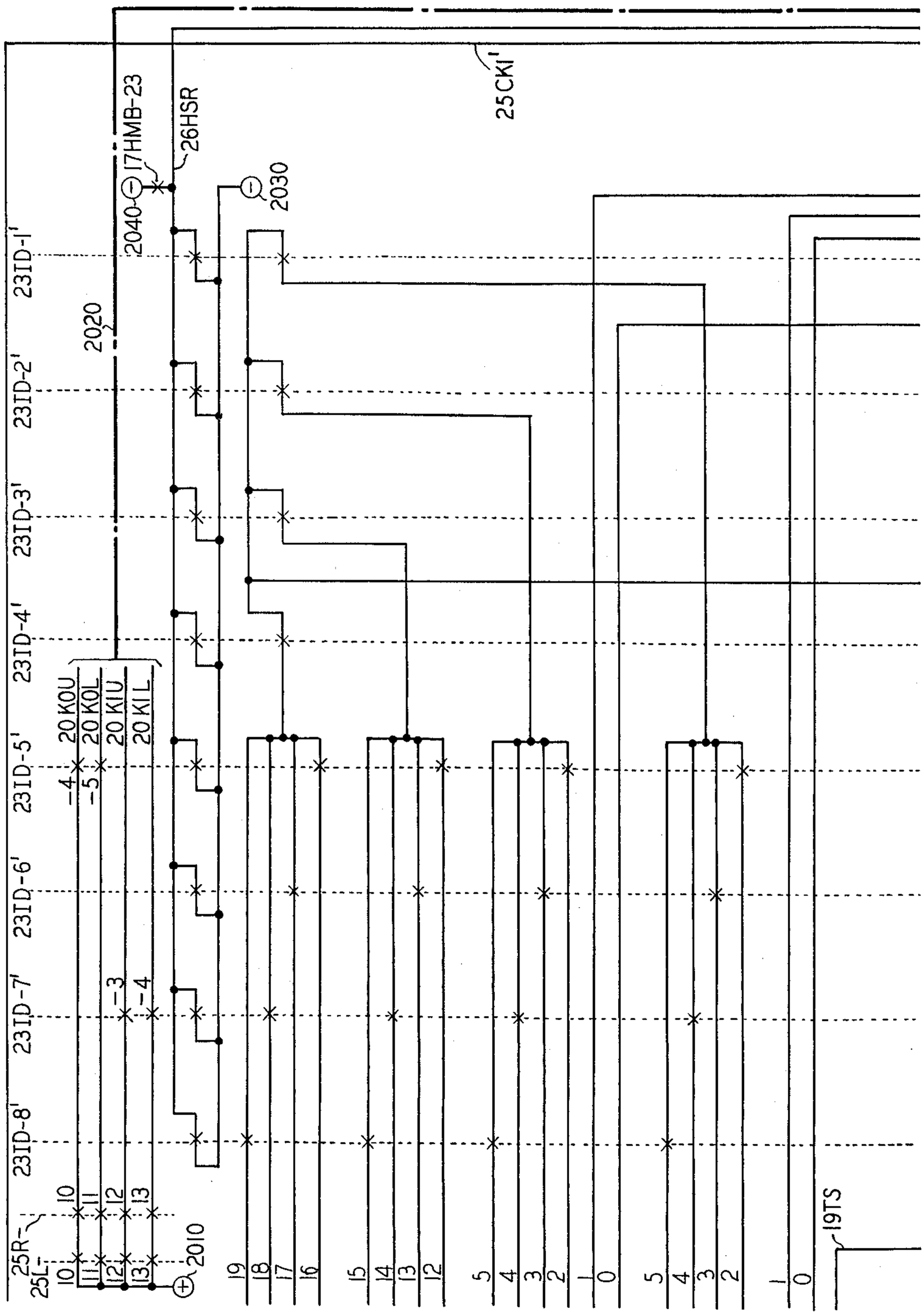
25CKI'
26HSR
17HMB-23
2040
2030
2020
23ID-1'
23ID-2'
23ID-3'
23ID-4'
23ID-5'
23ID-6'
23ID-7'
23ID-8'
20KOU
20KOL
20KIU
20KIL
-4
-5
-3
-4
25R-
25L-
10
11
12
13
2010
19
18
17
16
15
14
13
12
5
4
3
2
1
0
5
4
3
2
1
0
19TS

FIG. 20

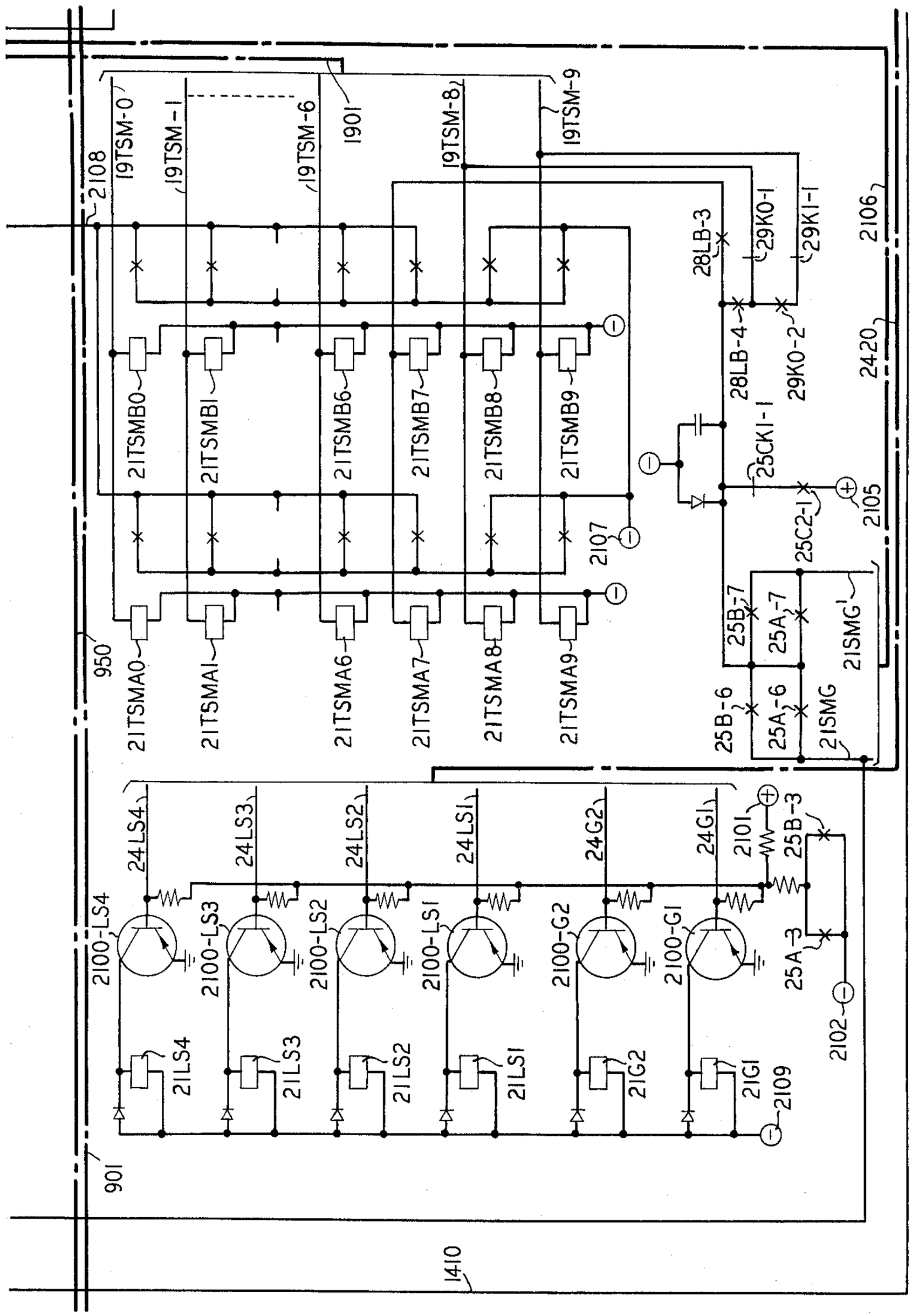
19TSM-0
19TSM-1
19TSM-6
1901
19TSM-8
19TSM-9
2108
28LB-3
29K0-1
29K1-1
2106
28LB-4
29K0-2
2420
21TSMB0
21TSMB1
21TSMB6
21TSMB7
21TSMB8
21TSMB9
25CK1-1
2107
25C2-1
2105
950
21TSMA0
21TSMA1
21TSMA6
21TSMA7
21TSMA8
21TSMA9
25B-7
25A-7
21SMG'
25B-6
25A-6
21SMG
24LS4
24LS3
24LS2
24LS1
24G2
24G1
2101
25B-3
2100-LS4
2100-LS3
2100-LS2
2100-LS1
2100-G2
2100-G1
25A-3
2102
21LS4
21LS3
21LS2
21LS1
21G2
21G1
2109
901
1410

FIG. 21

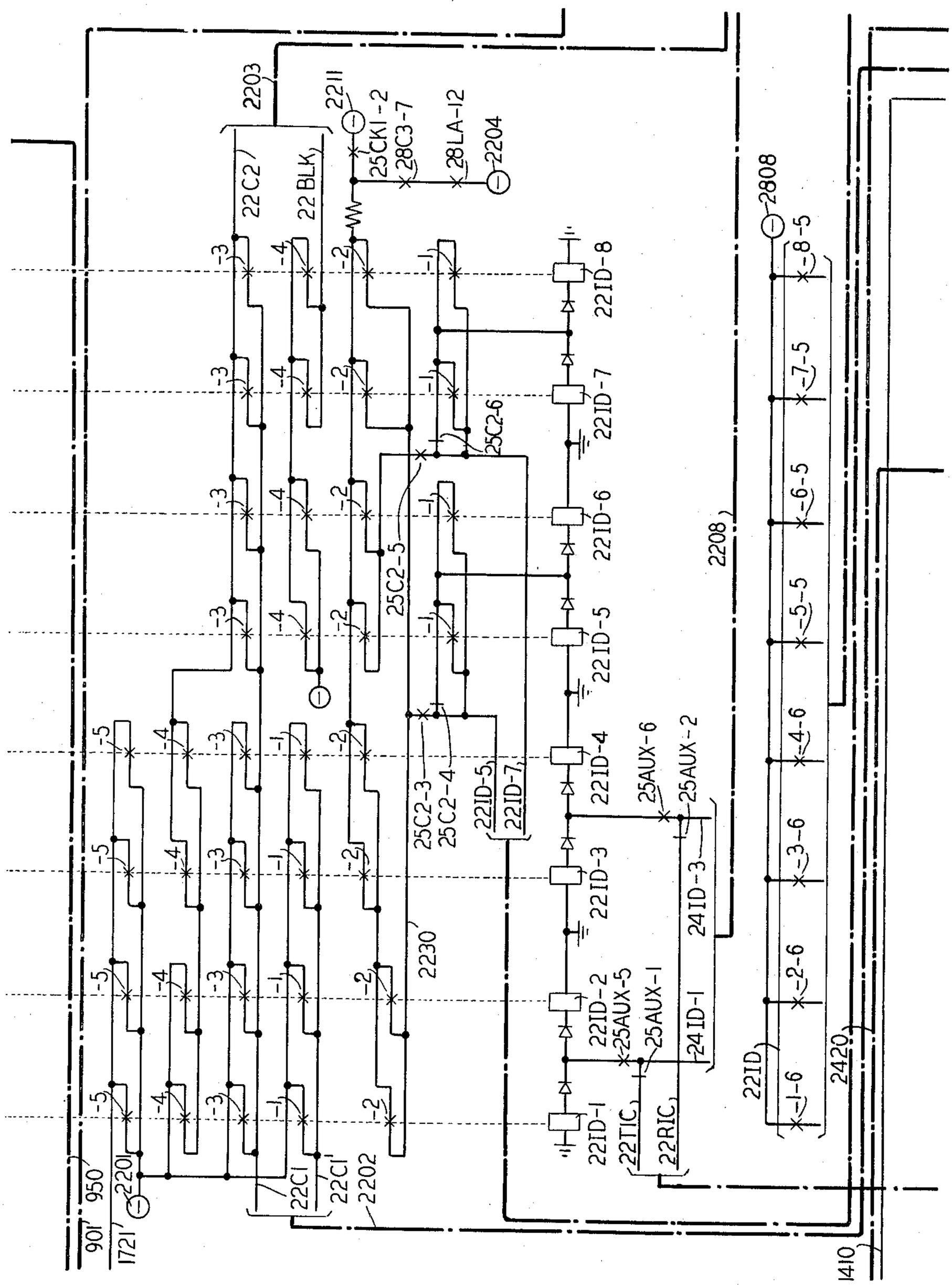
2203
2211
25CKI-2
28C3-7
28LA-12
2204
22C2
22BLK
2808
-8-5
-7-5
-6-5
-5-5
-4-6
-3-6
-2-6
-1-6
22ID
2420
2208
22ID-8
22ID-7
22ID-6
22ID-5
22ID-4
22ID-3
22ID-2
22ID-1
25C2-6
25C2-5
25C2-3
25C2-4
22ID-5
22ID-7
25AUX-6
25AUX-2
24ID-3
25AUX-5
25AUX-1
24ID-1
22TIC
22RIC
2230
950
901
1721
2201
22CI
22CI'
2202
1410

FIG. 22

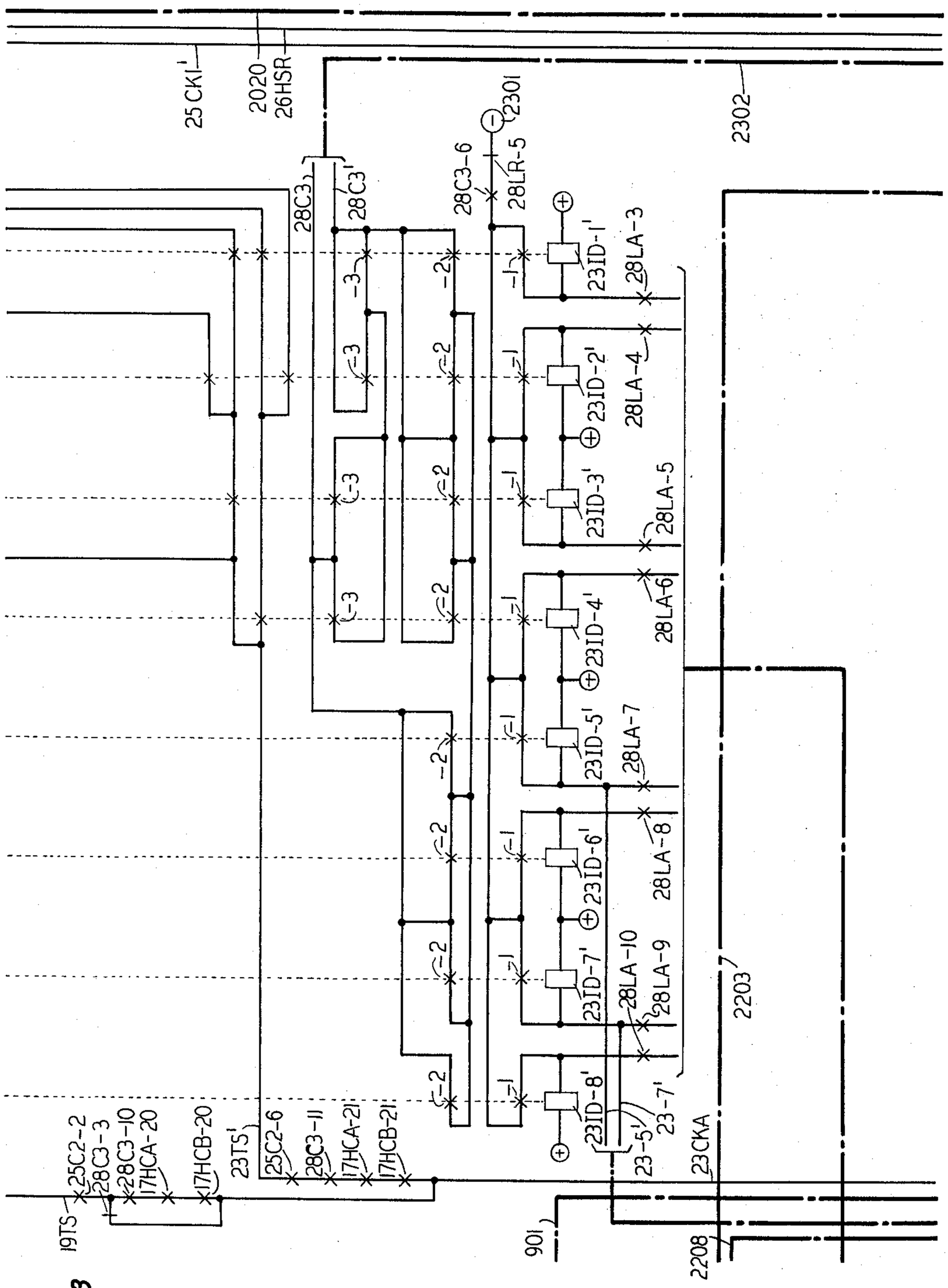
25CKI
2020
26HSR
2301
2302
28C3
28C3'
28C3-6
28LR-5
23ID-1'
28LA-3
23ID-2'
28LA-4
23ID-3'
28LA-5
23ID-4'
28LA-6
23ID-5'
28LA-7
23ID-6'
28LA-8
23ID-7'
28LA-10
28LA-9
23ID-8'
23-7'
23-5'
2203
23CKA
2208
901
19TS
25C2-2
28C3-3
28C3-10
17HCA-20
17HCB-20
23TS'
25C2-6
28C3-11
17HCA-21
17HCB-21

FIG. 23

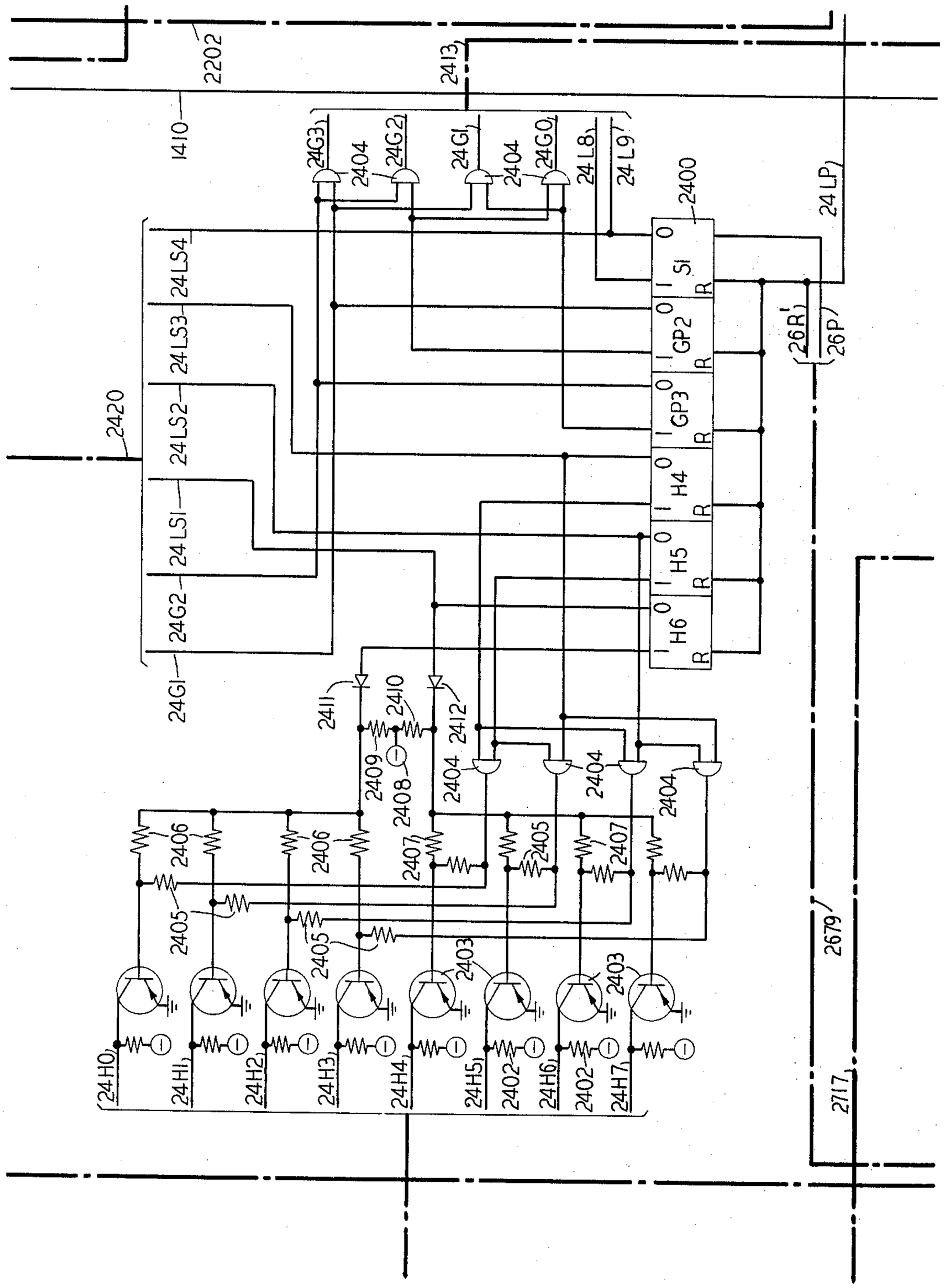
2202
2413
1410
24G3
2404
24G2
24G1
2404
24G0
24L8
24L9
2400
24LP
24LS4
24LS3
24LS2
24LS1
24G2
24G1
2420
S1
GP2
GP3
H4
H5
H6
26R'
26P
2411
2410
2412
2409
2408
2404
2406
2405
2407
2403
24H0
24H1
24H2
24H3
24H4
24H5
2402
24H6
24H7
2679
2717

FIG. 24

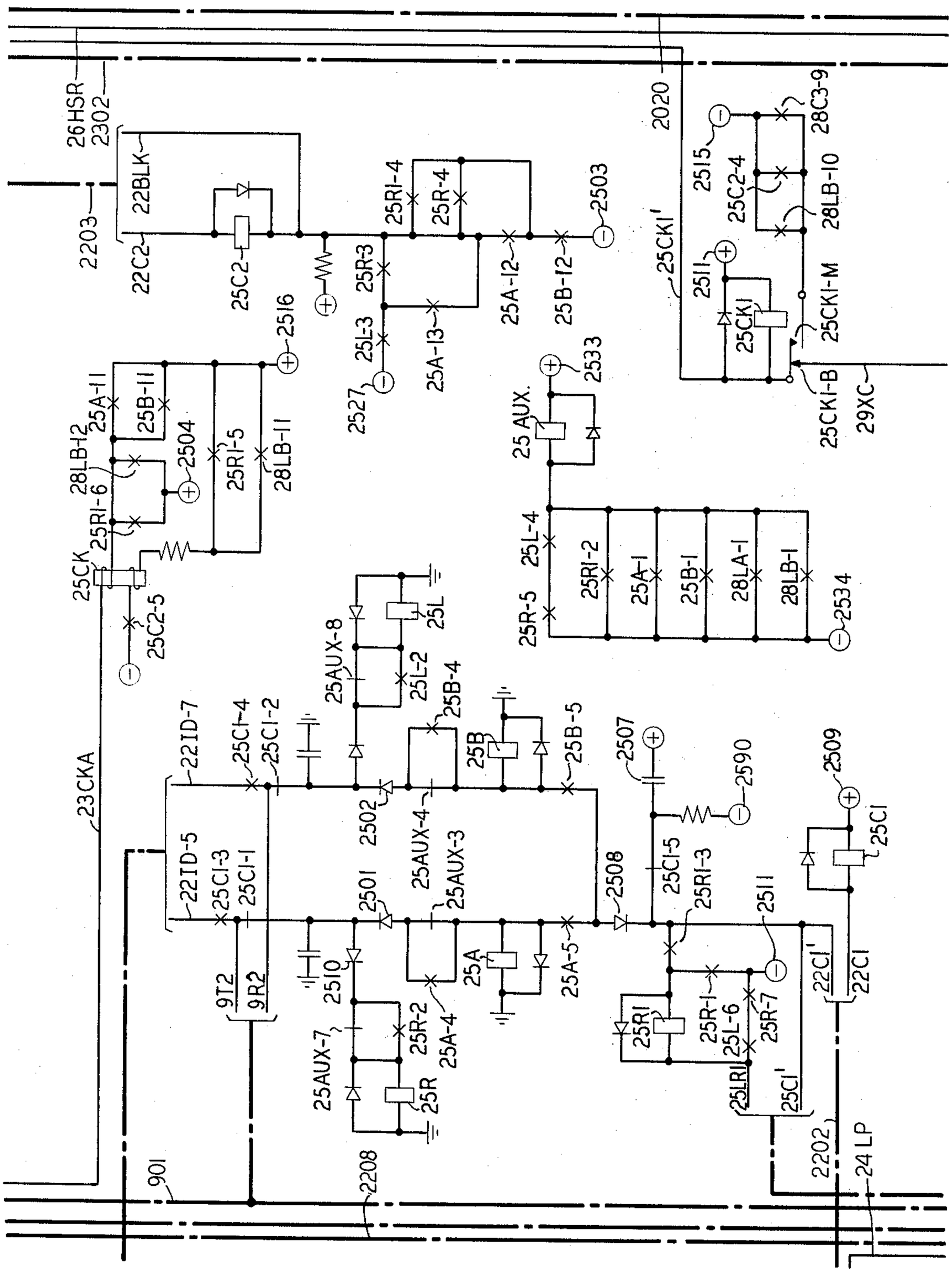
26HSR
2302
2203
22BLK
22C2
25C2
2516
25R1-4
25R-4
25R3
25L-3
2527
25A-13
25A-12
25B-12
2503
2020
2515
25C2-4
28C3-9
28LB-10
25CK1'
2511
25CK1
25CK1-M
25CK1-B
29XC
25A-11
25B-11
28LB-12
2504
25R1-5
28LB-11
25R1-6
25CK
25C2-5
2533
25 AUX.
25L-4
25R-5
25R1-2
25A-1
25B-1
28LA-1
28LB-1
2534
25AUX-8
25L
25L-2
25B-4
25B
25B-5
2507
2590
2509
25CI
23CKA
22ID-7
25CI-4
25CI-2
2502
25AUX-4
25AUX-3
22ID-5
25CI-3
25CI-1
2501
2508
25CI-5
25RI-3
2511
9T2
9R2
2510
25A
25A-5
22CI'
22CI
25AUX-7
25R-2
25A-4
25R
25R1
25R-1
25L-6
25R-7
25LR1
25CI'
2202
24 LP
901
2208

FIG. 25

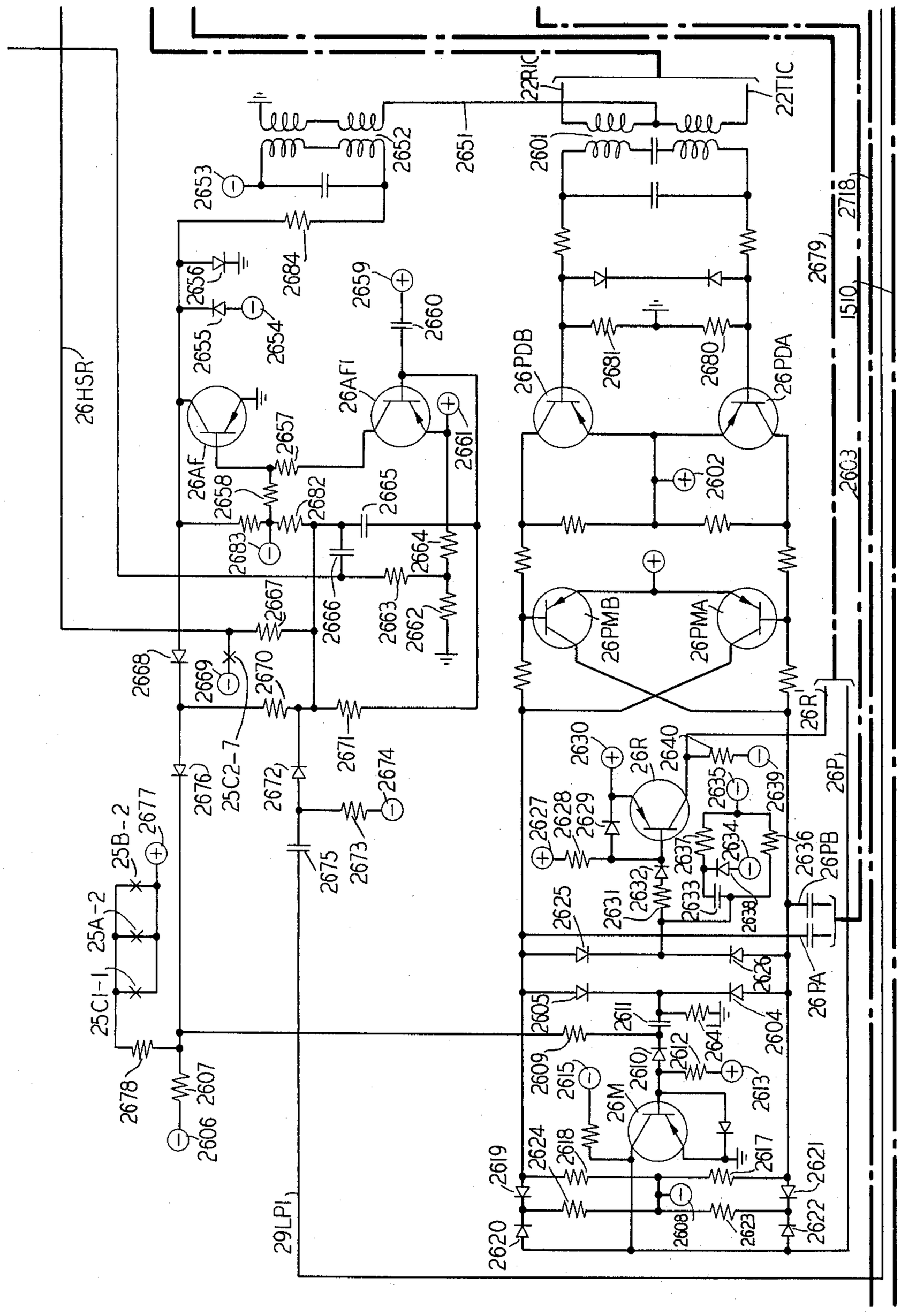
26HSR
26AF
26AF1
26PDB
26PDA
26PMB
26PMA
26R
26PB
26PA
26M
25C1-1
25A-2
25B-2
25C2-7
29LP1
22RIC
22TIC
2601
2602
2603
2604
2605
2606
2607
2608
2609
2610
2611
2612
2613
2614
2615
2617
2618
2619
2620
2621
2622
2623
2624
2625
2626
2627
2628
2629
2630
2631
2632
2633
2634
2635
2636
2637
2638
2639
2640
2651
2652
2653
2654
2655
2656
2657
2658
2659
2660
2661
2662
2663
2664
2665
2666
2667
2668
2669
2670
2671
2672
2673
2674
2675
2676
2677
2678
2679
2680
2681
2682
2683
2684
1510
2718
26P1
26R'

FIG. 26

UNIVERSAL LINE CONCENTRATOR

Filed Dec. 31, 1962 69 Sheets-Sheet 30

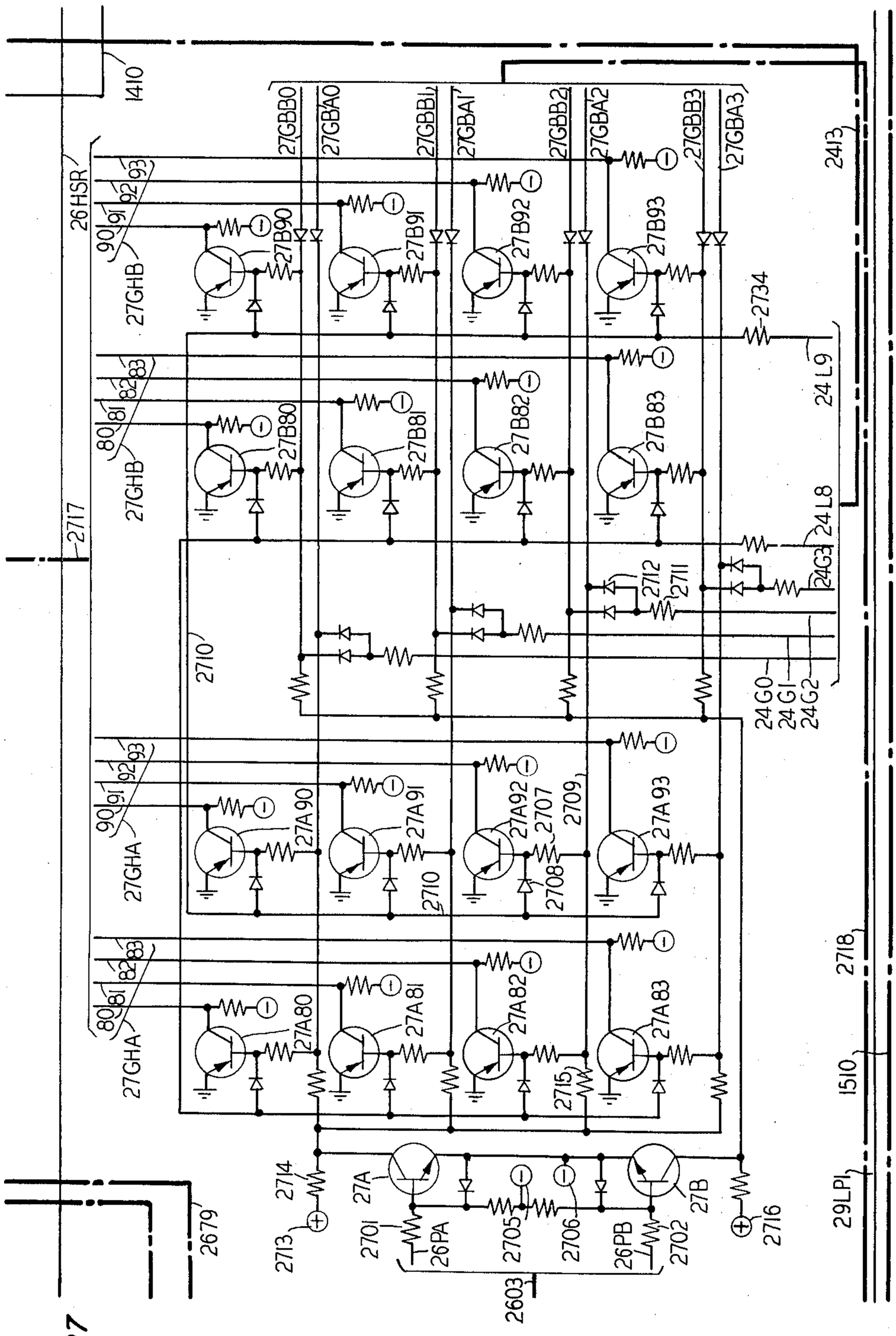

FIG. 27

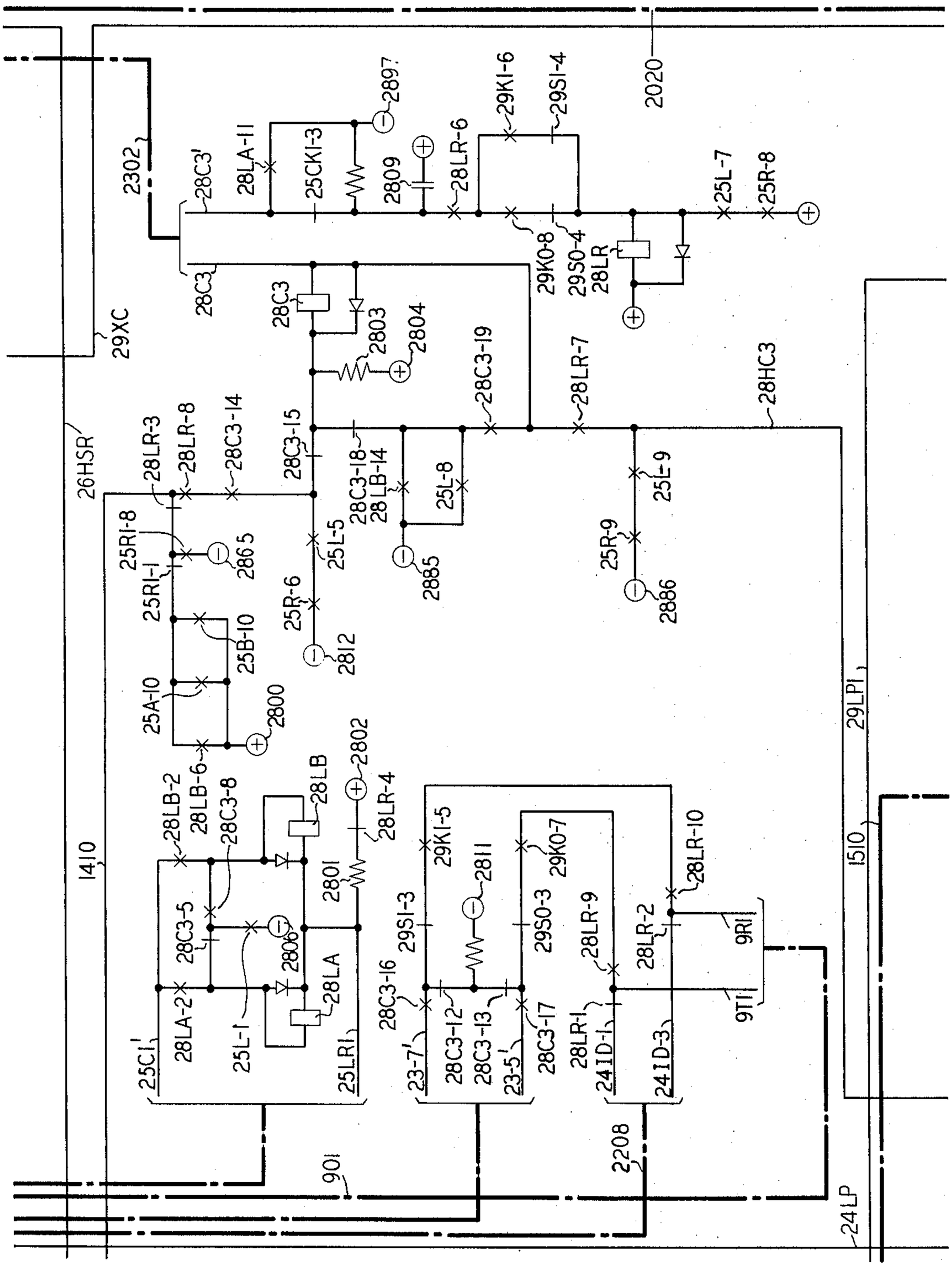
2897
29KI-6
29SI-4
2020
2302
28C3'
28LA-11
25CKI-3
2809
28LR-6
25L-7
25R-8
29KO-8
29SO-4
28LR
28C3
28C3
2803
2804
29XC
28C3-19
28LR-7
28HC3
26HSR
28LR-3
28LR-8
28C3-14
28C3-15
28C3-18
28LB-14
25L-8
25L-9
25RI-8
25RI-1
2865
25L-5
2885
25R-9
2886
25R-6
2812
25B-10
25A-10
2800
29LPI
2802
28LB-2
28LB-6
28C3-8
28LB
28LR-4
1410
28C3-5
2801
29KI-5
2811
29KO-7
28LR-10
1510
29SI-3
2806
28LA
29SO-3
28LR-9
28LR-2
9RI
28C3-16
28LA-2
25L-1
28C3-12
28C3-13
28C3-17
28LR-1
9TI
25CI
25LRI
23-7
23-5
24ID-1
24ID-3
2208
901
24LP

FIG. 28

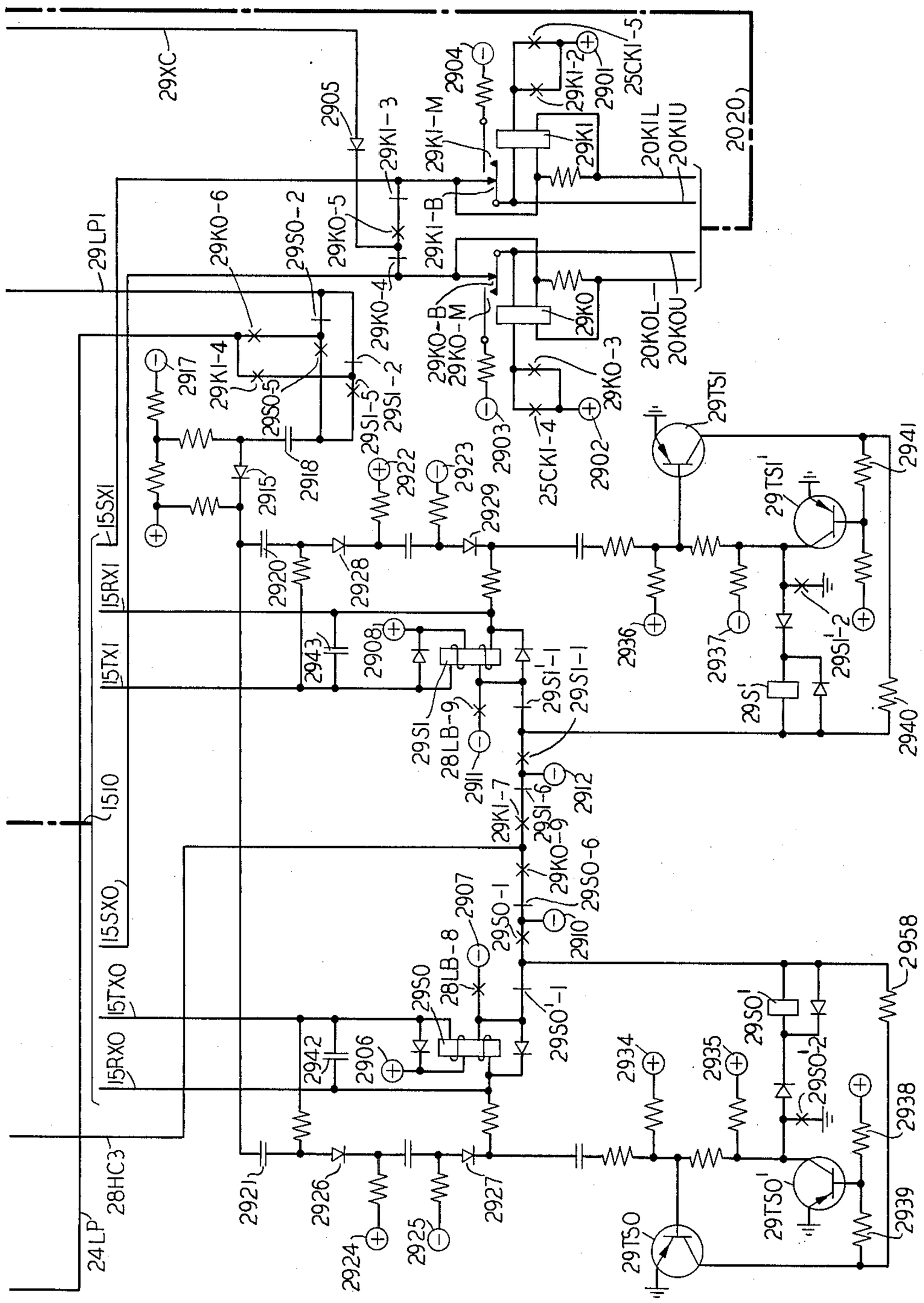
29XC
29LPI
15SXI
15RXI
15TXI
1510
15SXO
15TXO
15RXO
24LP
28HC3
2905
29KI-3
29KI-M
2904
29KI-2
2901
25CKI-5
29KI
20KIL
20KIU
2020
29KI-B
29KO-6
29SO-2
29KO-5
29KO-4
29KO-B
29KO-M
29KO
20KOL
20KOU
29KO-3
29KI-4
2917
29SO-5
29SI-2
29SI-5
2918
2915
2922
2923
2903
25CKI-4
2902
29TSI
2941
29TSI'
2929
2920
2928
2943
2908
29SI
28LB-9
2911
29SI'-1
29SI-1
2936
2937
29SI'-2
29S'
2940
29KI-7
29SI-6
2912
29KO-6
29SO-6
2907
29SO-1
2910
2958
29SO
28LB-8
29SO'-1
29SO'
2934
2935
29SO'-2
2938
2942
2906
2921
2926
2924
2925
2927
29TSO
29TSO'
2939

FIG. 29

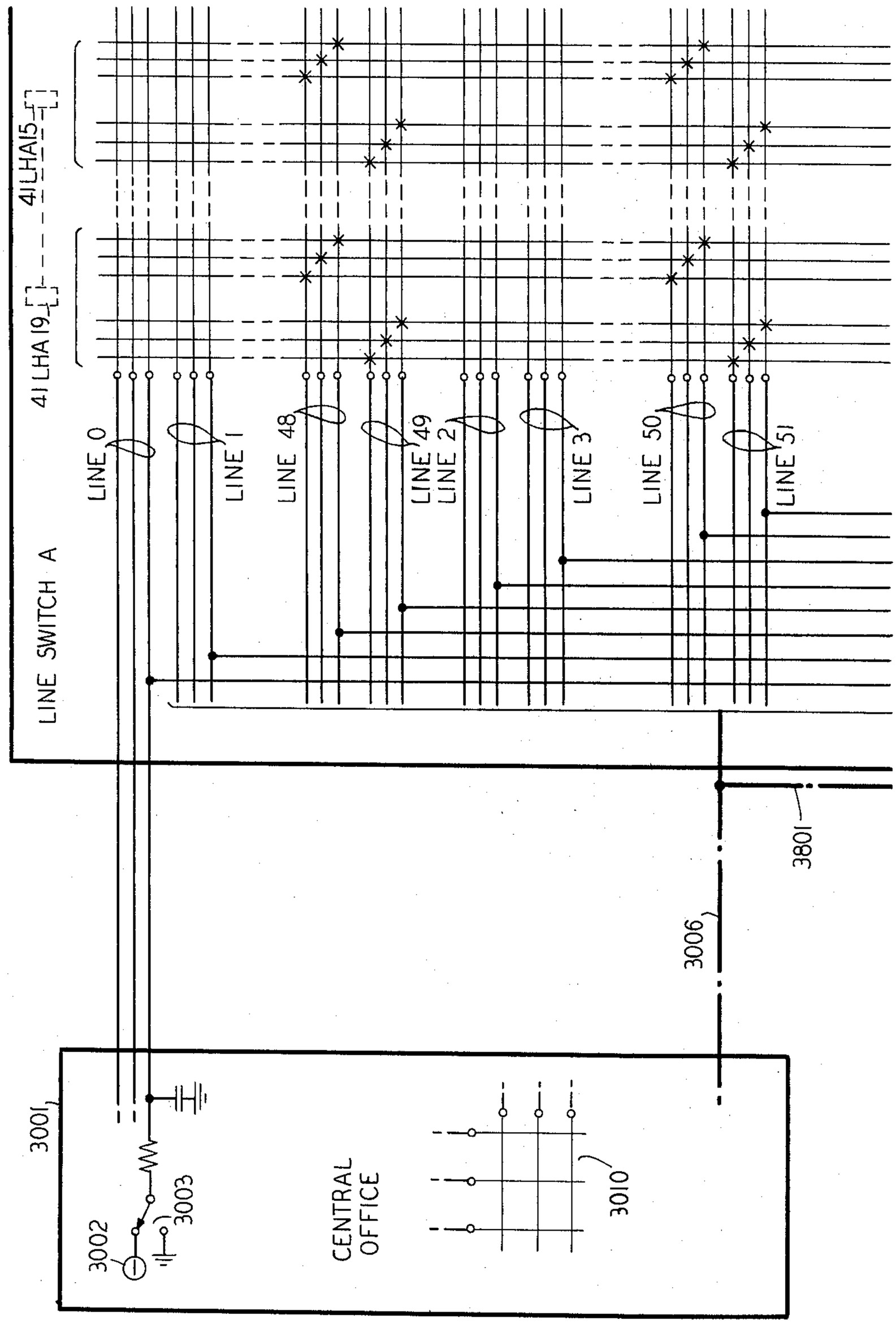
41LHA15
41LHA19
LINE SWITCH A
LINE 0
LINE 1
LINE 48
LINE 49
LINE 2
LINE 3
LINE 50
LINE 51
3801
3006
3001
3002
3003
CENTRAL OFFICE
3010

FIG. 30

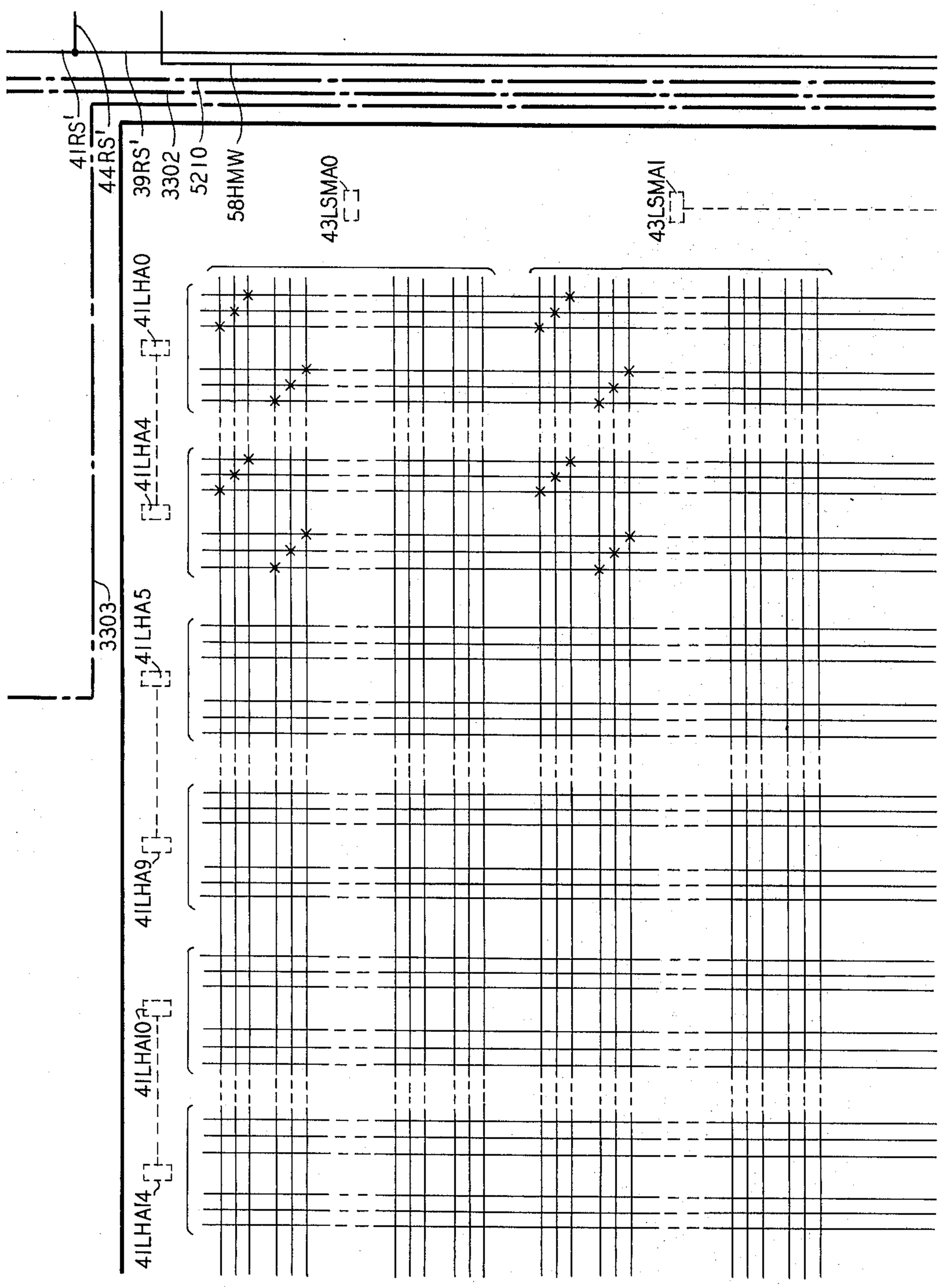
41RS'
44RS'
39RS'
3302
5210
58HMW
43LSMA0
43LSMA1
41LHA0
41LHA4
41LHA5
3303
41LHA9
41LHA10
41LHA14

FIG. 31

UNIVERSAL LINE CONCENTRATOR

Filed Dec. 31, 1962 69 Sheets-Sheet 35

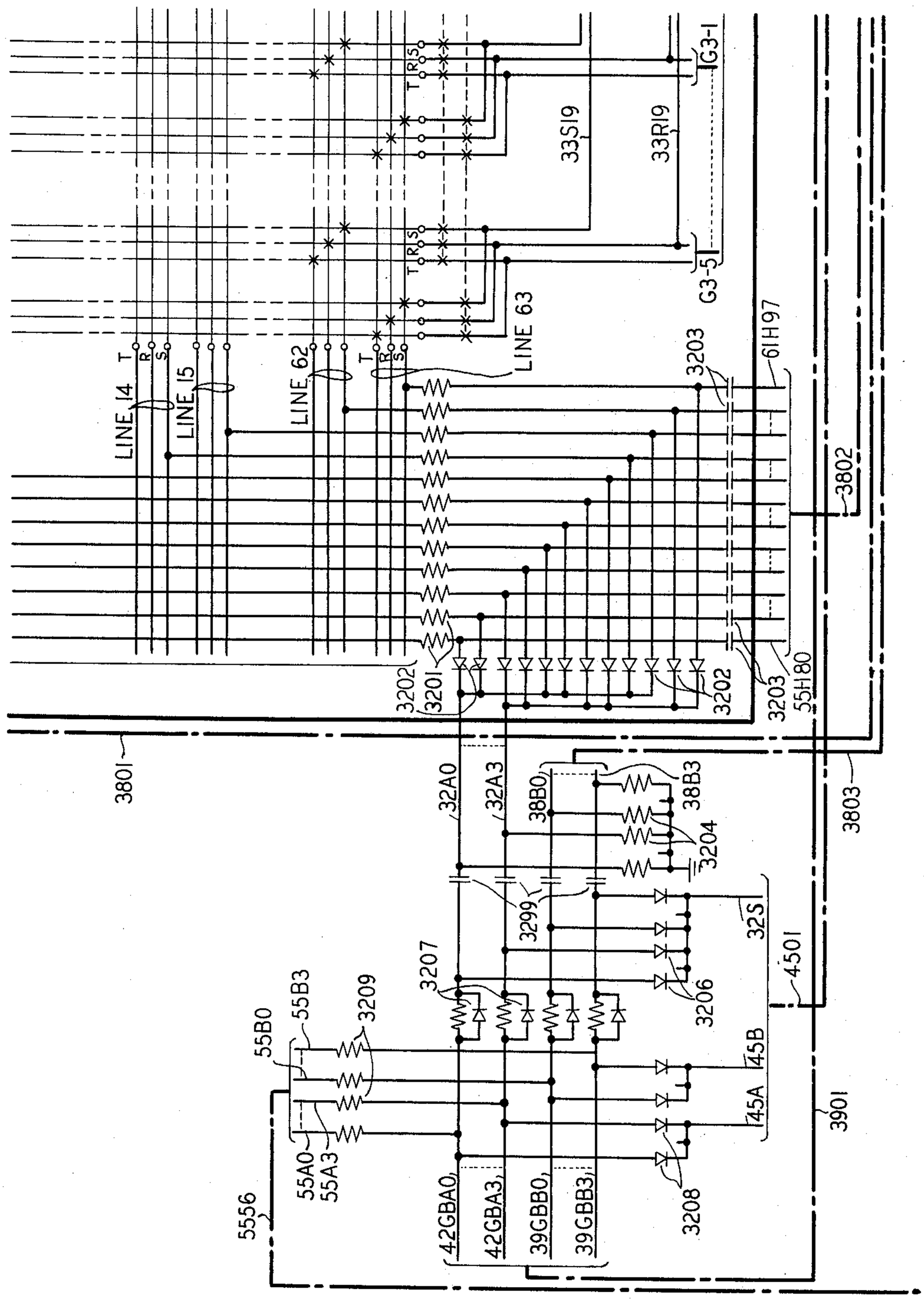

FIG. 32

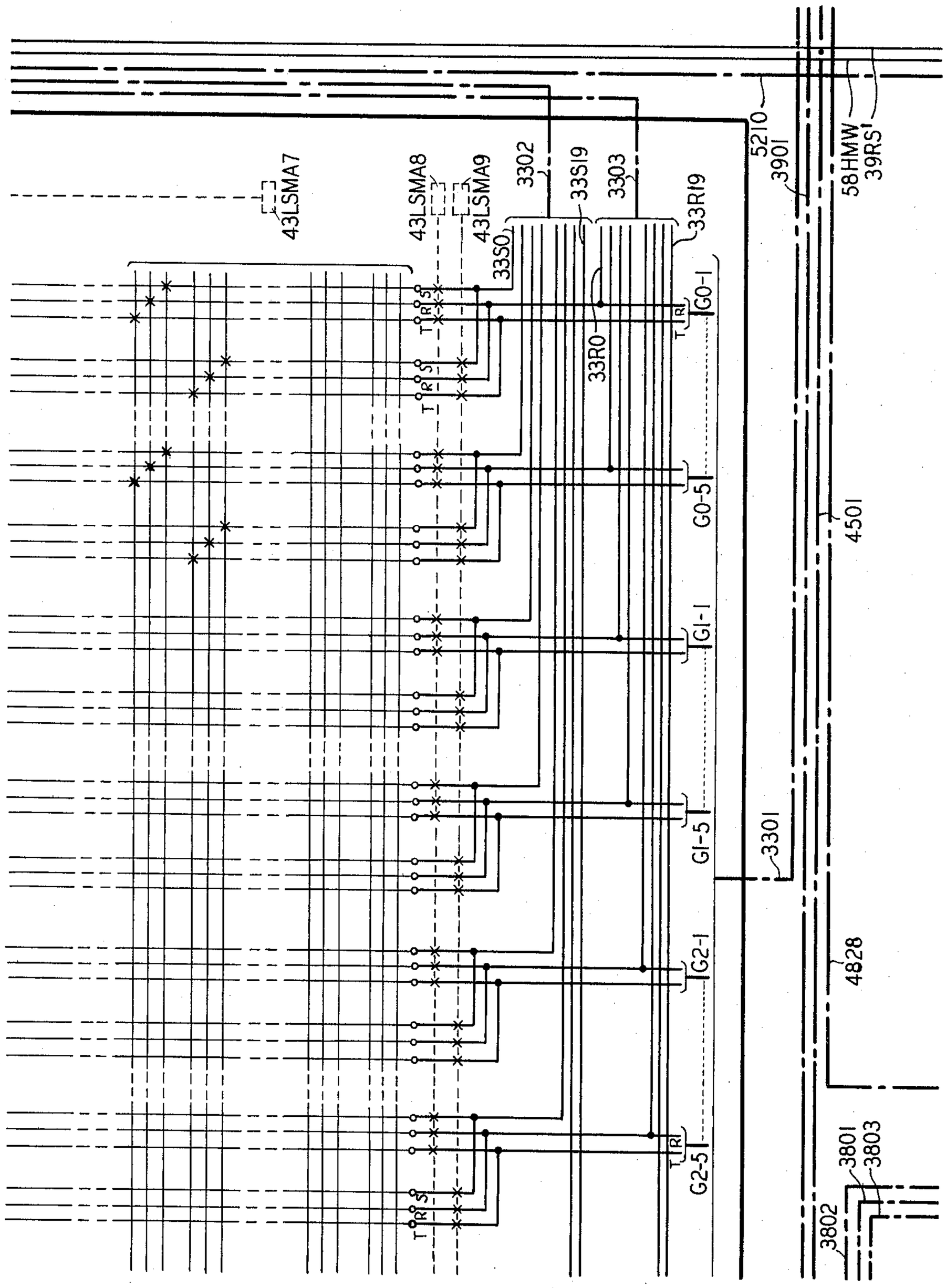
43LSMA7
43LSMA8
43LSMA9
3302
33S19
3303
33R19
5210
3901
58HMW
39RS'
33S0
33R0
G0-1
G0-5
G1-1
G1-5
G2-1
G2-5
4501
3301
4828
3801
3803
3802

FIG. 33

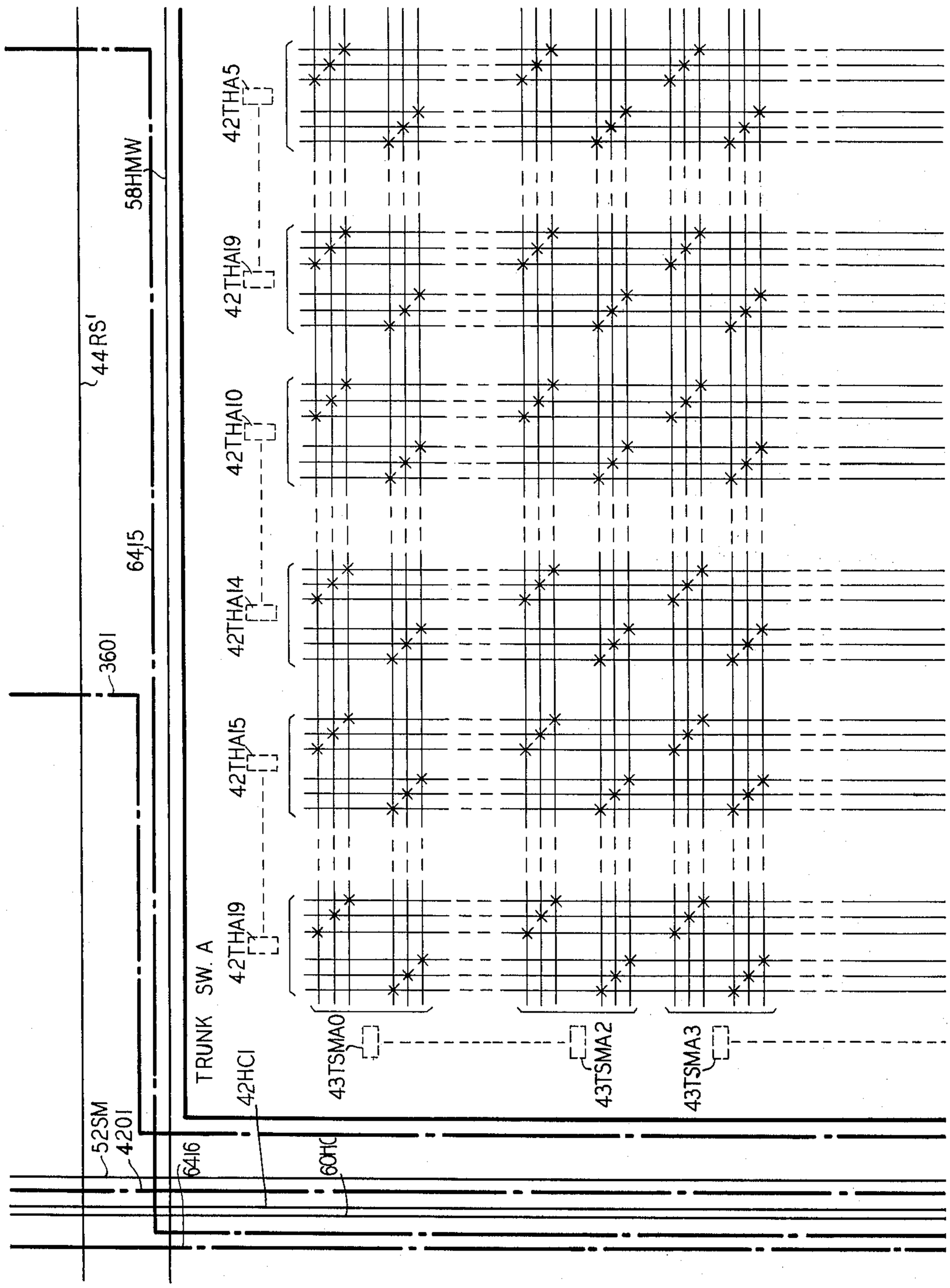
42THA5
58HMW
42THA19
44RS'
42THA10
6415
42THA14
3601
42THA15
42THA19
TRUNK SW. A
43TSMA0
43TSMA2
43TSMA3
42HCI
52SM
4201
6416
60HC

FIG. 34

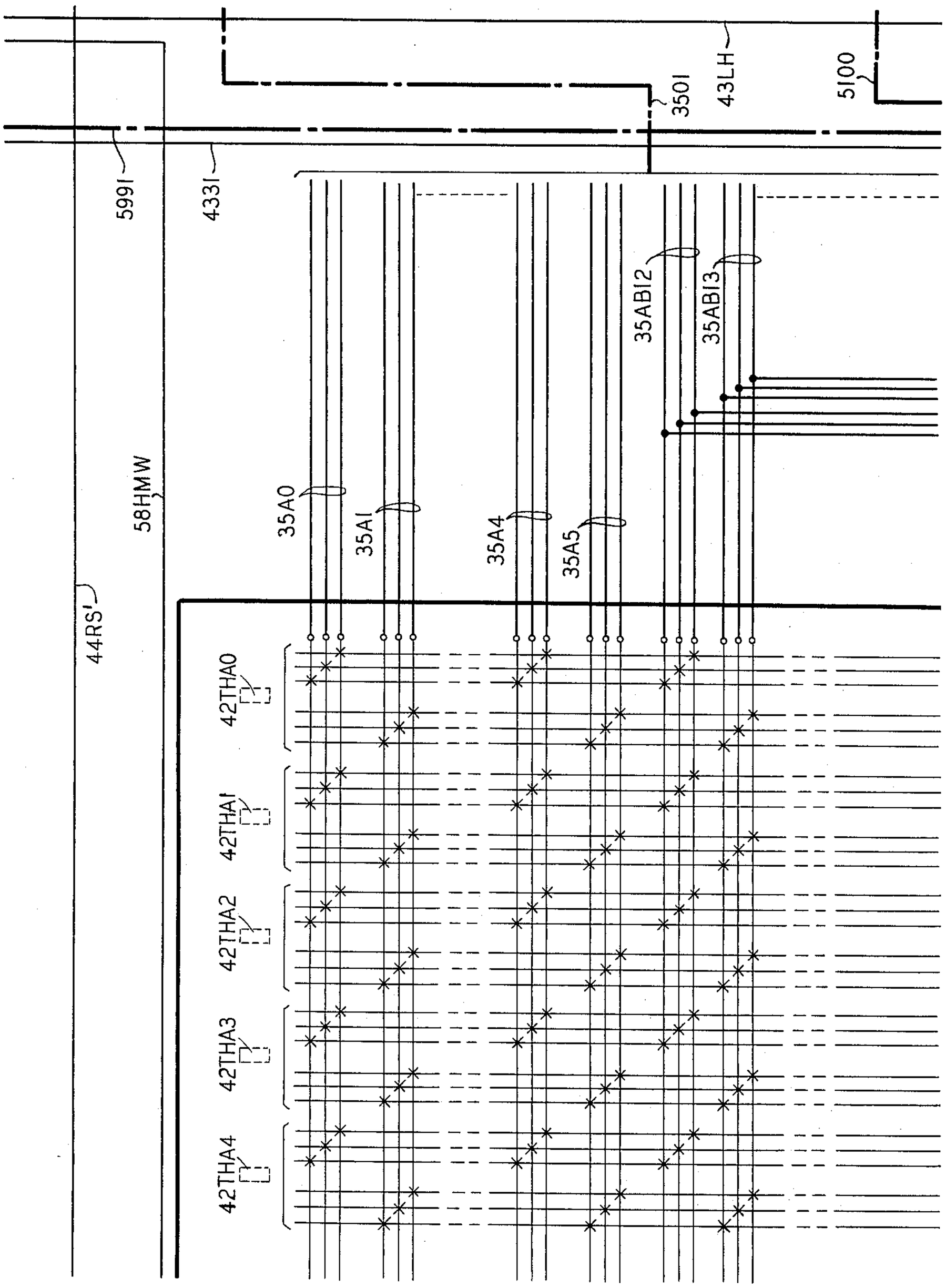
3501
43LH
5100
5991
4331
35AB12
35AB13
58HMW
35A0
35A1
35A4
35A5
44RS'
42THA0
42THA1
42THA2
42THA3
42THA4

FIG. 35

UNIVERSAL LINE CONCENTRATOR

Filed Dec. 31, 1962 69 Sheets-Sheet 39

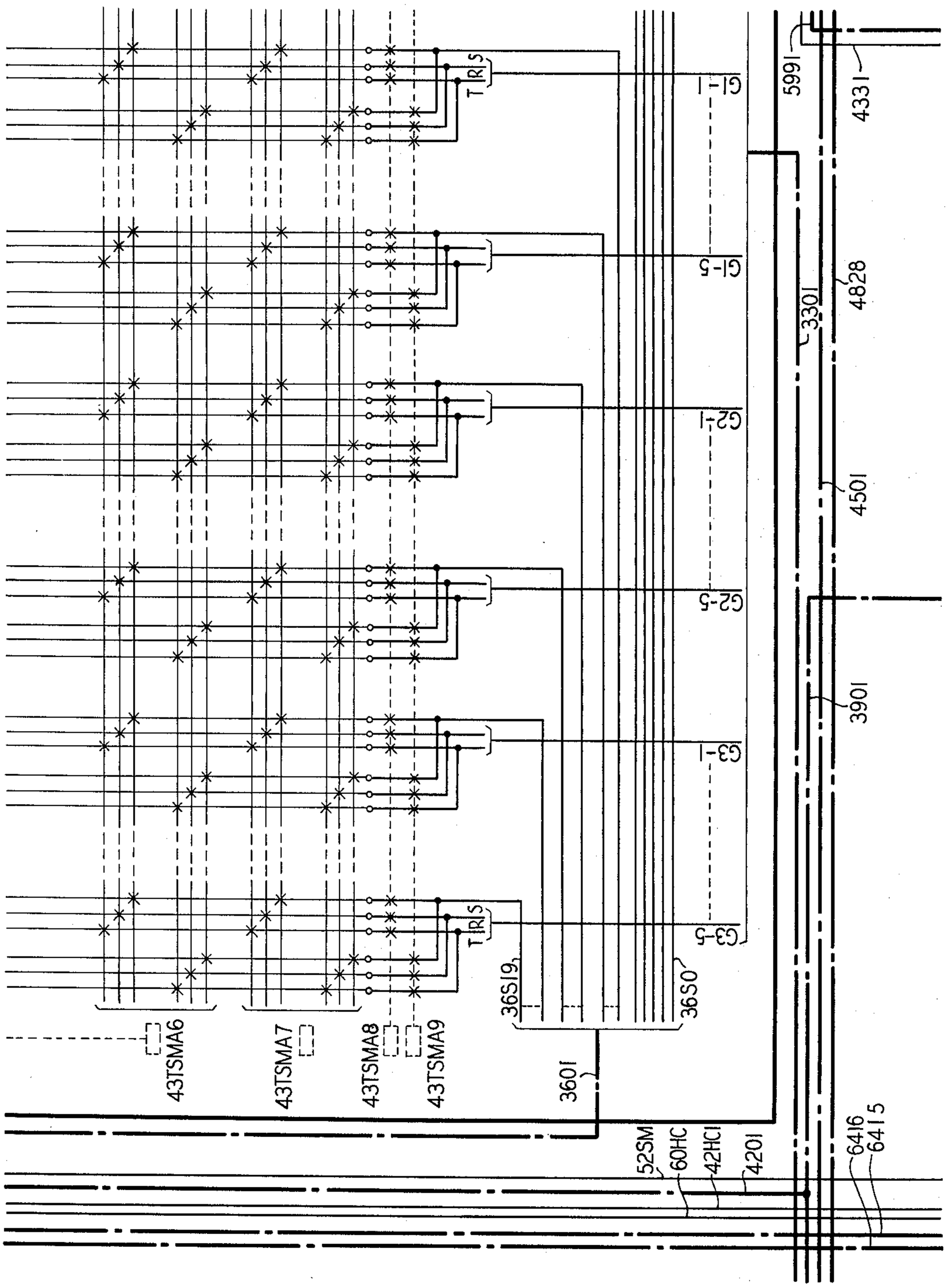

FIG. 36

UNIVERSAL LINE CONCENTRATOR

Filed Dec. 31, 1962 69 Sheets-Sheet 40

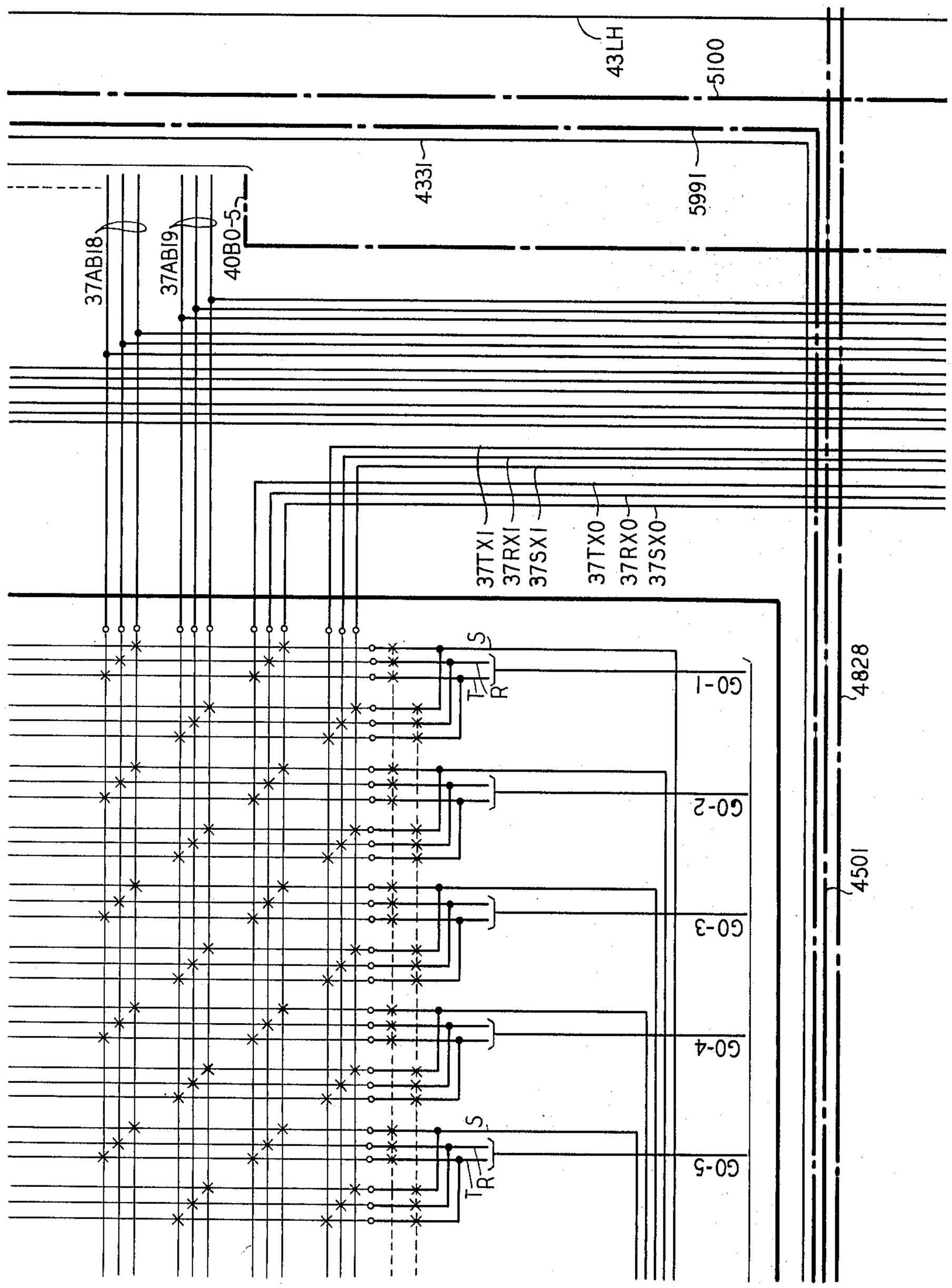

FIG. 37

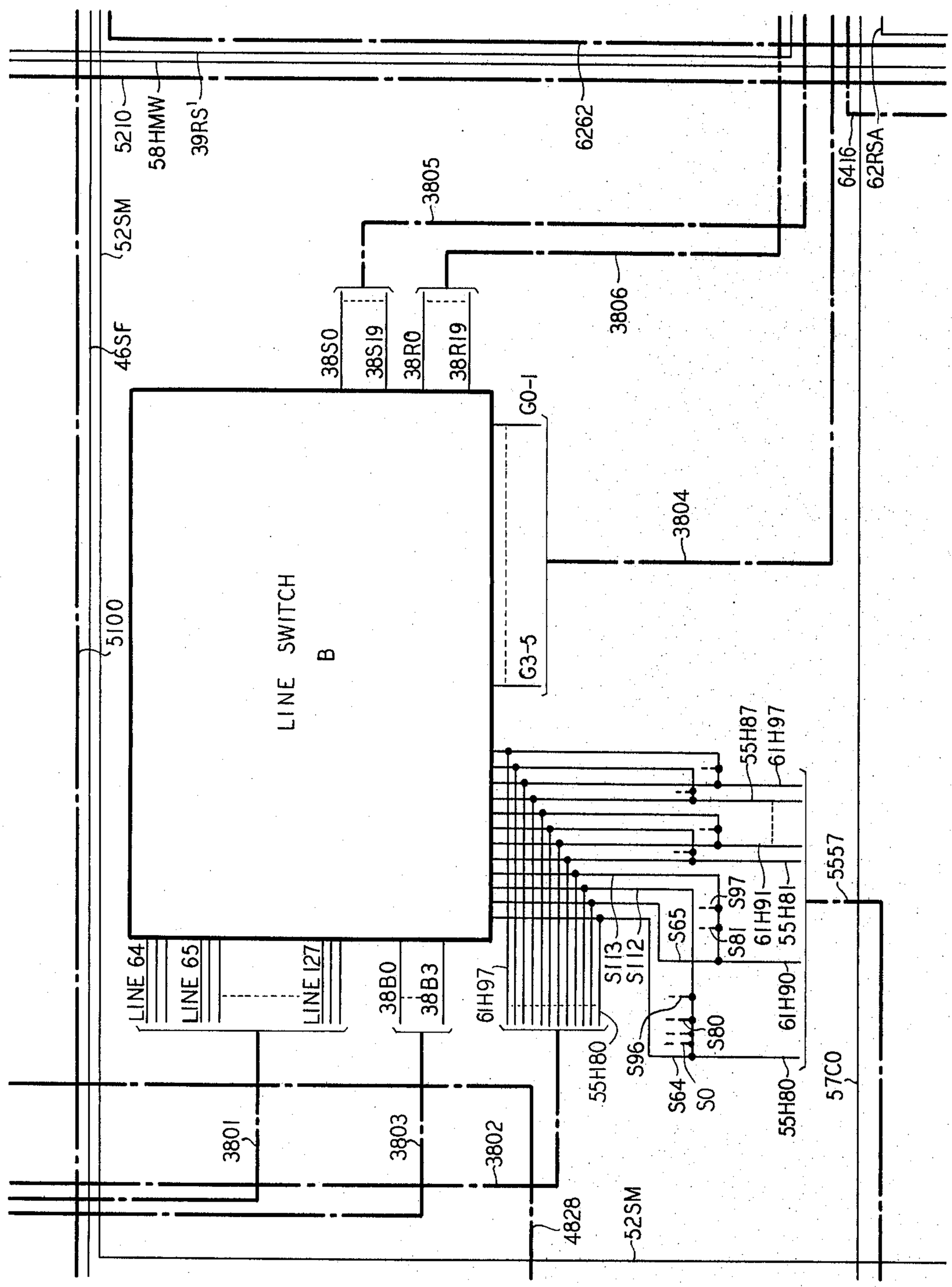
5210
58HMW
39RS'
6262
6416
62RSA
3805
52SM
3806
46SF
38S0
38S19
38R0
38R19
G0-1
3804
5100
LINE SWITCH
B
G3-5
55H87
61H97
5557
S97
61H91
55H81
S65
S81
S113
S112
LINE 64
LINE 65
LINE 127
38B0
38B3
61H97
61H90
S96
S80
55H80
S64
S0
55H80
57C0
3801
3803
3802
4828
52SM

FIG. 38

UNIVERSAL LINE CONCENTRATOR

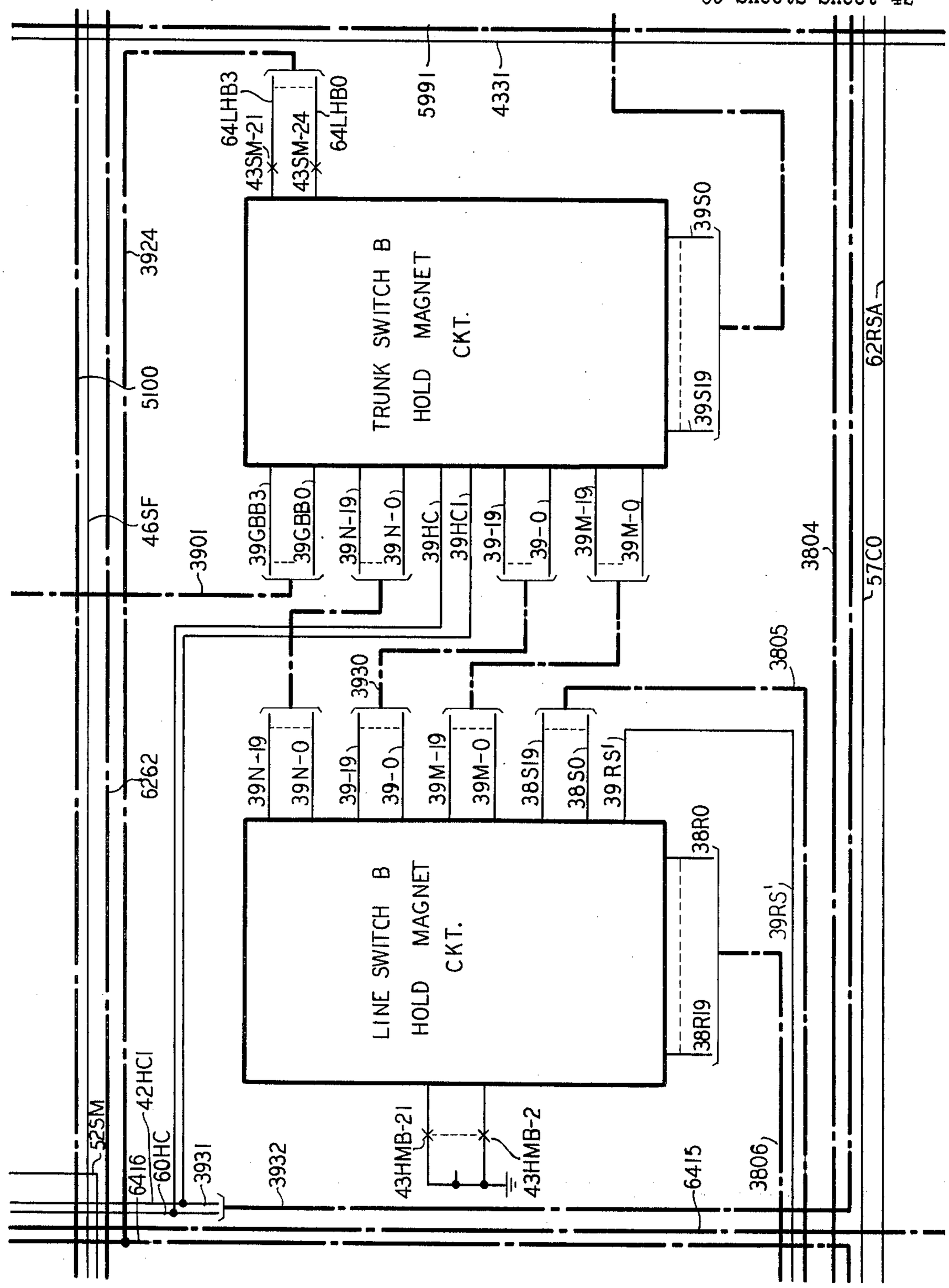

FIG. 39

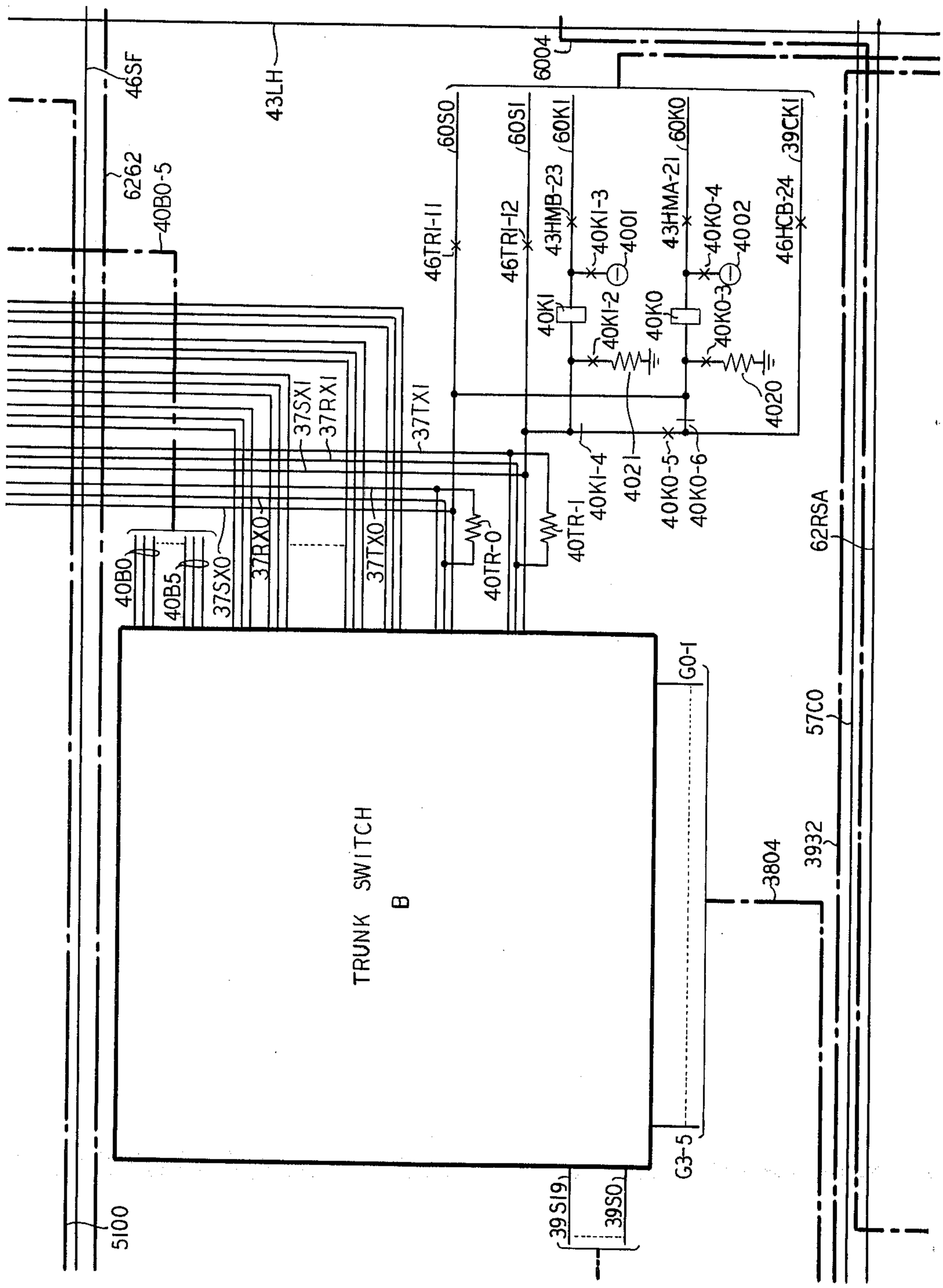
TRUNK SWITCH
B
46SF
43LH
6004
6262
40B0-5
60SO
60SI
60KI
60KO
39CKI
46TRI-11
46TRI-12
43HMB-23
43HMA-21
40KI-3
4001
40KO-4
4002
46HCB-24
40KI
40KI-2
40KO
40KO-3
4020
37TXI
37SXI
37RXI
40KI-4
4021
40KO-5
40KO-6
40TR-I
40TR-0
37TXO
37RXO
37SXO
40B5
40B0
62RSA
G0-I
57CO
3804
3932
G3-5
39SI9
39SO
5100

FIG. 40

UNIVERSAL LINE CONCENTRATOR

Filed Dec. 31, 1962 69 Sheets-Sheet 44

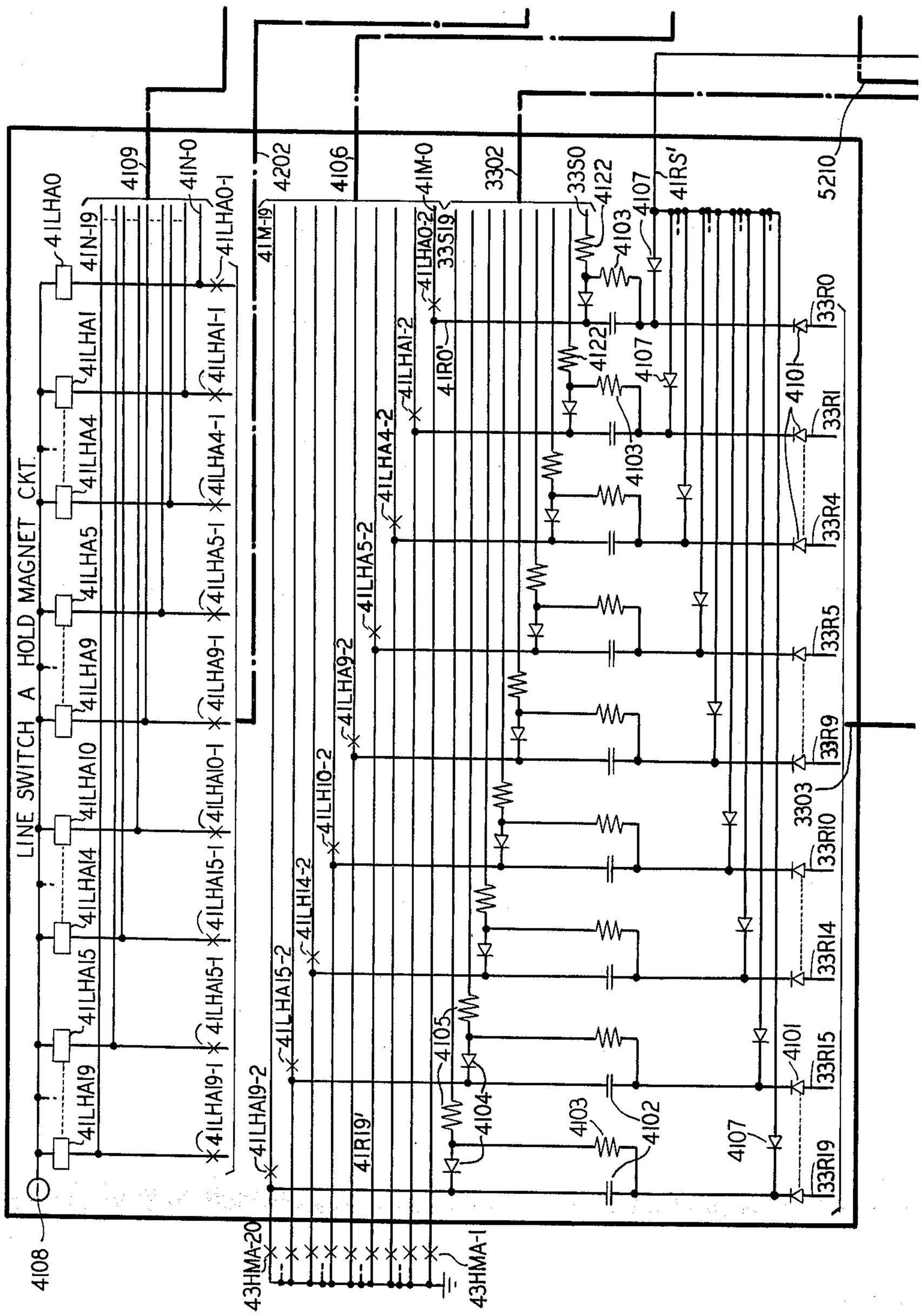

FIG. 41

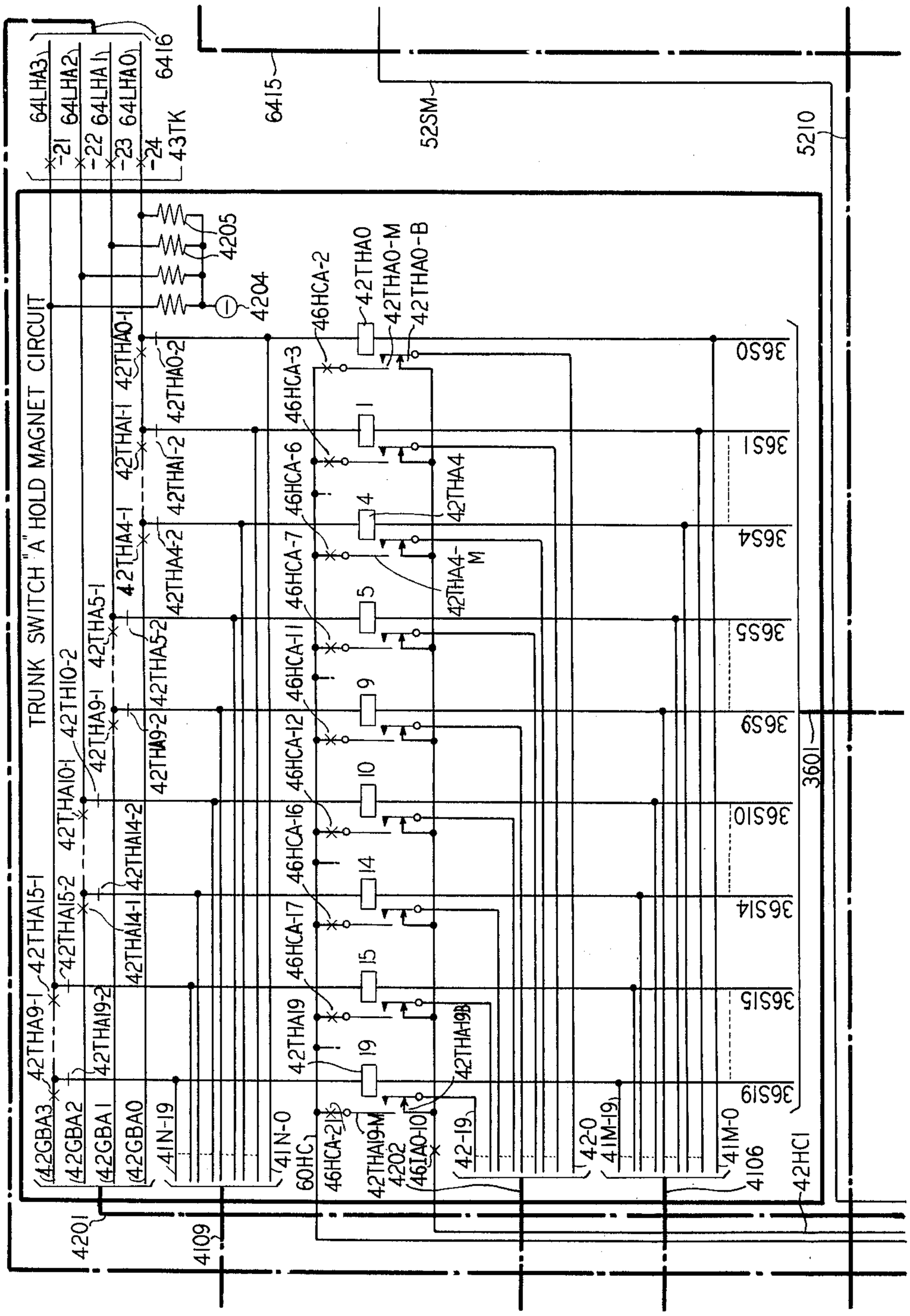
TRUNK SWITCH "A" HOLD MAGNET CIRCUIT
64LHA3
64LHA2
64LHA1
64LHA0
6416
6415
52SM
5210
43TK
4205
4204
42THA0
42THA0-M
42THA0-B
46HCA-2
46HCA-3
46HCA-6
46HCA-7
46HCA-11
46HCA-12
46HCA-16
46HCA-17
42THA4
42THA4-M
42THA19
42THA19-M
42THA19B
42GBA3
42GBA2
42GBA1
42GBA0
41N-19
41N-0
60HC
46HCA-21
4202
46IA0-10
42-19
42-0
41M-19
41M-0
4106
42HC1
4201
4109
3650
3651
3654
3655
3659
3601
3610
3614
3615
3619

FIG. 42

UNIVERSAL LINE CONCENTRATOR

Filed Dec. 31, 1962 69 Sheets-Sheet 46

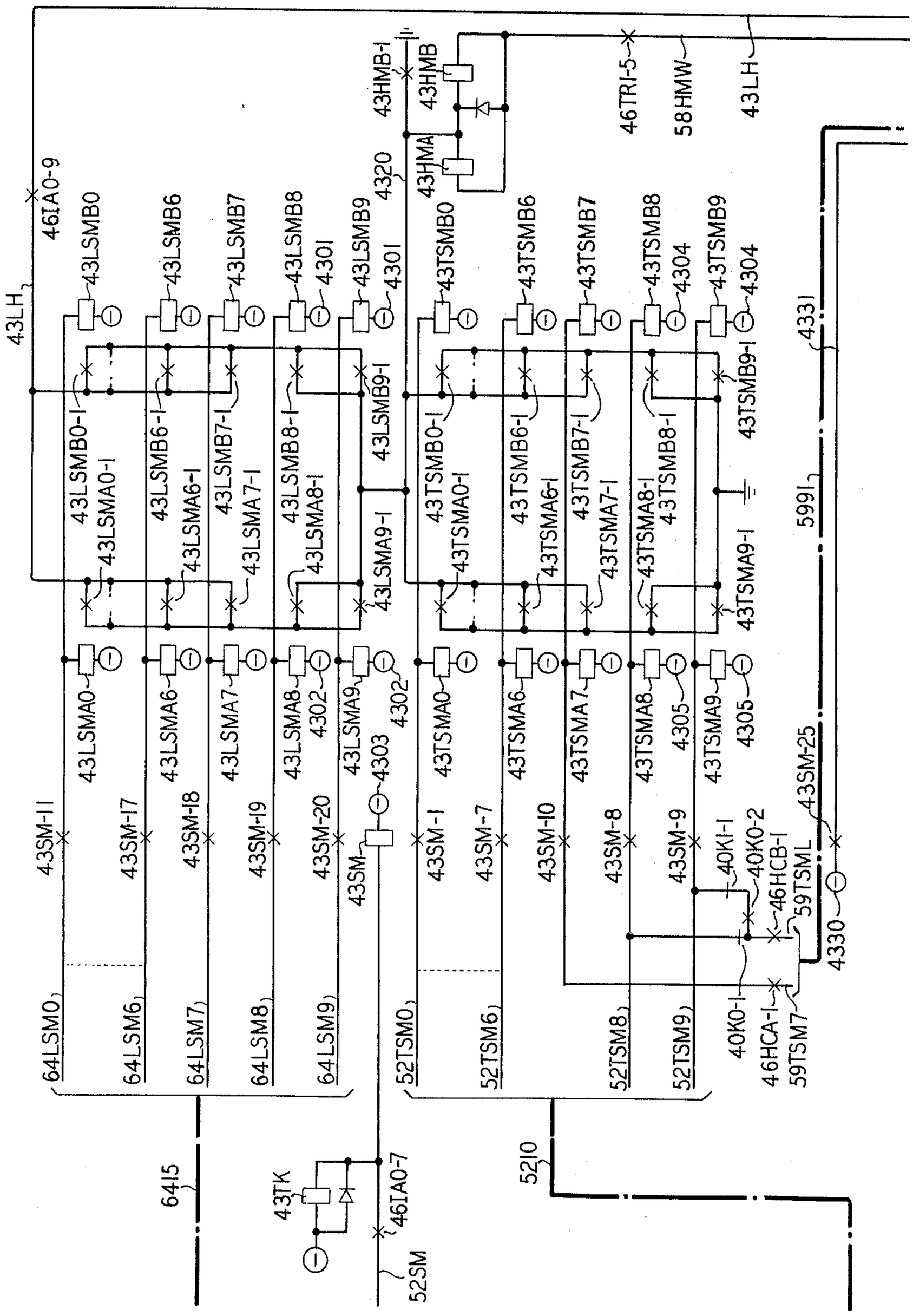

FIG. 43

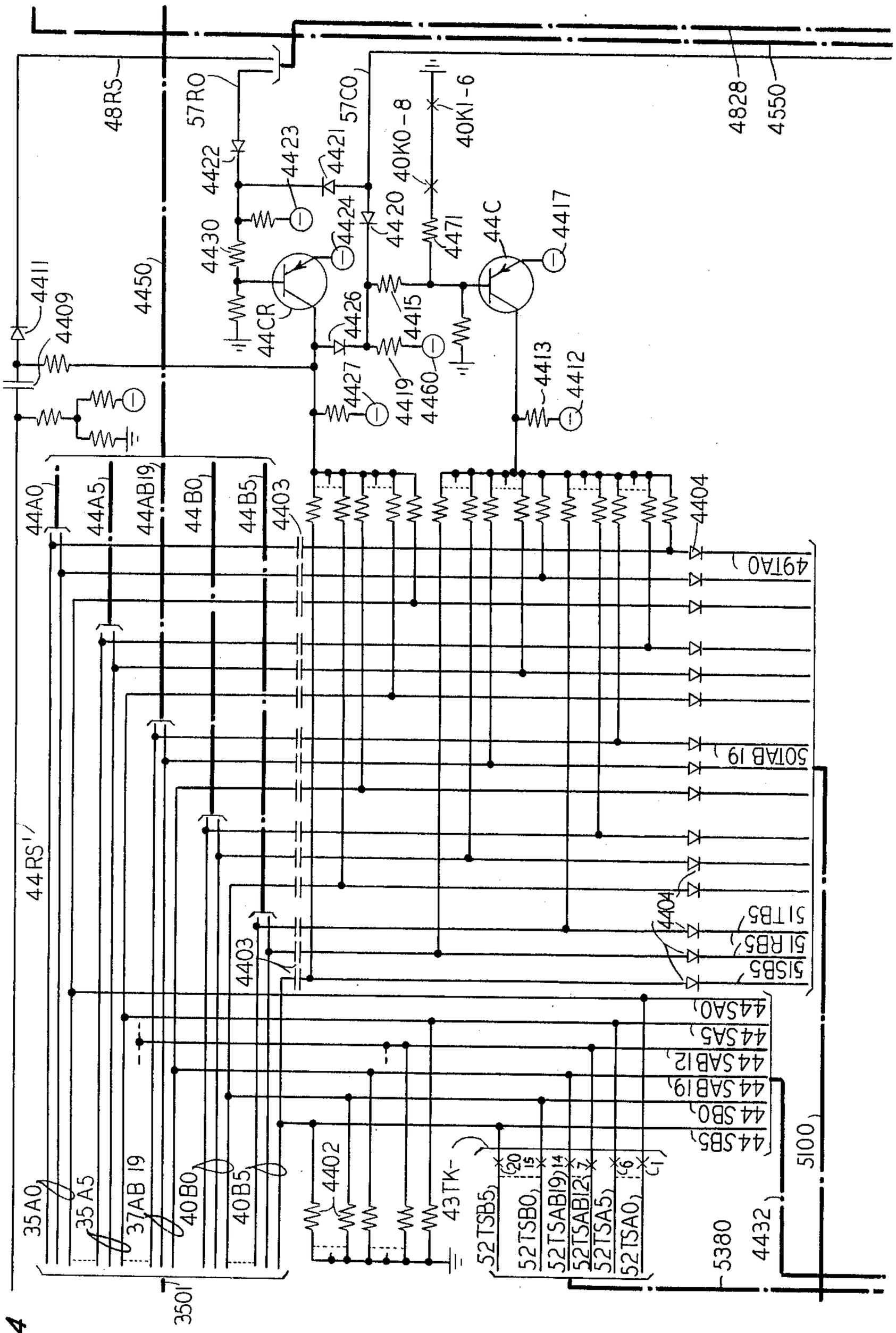
48RS
57RO
57CO
4828
4550
40KI-6
40KO-8
4422
4423
4421
4424
4420
4430
4471
44C
4417
4411
4409
4450
44CR
4426
4415
4427
4419
4460
4413
4412
44A0
44A5
44AB19
44B0
44B5
4403
4404
49TA0
50TAB 19
44RS'
51TB5
51RB5
51SB5
44SA0
44SA5
44SAB12
44SAB19
44SB0
44SB5
5100
35A0
35A5
37AB 19
40B0
40B5
4402
43TK-
52TSB5
52TSB0
52TSAB19
52TSAB12
52TSA5
52TSA0
5380
4432
3501

FIG. 44

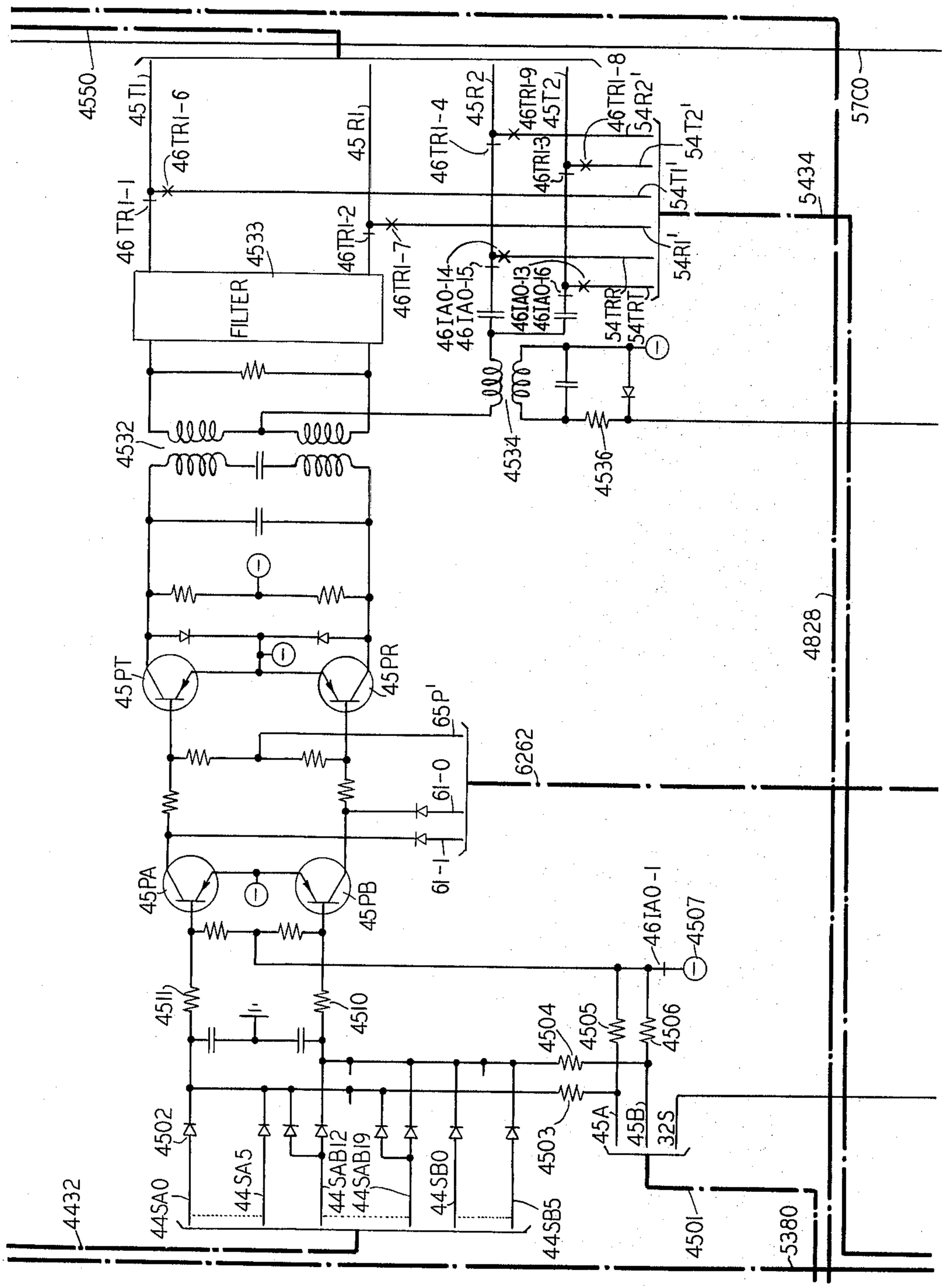
4550
45TI
46TRI-6
46TRI-1
45RI
46TRI-4
45R2
46TRI-9
45T2
46TRI-8
54R2'
54T2'
54TI'
54RI'
46TRI-3
46TRI-2
46TRI-7
4533
FILTER
46IAO-14
46IAO-15
46IAO-13
46IAO-16
54TRR
54TRT
4534
4536
4532
57C0
5434
4828
45PT
45PR
65P'
6262
6I-0
6I-1
45PA
45PB
46IAO-1
4507
45II
45I0
4504
4505
4506
4502
4503
45A
45B
32S
44SA0
44SA5
44SABI2
44SABI9
44SB0
44SB5
4501
5380
4432

FIG. 45

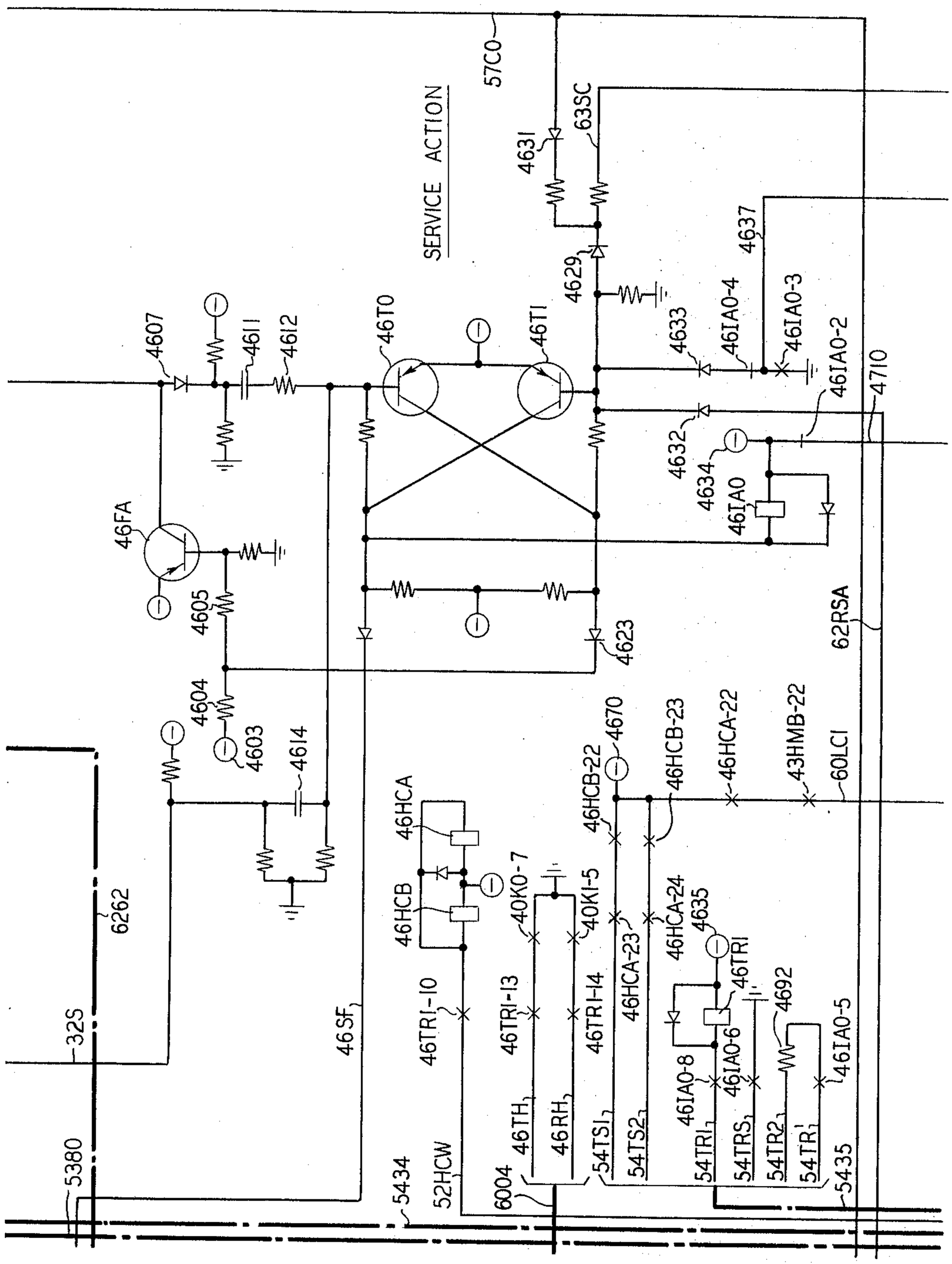
SERVICE ACTION
57C0
63SC
4631
4637
4629
4633
46IA0-4
46IA0-3
46IA0-2
4710
4632
4634
46IA0
4607
4611
4612
46T0
46T1
46FA
4605
4623
62RSA
4604
4603
4614
4670
46HCB-23
46HCA-22
43HMB-22
60LC1
46HCB-22
46HCA
46HCB
40K0-7
40K1-5
46HCA-24
4635
46HCA-23
46TR1
4692
46TR1-10
46TR1-13
46TR1-14
46IA0-5
46IA0-6
46IA0-8
46TH1
46RH2
54TS1
54TS2
54TR1
54TRS1
54TR2
54TR1'
5435
6262
32S
46SF
5380
5434
52HCW
6004

FIG. 46

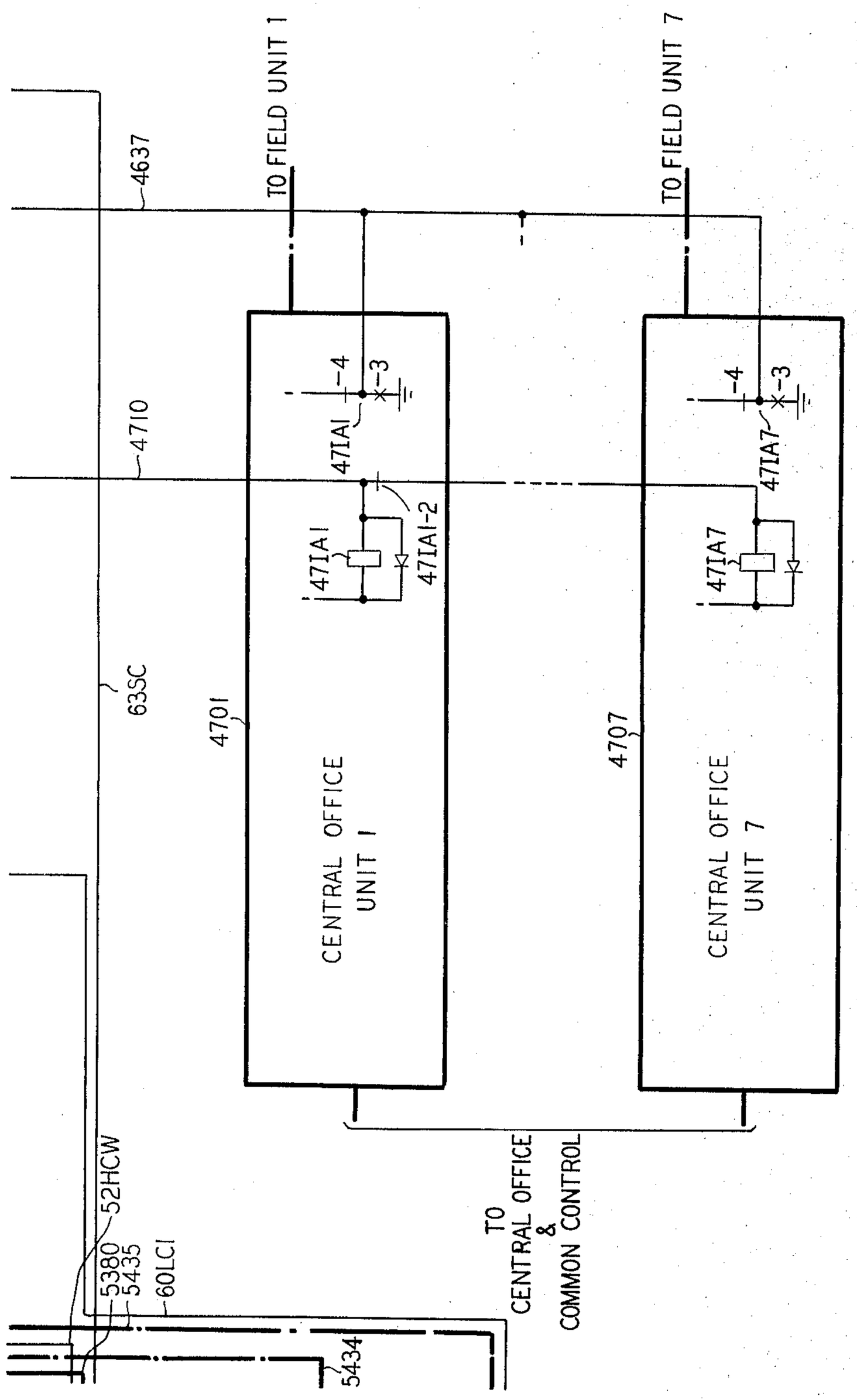
TO FIELD UNIT 1
TO FIELD UNIT 7
4637
4710
63SC
52HCW
5380
5435
60LCI
5434
4701
4707
CENTRAL OFFICE UNIT 1
CENTRAL OFFICE UNIT 7
47IA1
47IA1-2
47IA7
-4
-3
TO CENTRAL OFFICE & COMMON CONTROL

FIG. 47

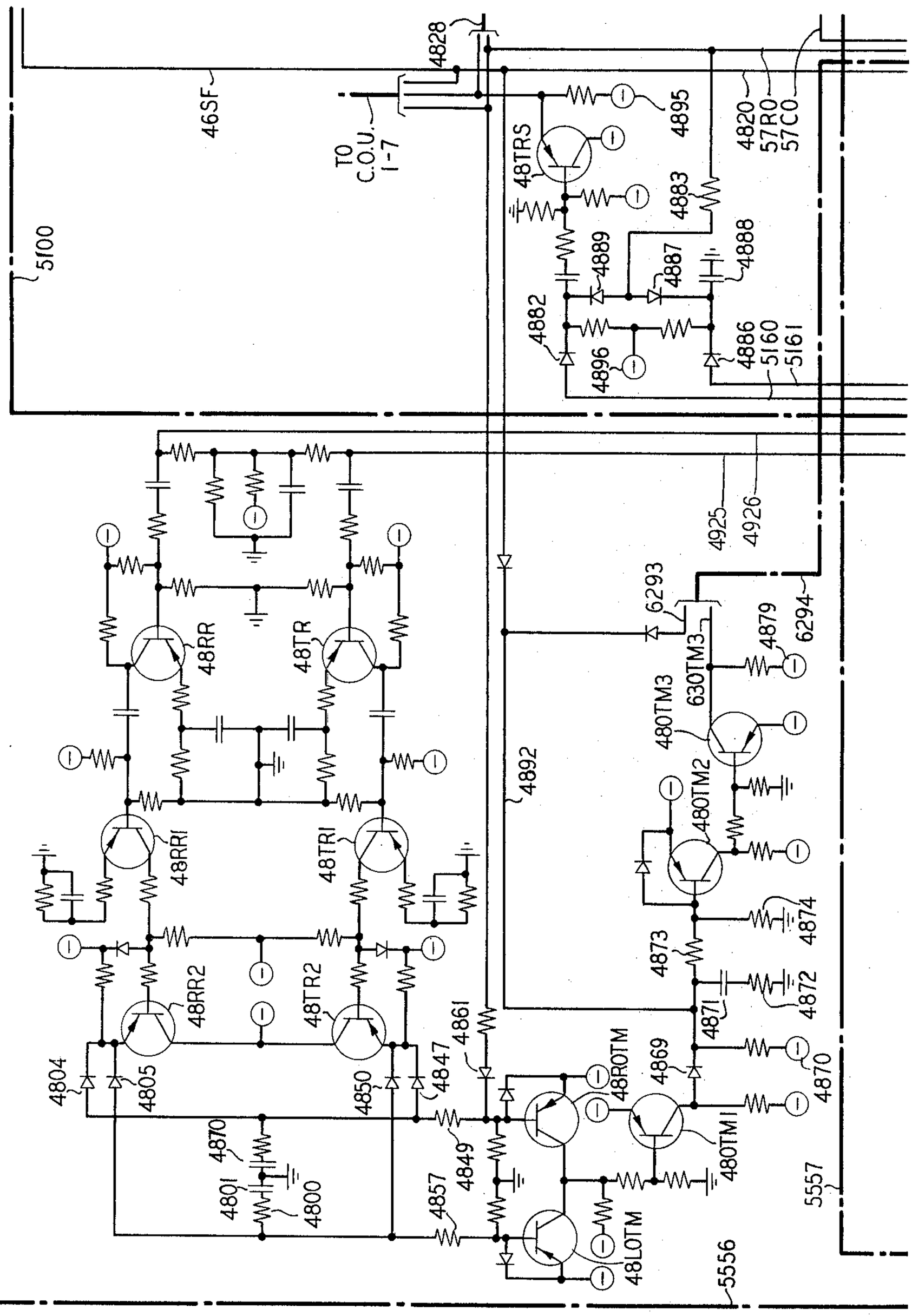
4828
46SF
TO C.O.U. 1-7
4895
48TRS
4820
57RO
57CO
4883
4888
4889
4887
4882
4896
4886
5160
5161
5100
4925
4926
6293
6294
4879
630TM3
480TM3
480TM2
4892
48RR
48TR
48RRI
48TRI
48RR2
48TR2
4874
4873
4872
4871
4869
4870
4861
48ROTM
480TMI
4804
4805
4850
4847
4870
4801
4800
4857
4849
48LOTM
5557
5556

FIG. 48

UNIVERSAL LINE CONCENTRATOR

Filed Dec. 31, 1962 69 Sheets-Sheet 52

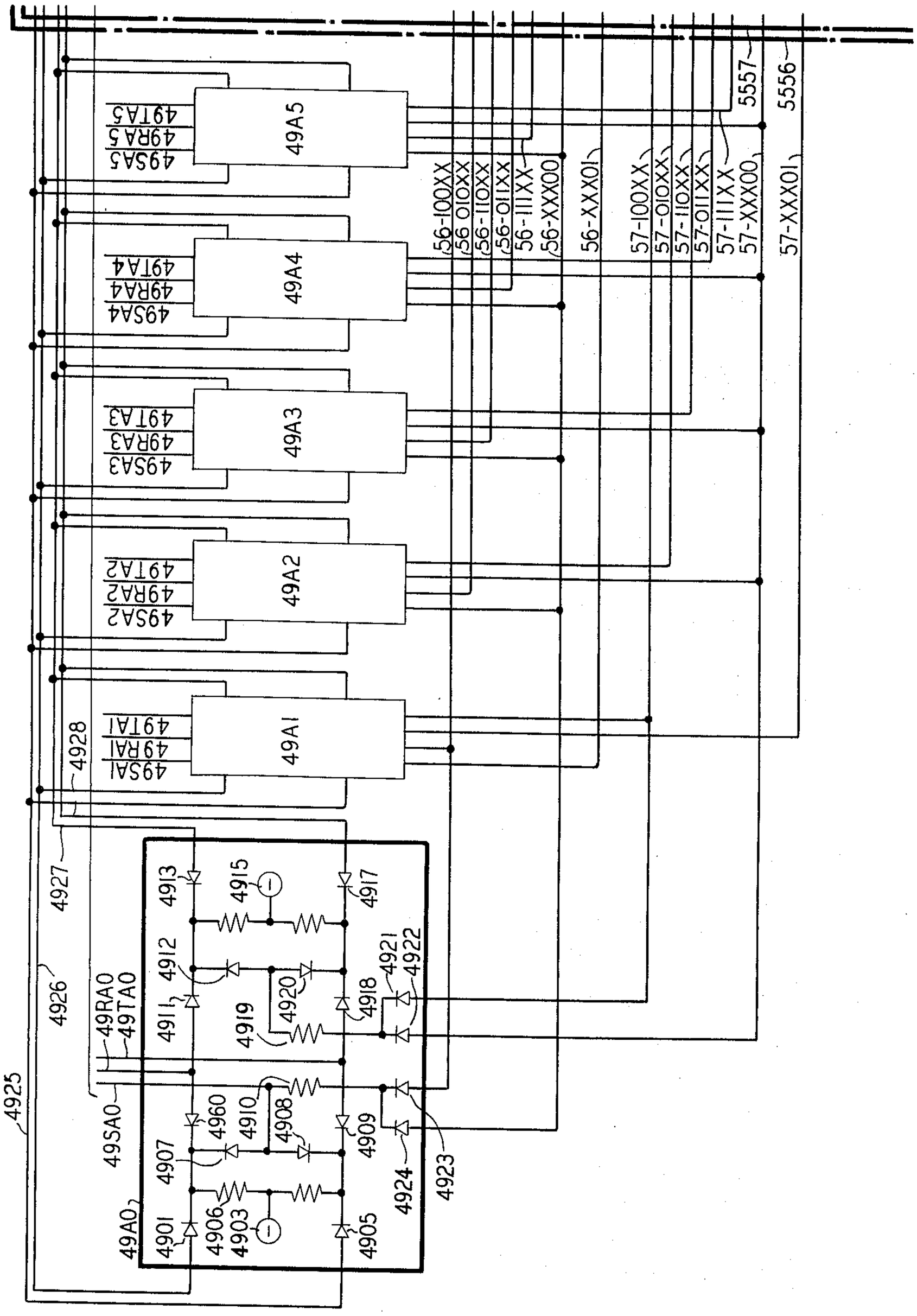

FIG. 49

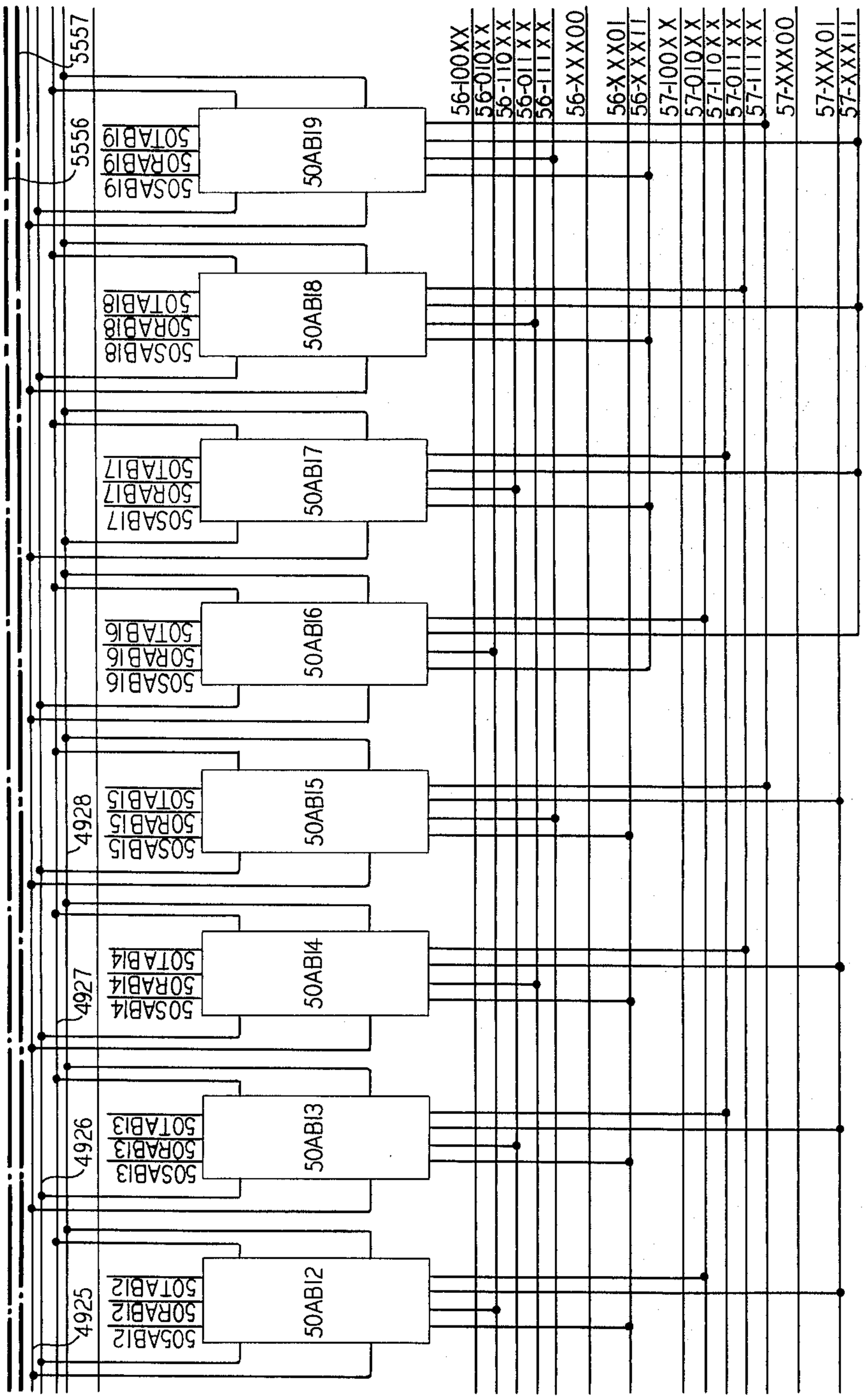
5557
5556
4928
4927
4926
4925
50SAB19
50RAB19
50TAB19
50AB19
50SAB18
50RAB18
50TAB18
50AB18
50SAB17
50RAB17
50TAB17
50AB17
50SAB16
50RAB16
50TAB16
50AB16
50SAB15
50RAB15
50TAB15
50AB15
50SAB14
50RAB14
50TAB14
50AB14
50SAB13
50RAB13
50TAB13
50AB13
50SAB12
50RAB12
50TAB12
50AB12
56-100XX
56-010XX
56-110XX
56-011XX
56-111XX
56-XXX00
56-XXX01
56-XXX11
57-100XX
57-010XX
57-110XX
57-011XX
57-111XX
57-XXX00
57-XXX01
57-XXX11

FIG. 50

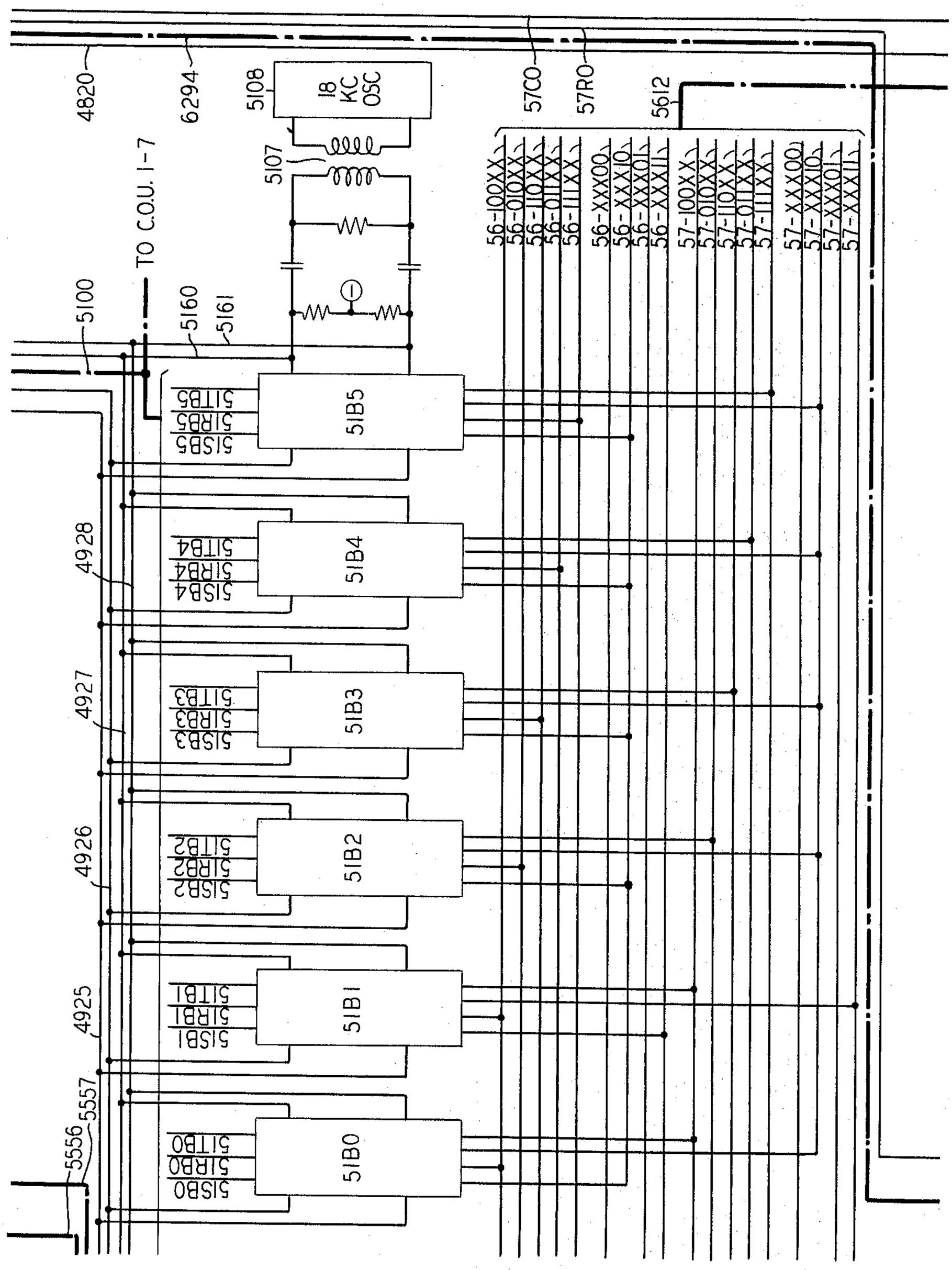
4820
6294
5108
18 KC OSC
5107
TO C.O.U. 1-7
5100
5160
5161
57CO
57RO
5612
56-100XX
56-010XX
56-110XX
56-011XX
56-111XX
56-XXX00
56-XXX10
56-XXX01
56-XXX11
57-100XX
57-010XX
57-110XX
57-011XX
57-111XX
57-XXX00
57-XXX10
57-XXX01
57-XXX11
51B5
51SB5
51RB5
51TB5
51B4
51SB4
51RB4
51TB4
51B3
51SB3
51RB3
51TB3
51B2
51SB2
51RB2
51TB2
51B1
51SB1
51RB1
51TB1
51B0
51SB0
51RB0
51TB0
4928
4927
4926
4925
5557
5556

FIG. 51

UNIVERSAL LINE CONCENTRATOR

Filed Dec. 31, 1962 69 Sheets-Sheet 55

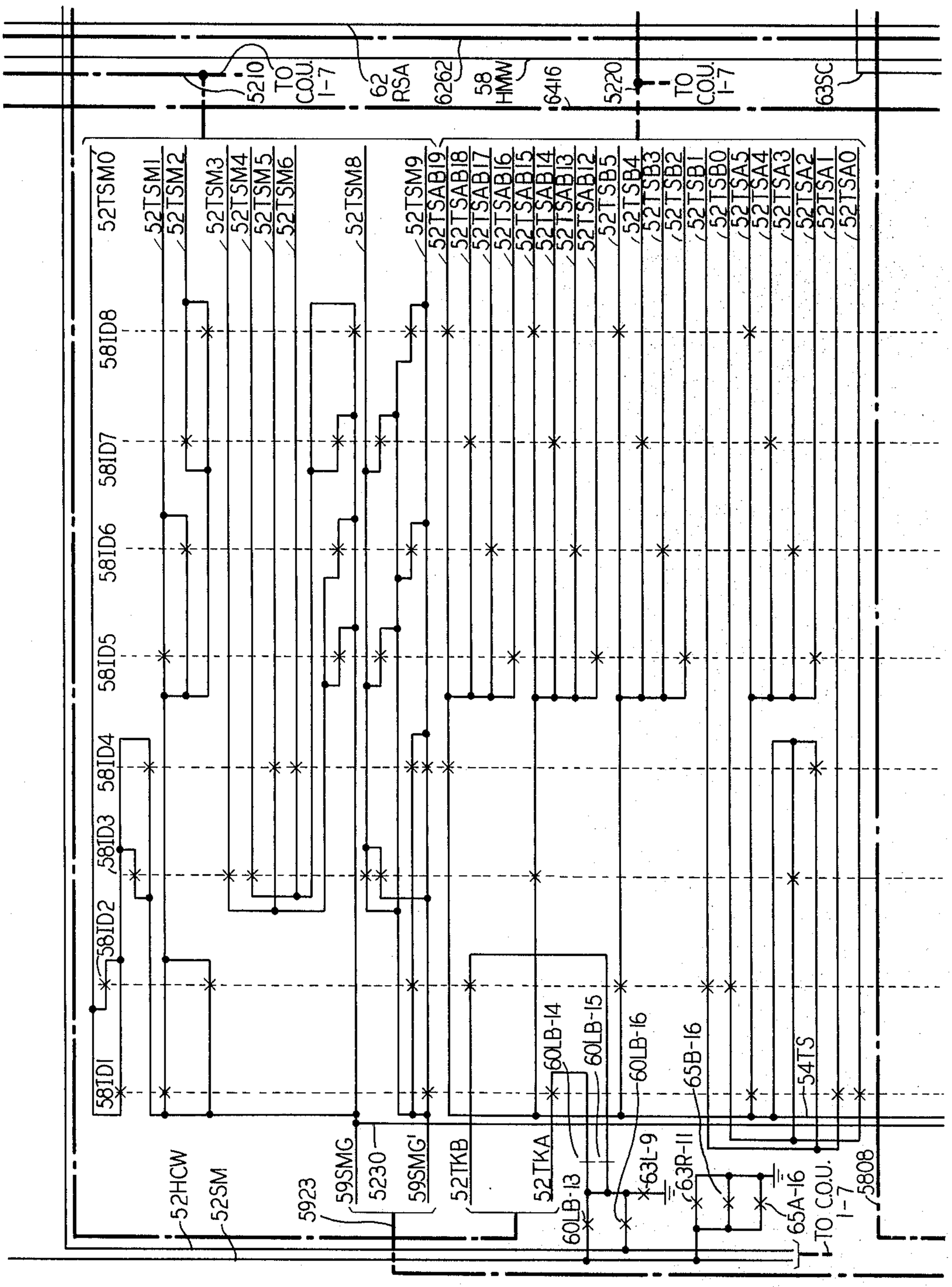

FIG. 52

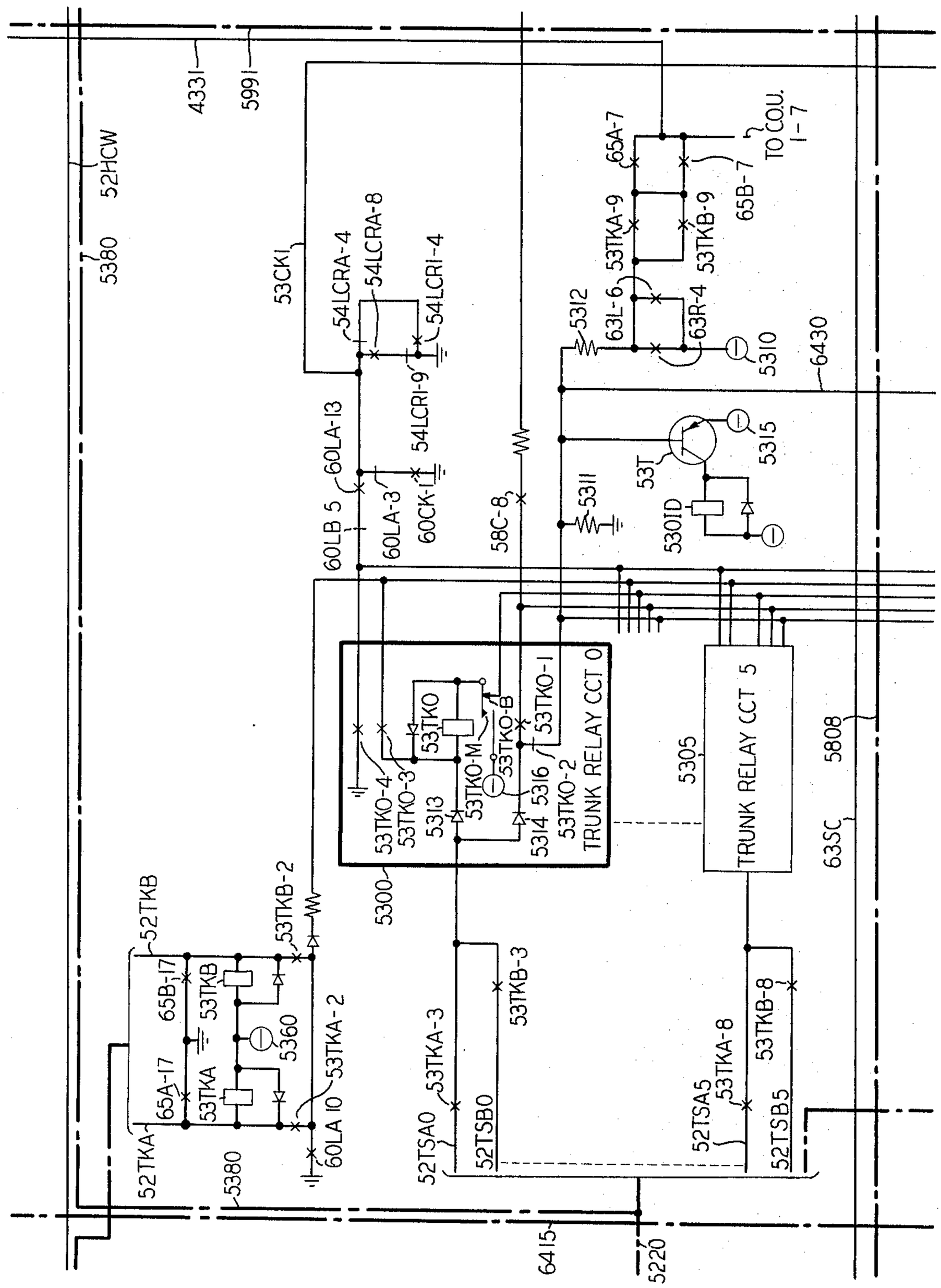
433
599
52HCW
5380
53CKI
54LCRA-4
54LCRA-8
54LCRI-4
54LCRI-9
60LA-13
60LB 5
60LA-3
60CK-1
58C-8
65A-7
65B-7
TO COU. 1-7
53TKA-9
53TKB-9
63L-6
63R-4
5312
5310
6430
53T
5315
5311
5301D
53TKO-4
53TKO-3
53TKO
53TKO-M
53TKO-B
53TKO-1
53TKO-2
5313
5314
5316
TRUNK RELAY CCT 0
5300
5305
TRUNK RELAY CCT 5
5808
63SC
52TKB
65B-17
53TKB
53TKB-2
5360
53TKA-2
65A-17
53TKA
52TKA
60LA 10
5380
53TKA-3
53TKB-3
52TSA0
52TSB0
53TKA-8
53TKB-8
52TSA5
52TSB5
6415
5220

FIG. 53

UNIVERSAL LINE CONCENTRATOR

Filed Dec. 31, 1962 69 Sheets-Sheet 57

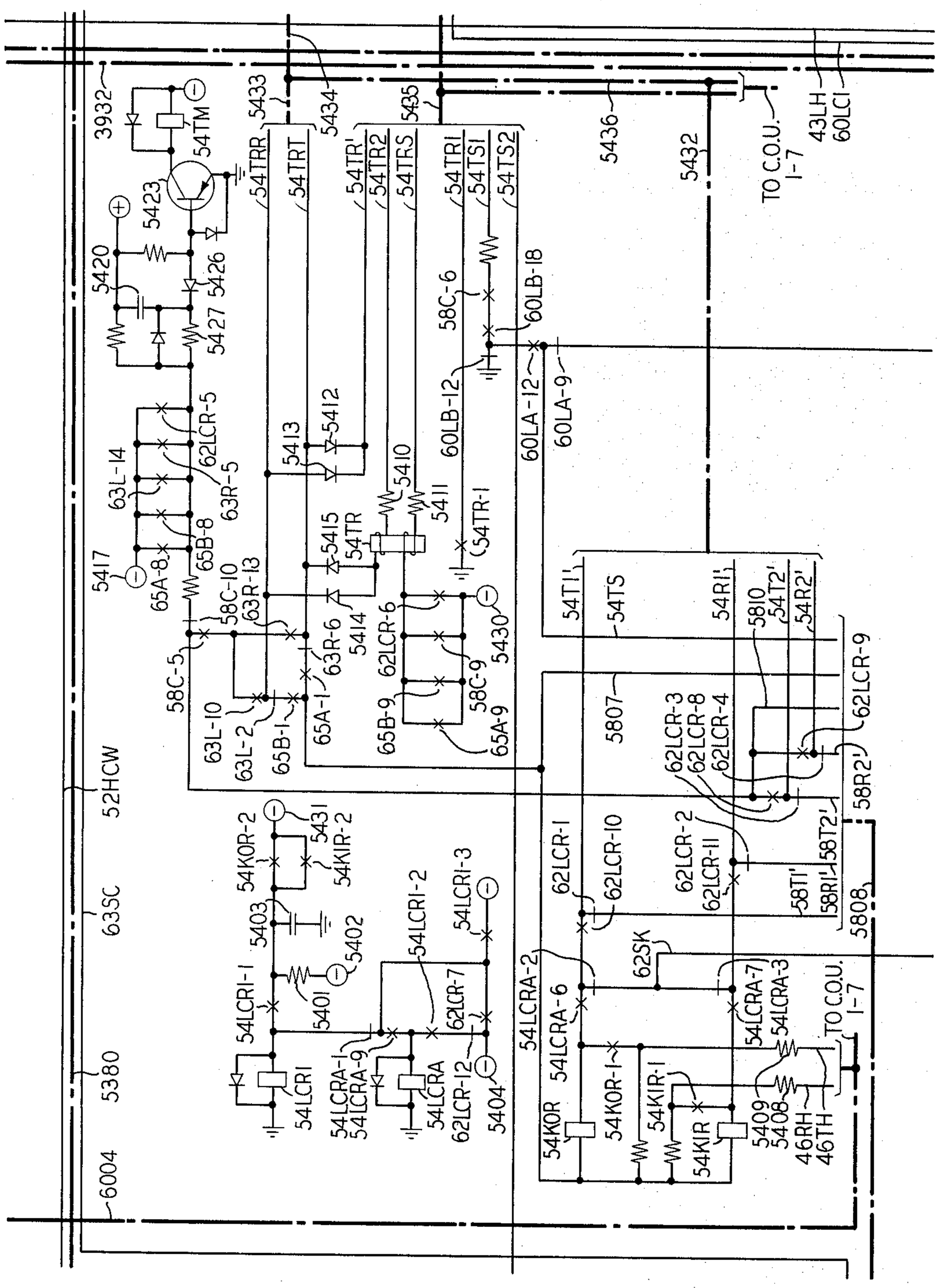

FIG. 54

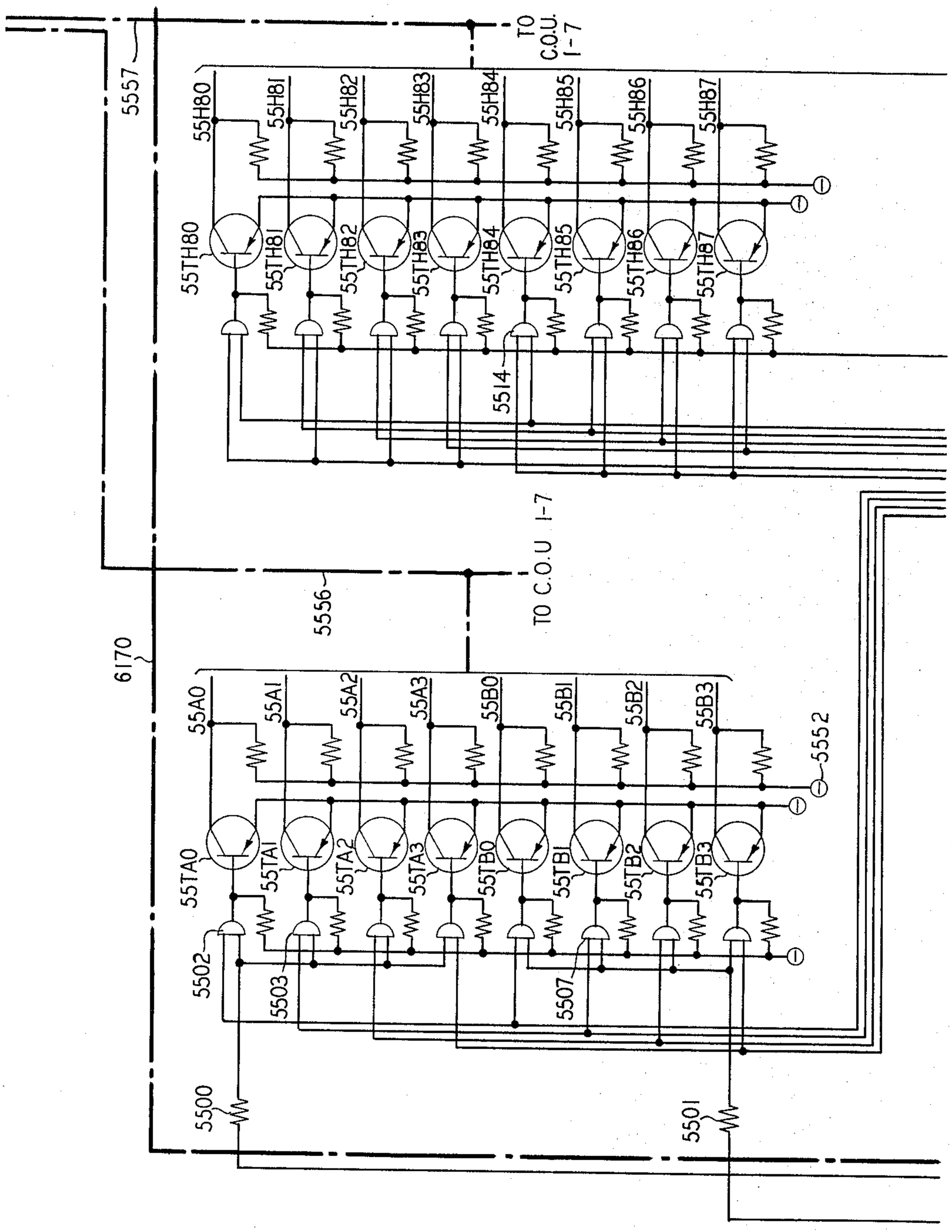
TO C.O.U. 1-7
5557
55H80
55H81
55H82
55H83
55H84
55H85
55H86
55H87
55TH80
55TH81
55TH82
55TH83
55TH84
55TH85
55TH86
55TH87
5514
TO C.O.U 1-7
5556
6170
55A0
55A1
55A2
55A3
55B0
55B1
55B2
55B3
5552
55TA0
55TA1
55TA2
55TA3
55TB0
55TB1
55TB2
55TB3
5502
5503
5507
5500
5501

FIG. 55

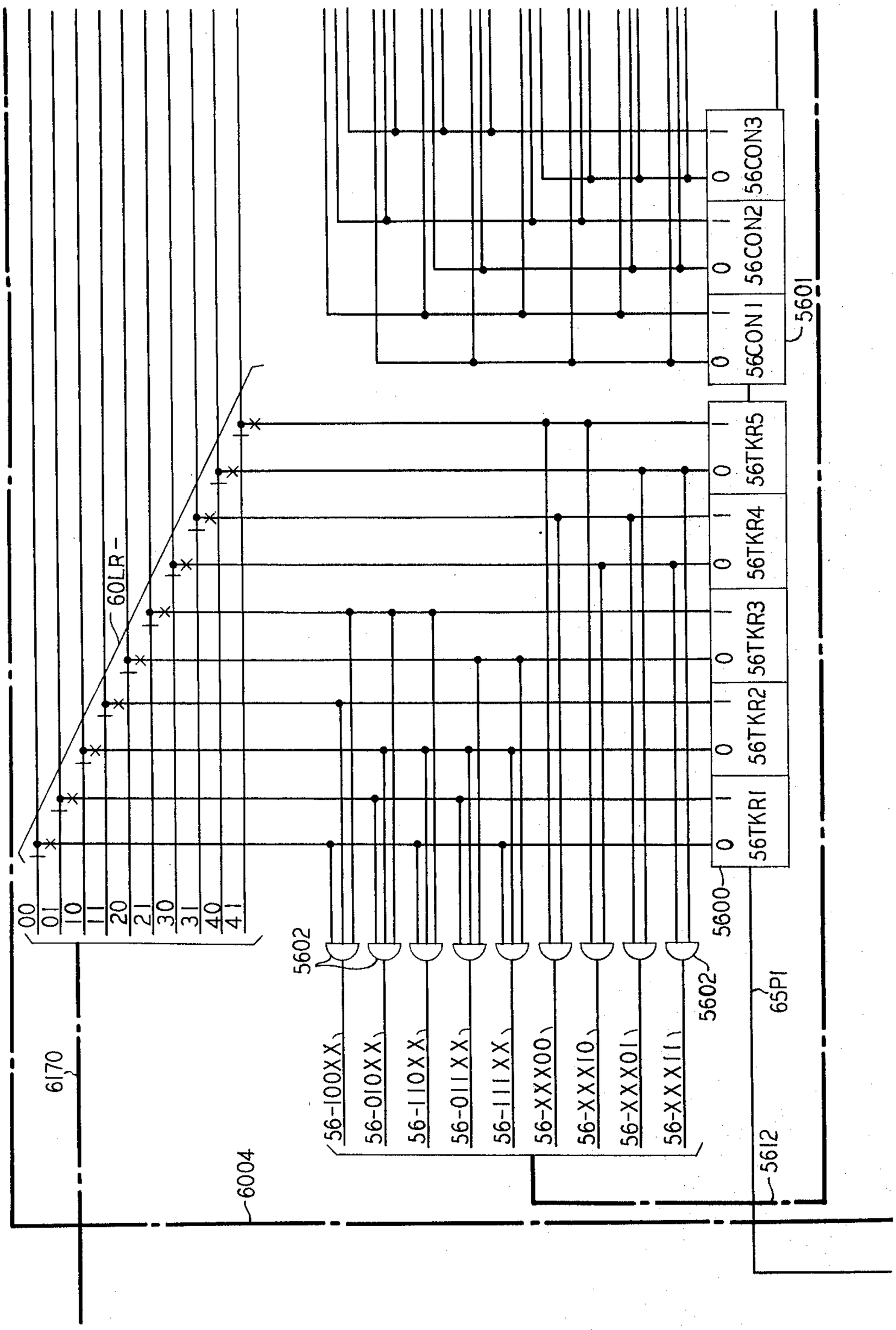
56CON3
56CON2
56CON1
5601
56TKR5
56TKR4
56TKR3
56TKR2
56TKR1
5600
60LR
00
01
10
11
20
21
30
31
40
41
5602
5602
65P1
6170
6004
5612
56-100XX
56-010XX
56-110XX
56-011XX
56-111XX
56-XX00
56-XX10
56-XX01
56-XX11

FIG. 56

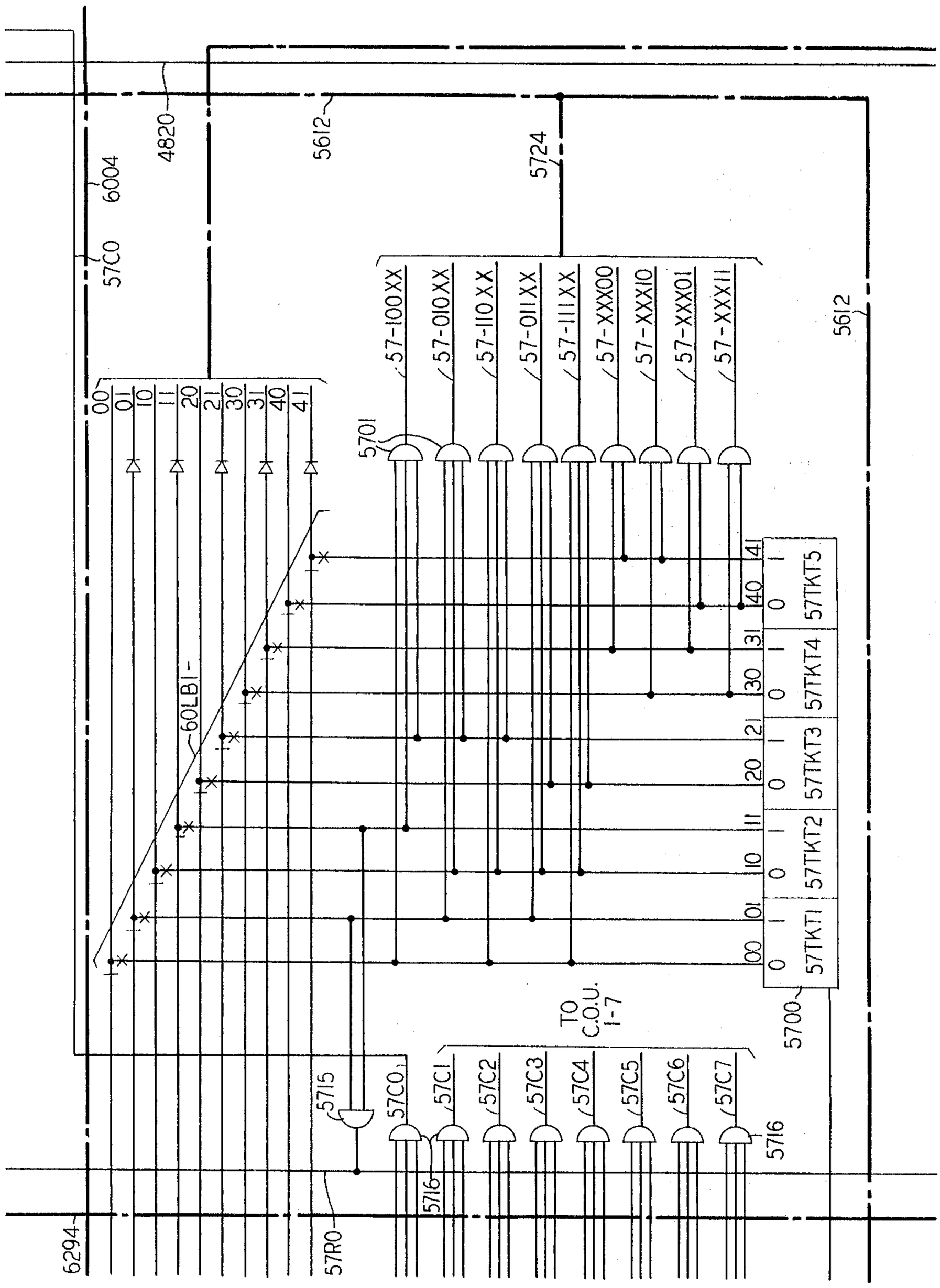
4820
5612
5724
6004
57C0
57-100XX
57-010XX
57-110XX
57-011XX
57-111XX
57-XXX00
57-XXX10
57-XXX01
57-XXX11
5612
5701
00 01 10 11 20 21 30 31 40 41
60LBI-
57TKT1
57TKT2
57TKT3
57TKT4
57TKT5
5700
TO C.O.U. 1-7
57C1
57C2
57C3
57C4
57C5
57C6
57C7
5715
57C0
5716
5716
57R0
6294

FIG. 57

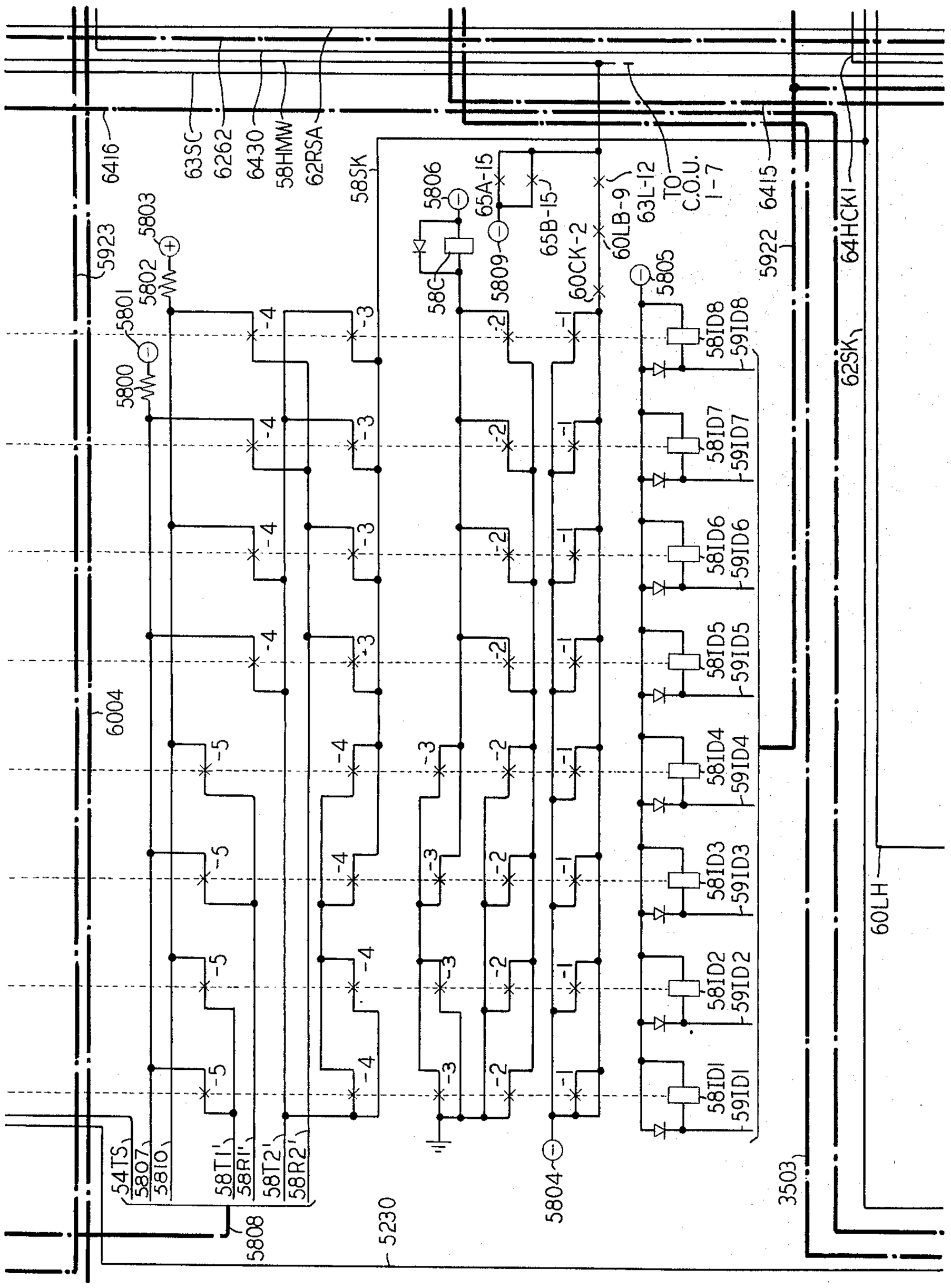
6416
63SC
6262
6430
58HMW
62RSA
58SK
5806
65A-15
65B-15
60LB-9
63L-12
TO C.O.U. 1-7
6415
64HCK1
5923
5803
5802
5801
5800
58C
5809
60CK-2
5805
5922
58ID8
59ID8
62SK
58ID7
59ID7
58ID6
59ID6
58ID5
59ID5
6004
58ID4
59ID4
58ID3
59ID3
60LH
58ID2
59ID2
58ID1
59ID1
54TS
5807
5810
58T1'
58R1'
58T2'
58R2'
5808
5230
5804
3503

FIG. 58

UNIVERSAL LINE CONCENTRATOR

Filed Dec. 31, 1962 69 Sheets-Sheet 62

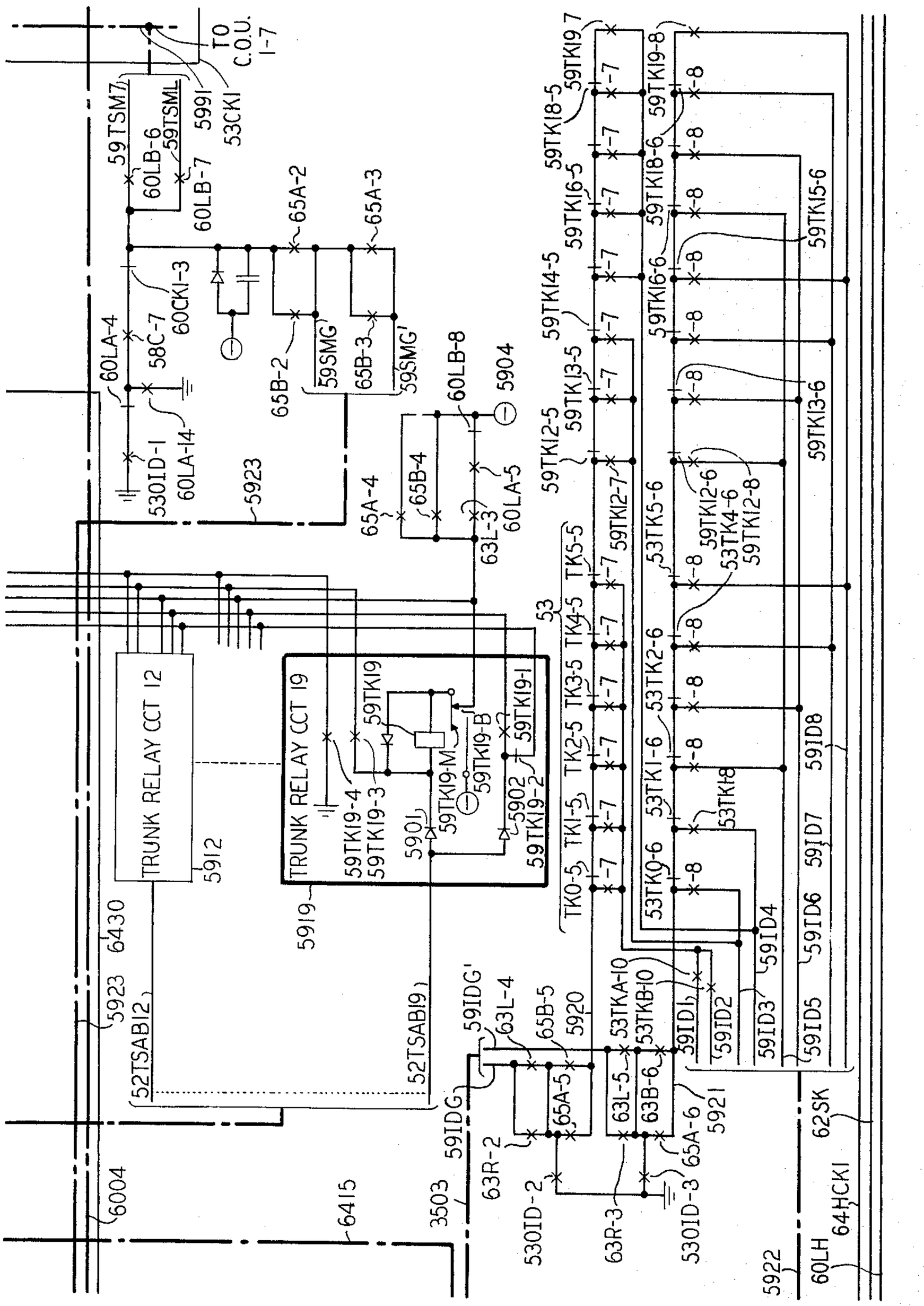

FIG. 59

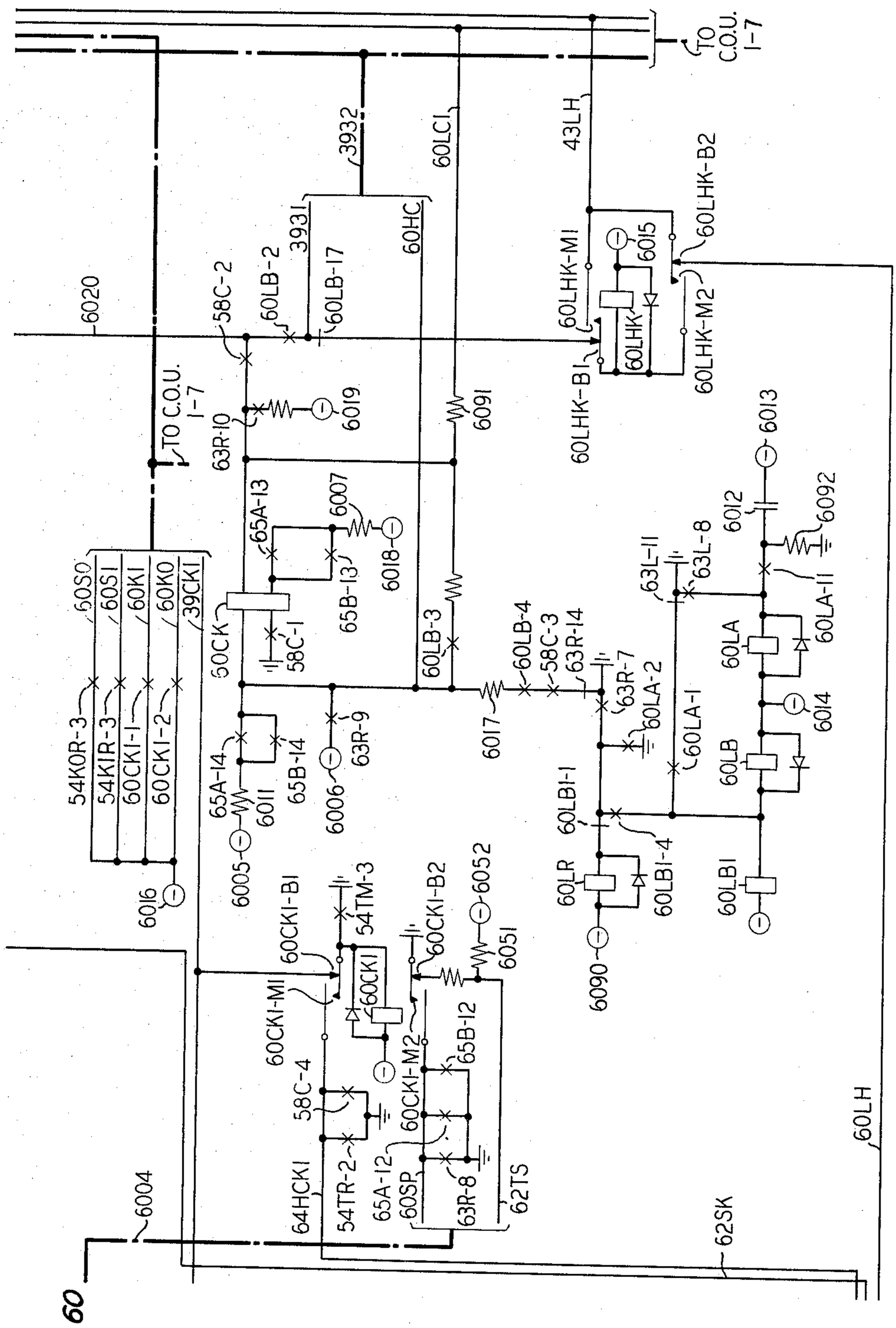
TO C.O.U. 1-7
43LH
60LCI
3932
60HC
3931
60LB-17
60LB-2
58C-2
6020
60LHK-M1
6015
60LHK-B2
60LHK
60LHK-M2
60LHK-B1
6019
63R-10
6091
6013
6012
6092
63L-11
63L-8
60LA-11
60LA
6014
60LB
60LA-1
60LA-2
63R-7
60LB-4
58C-3
63R-14
60LB-3
6017
63R-9
6006
65B-14
6011
65A-14
6005
6016
60LBI-1
60LBI-4
60LBI
60LR
6090
6052
6051
60CKI-B2
60CKI-B1
54TM-3
60CKI
60CKI-M1
60CKI-M2
65B-12
58C-4
60SP
63R-8
62TS
54TR-2
64HCKI
65A-12
6004
62SK
60LH
6007
65A-13
6018
65B-13
58C-1
60CK
60SO
60SI
60KI
60KO
39CKI
54KOR-3
54KIR-3
60CKI-1
60CKI-2

FIG. 60

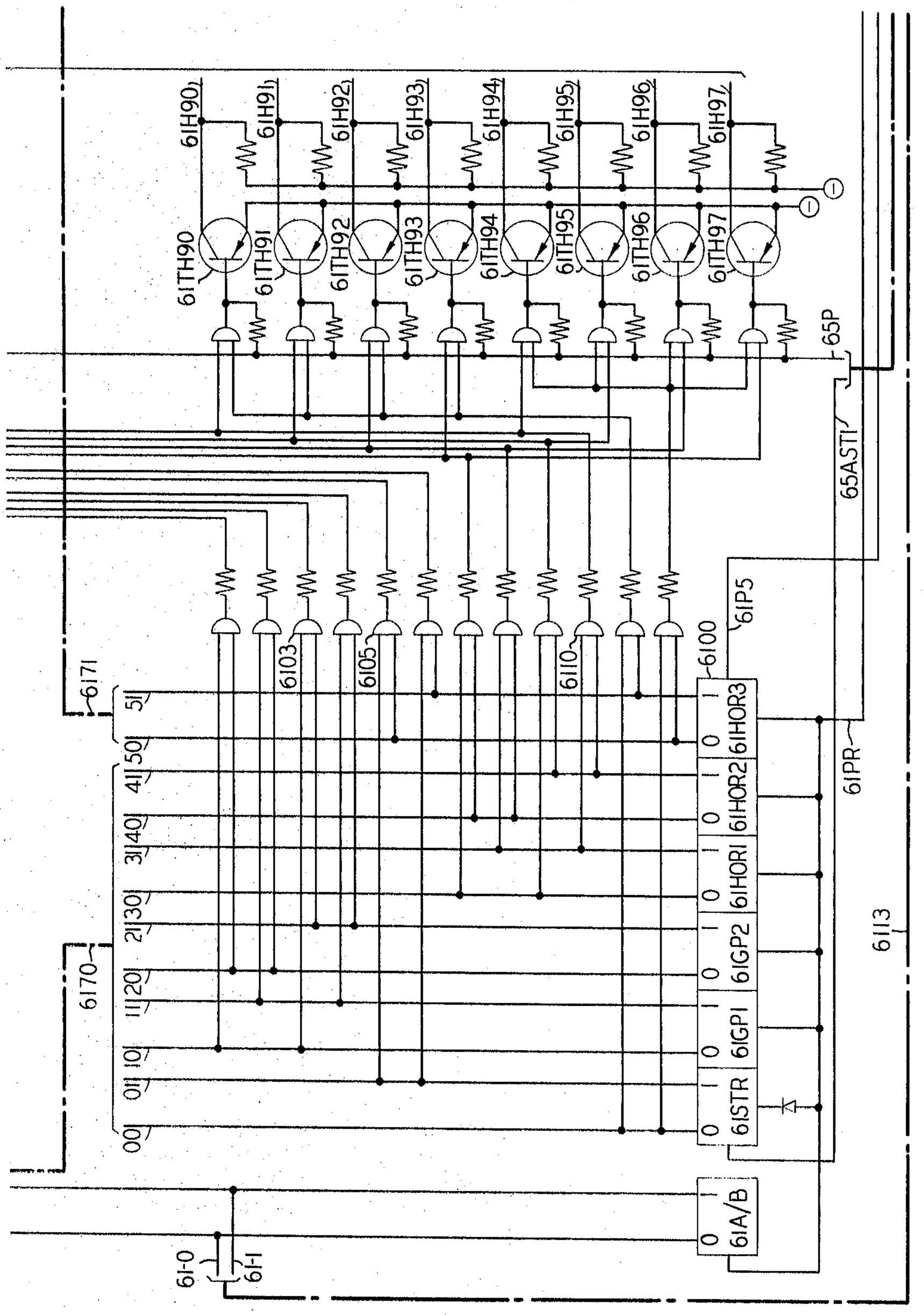
61H90
61H91
61H92
61H93
61H94
61H95
61H96
61H97
61TH90
61TH91
61TH92
61TH93
61TH94
61TH95
61TH96
61TH97
65P
65ASTI
61P5
6100
6103
6105
6110
6171
51
50
41
40
31
30
21
20
11
10
01
00
6170
61HOR3
61HOR2
61HORI
61GP2
61GPI
61STR
61PR
6113
61A/B
61-0
61-1

FIG. 61

UNIVERSAL LINE CONCENTRATOR

Filed Dec. 31, 1962 69 Sheets-Sheet 65

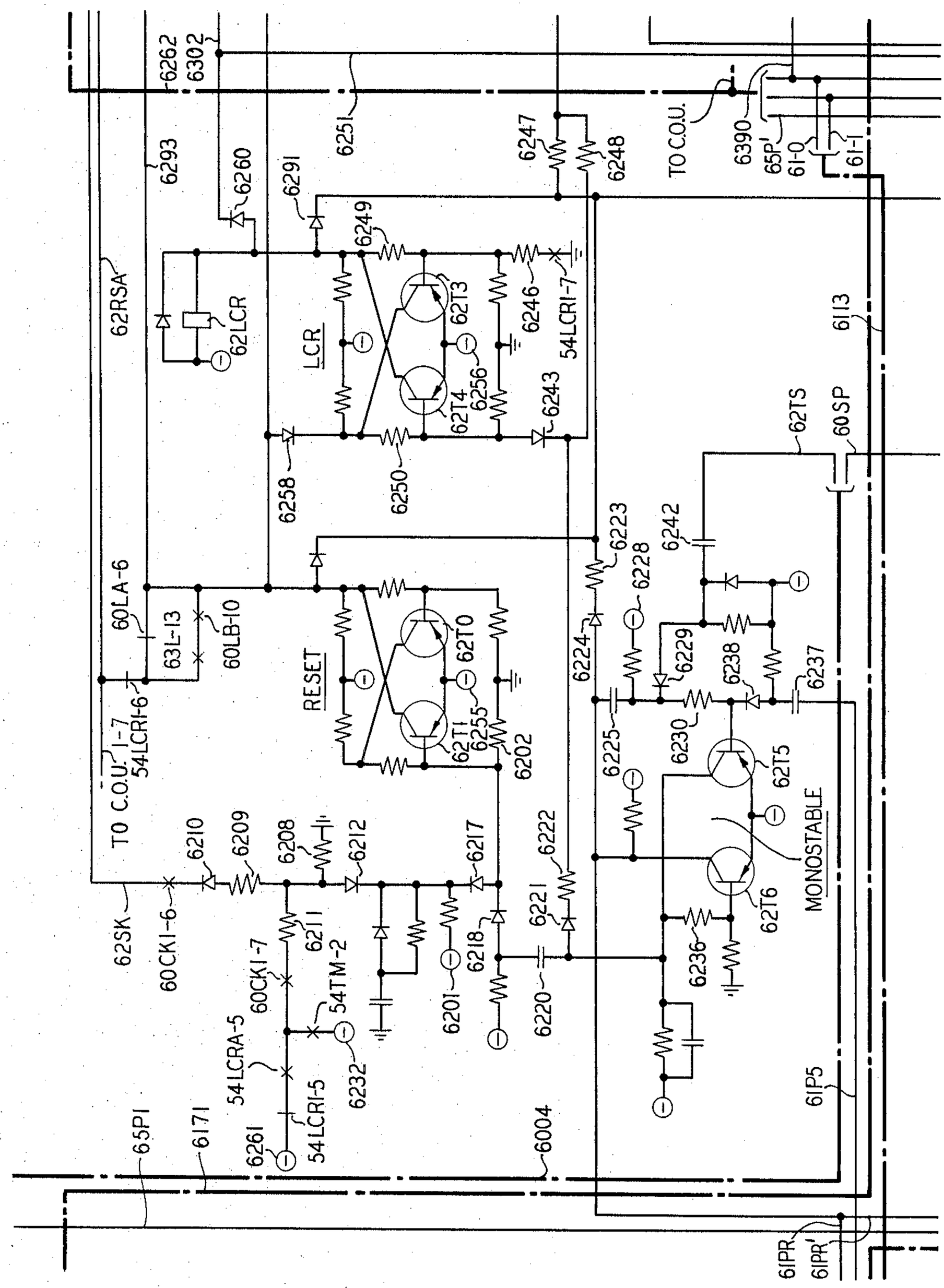

FIG. 62

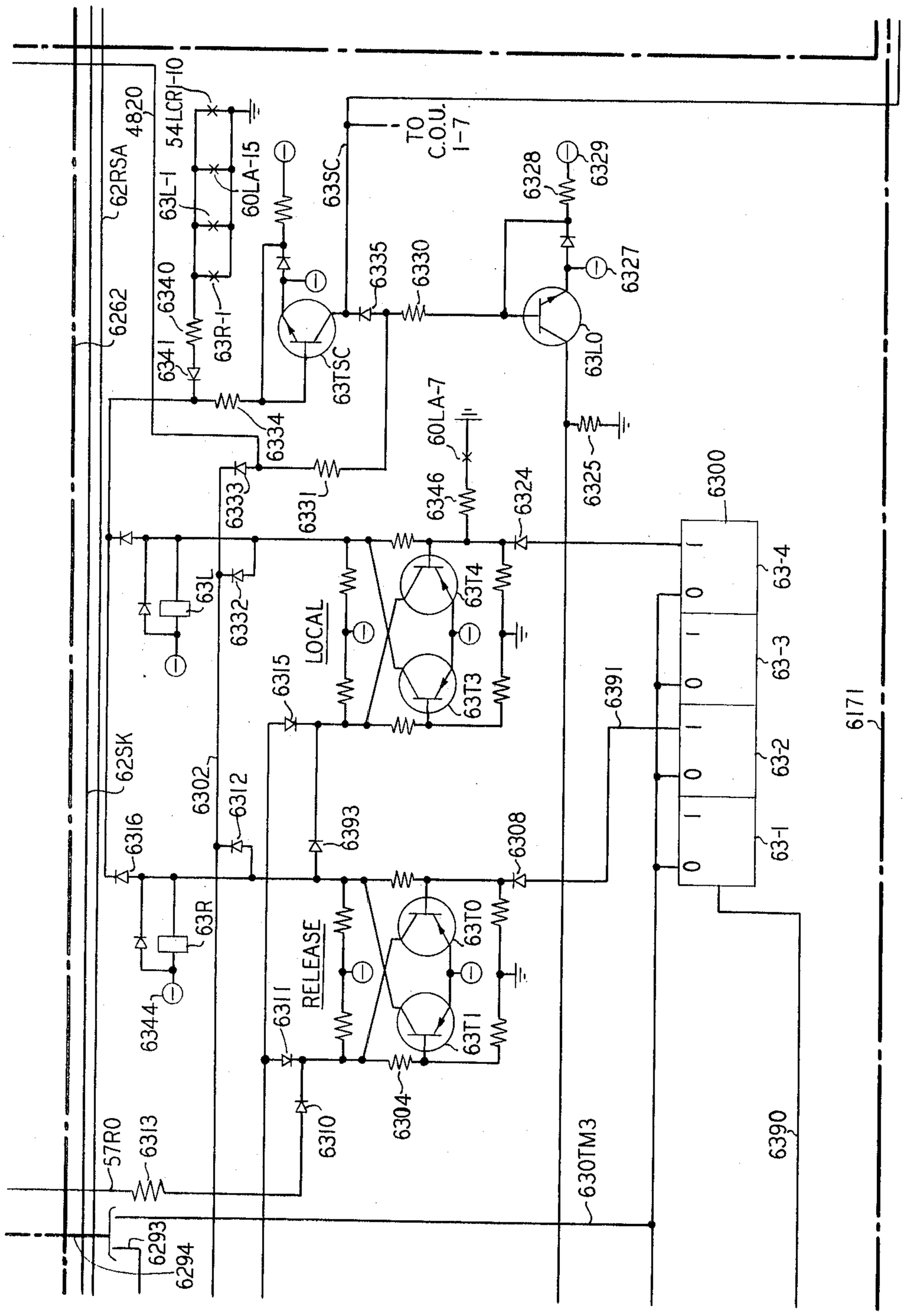
62RSA
4820
54LCRJ-10
63L-1
60LA-15
63SC
TO C.O.U. 1-7
6328
6329
6262
6340
63R-1
6335
6330
6327
6341
63TSC
63LO
6334
60LA-7
6325
6333
6331
6346
6324
6300
63L
6332
63T4
LOCAL
63-4
63-3
63I5
63T3
6391
6171
62SK
6302
6312
63-2
6316
6393
6308
63-1
63R
63T0
RELEASE
6344
6311
63T1
57R0
6313
6310
6304
6390
630TM3
6293
6294

FIG. 63

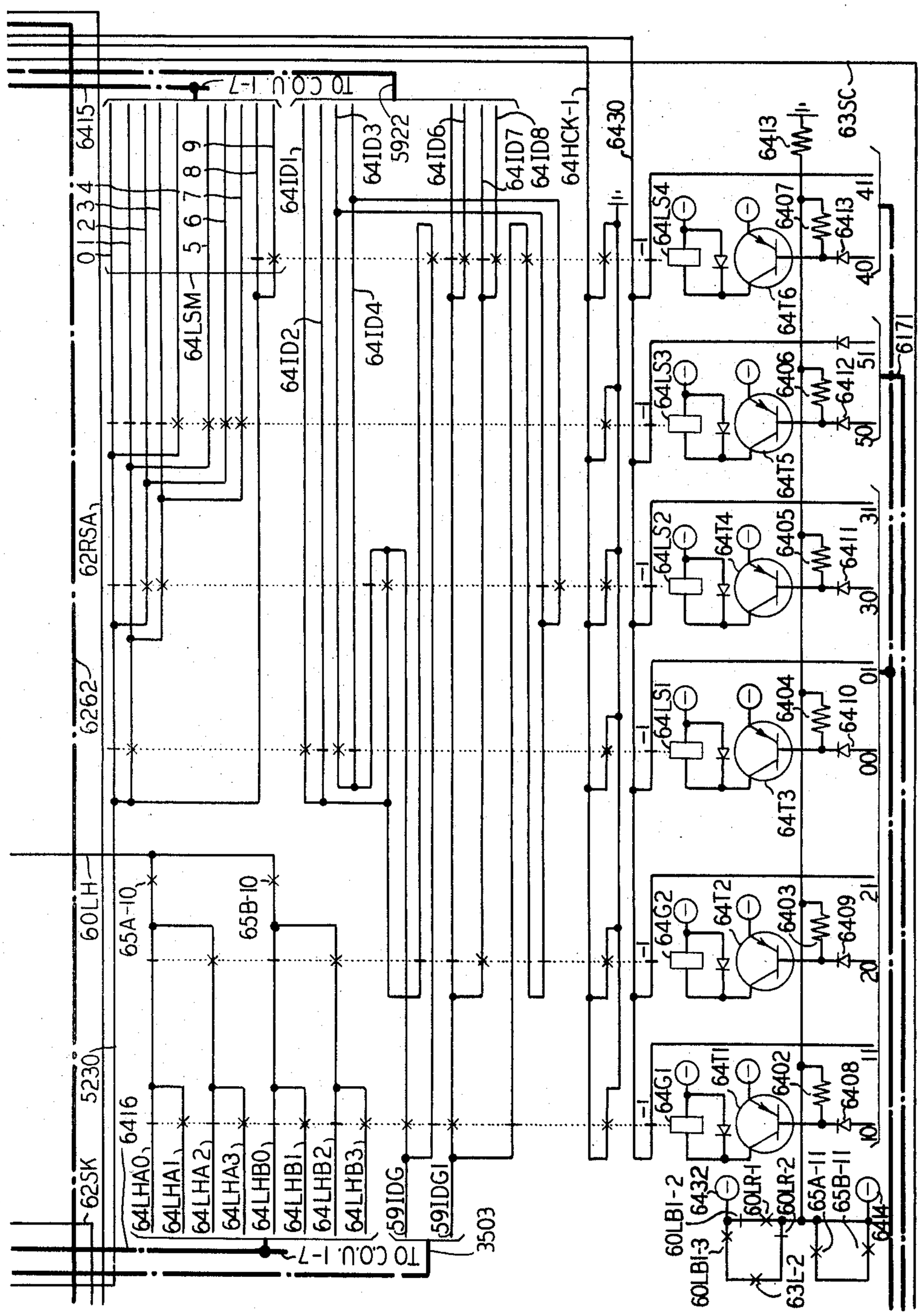
To C.O.U. 1-7
6415
0 1 2 3 4
5 6 7 8 9
64LSM
64ID1
64ID2
64ID3
5922
64ID4
64ID6
64ID7
64ID8
64HCK-1
6430
6413
63SC
64LS4
6407
64T6
41
40
64LS3
6406
64T5
51
50
6171
64LS2
64T4
6405
31
30
64LS1
6404
64T3
01
00
64G2
64T2
6403
21
20
64G1
64T1
6402
11
10
62RSA
6262
60LH
65A-10
65B-10
5230
625K
6416
64LHA0
64LHA1
64LHA2
64LHA3
64LHB0
64LHB1
64LHB2
64LHB3
59IDG
59IDG1
3503
60LBI-2
6432
60LBI-3
60LR-1
60LR-2
63L-2
65A-11
65B-11
6414
6409
6410
6411
6412
6408

FIG. 64

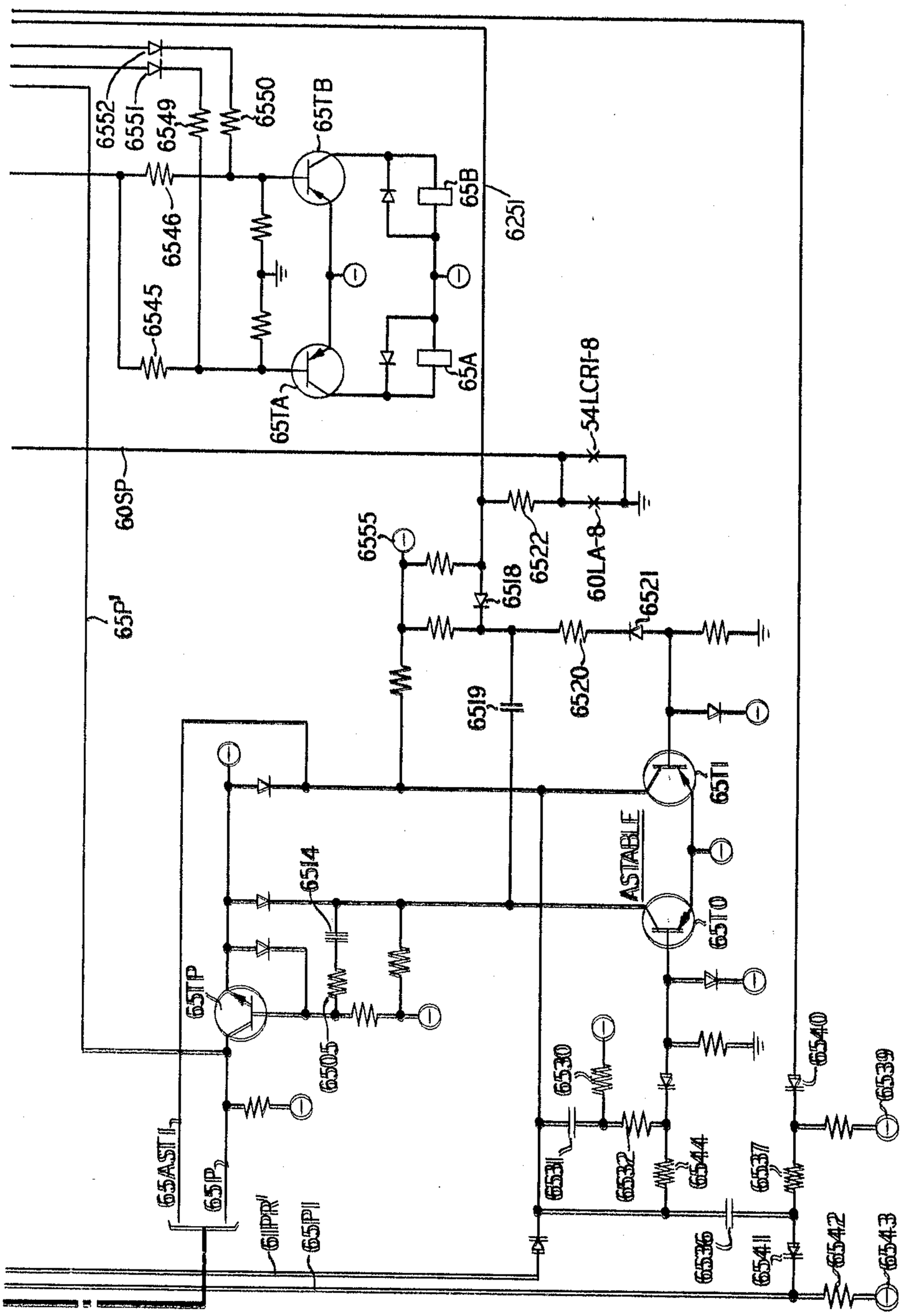
6552
6551
6549
6550
65TB
6546
65B
6251
6545
65A
65TA
54LCRI-8
60SP
6555
6522
60LA-8
65P'
6518
6521
6520
6519
65TI
ASTABLE
6514
65TO
65TP
6505
6530
65410
65339
65ASTI
65P
6531
6532
6544
6537
6536
6541
6542
6543
61PR
65PI

FIG. 65

FIG. 66

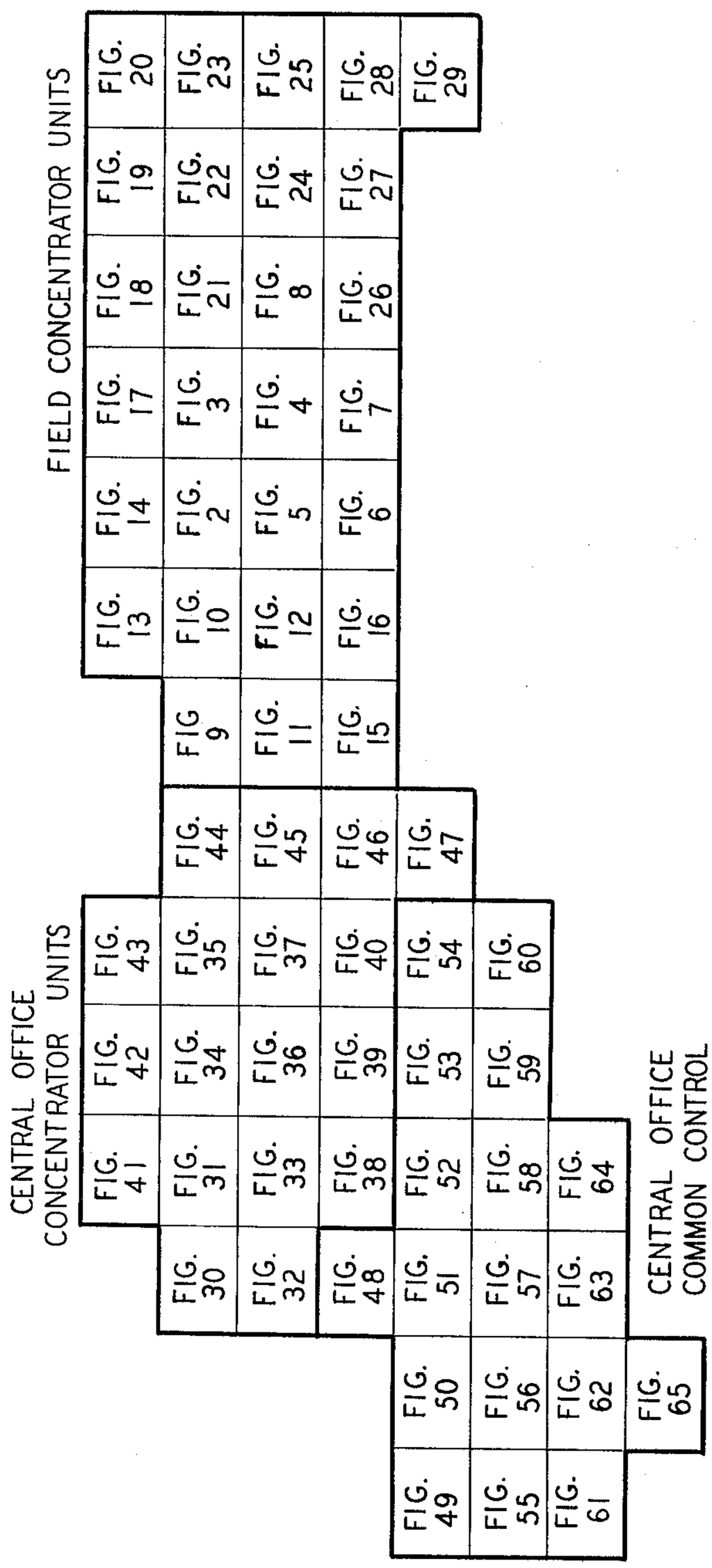
FIELD CONCENTRATOR UNITS
FIG. 13
FIG. 14
FIG. 17
FIG. 18
FIG. 19
FIG. 20
FIG. 10
FIG. 2
FIG. 3
FIG. 21
FIG. 22
FIG. 23
FIG. 12
FIG. 5
FIG. 4
FIG. 8
FIG. 24
FIG. 25
FIG. 16
FIG. 6
FIG. 7
FIG. 26
FIG. 27
FIG. 28
FIG. 9
FIG. 11
FIG. 15
FIG. 29
CENTRAL OFFICE CONCENTRATOR UNITS
FIG. 41
FIG. 42
FIG. 43
FIG. 44
FIG. 45
FIG. 46
FIG. 47
FIG. 31
FIG. 34
FIG. 35
FIG. 30
FIG. 33
FIG. 36
FIG. 37
FIG. 32
FIG. 38
FIG. 39
FIG. 40
FIG. 48
FIG. 52
FIG. 53
FIG. 54
FIG. 51
FIG. 58
FIG. 59
FIG. 60
FIG. 57
FIG. 64
FIG. 63
FIG. 49
FIG. 50
FIG. 55
FIG. 56
FIG. 61
FIG. 62
FIG. 65
CENTRAL OFFICE COMMON CONTROL

United States Patent Office

3,250,859

Patented May 10, 1966

3,250,859

UNIVERSAL LINE CONCENTRATOR

Richard G. Fisher, Birmingham, Mich., assignor to American Telephone and Telegraph Company, New York, N.Y., a corporation of New York

Filed Dec. 31, 1962, Ser. No. 248,517
29 Claims. (Cl. 179—18)

This invention relates to telephone systems and more particularly to subscriber line concentrating systems.

Where subscribers are located a considerable distance from a telephone central office, the cost of wire facilities is appreciable, and the problem of providing them in sufficient quantity is a major one. For example, where a community has experienced unanticipated growth, the underground ducts which carry subscribers' cables are often fully utilized, and additional cable capacity can be provided only after major construction efforts have been undertaken.

It is well known that only a portion of a group of subscribers have a need for service at any one instant. Such requirements vary from subscriber group to subscriber group. However, traffic studies can readily develop representative service requirements of any group of subscribers.

Line concentrating systems are designed with the above-noted traffic considerations in mind, and in a line concentrator system a group of subscriber stations are connected to a telephone central office by a group of transmission paths which are fewer in number than the number of subscribers served. A line concentrating system includes apparatus for recognizing the transmission needs of a subscriber's line, and for establishing the required transmission and signaling paths between the subscriber and the telephone central office.

Subscriber line concentrators fall in two broad categories; namely, universal and nonuniversal. A universal line concentrator, although it may have optional internal wiring may generally be used with any of the well-known present-day telephone switching systems. A nonuniversal concentrator, however, is designed for use with only one particular type of telephone switching system.

In many line concentrating systems the supervision and control equipment is located at the central office and is included in the central office unit of the line concentrating system. The cost of this control equipment is generally a substantial part of the cost of the entire system. Many line concentrating systems may operate in conjunction with a particular central office with the various field units being located in different geographical positions. However, the central office unit of each line concentrating system is located in the central office. It thus becomes possible to provide a common control for operating with the central office unit of each line concentrating system. In this manner each individual line concentrating system shares a portion of the cost of the single common control, and the average cost of each system may be considerably reduced.

In certain prior art concentrating systems when one remote subscriber is connected to another served by the same unit, two trunks need be employed; each connecting one of the two subscribers to the central office where they are connected to each other through the central office switching equipment. As both subscribers are connected to the same remote unit it is possible to connect them directly to each other once the call is established, and thereby release the two priorly used trunks. In this manner the capacity of the system could be increased as these two trunks can now serve two other remote subscribers. Certain prior art circuits have been unable however to effect this type of connection. Control of

all connections and disconnections is generally provided by the central office unit, supervisory and switching information being transmitted from the central office unit to the field unit to establish or disestablish connections. If two remote subscribers are connected directly to each other through the field unit and there is no connection of either one to the central office via one of the inter-unit trunks, it is apparent that the central office unit is unable to supervise the connection at the remote unit. The lack of means to effect and supervise a direct connection of two remote subscribers to each other in the field unit has prevented certain prior art concentrators from increasing their capacity in this manner.

To effect an increased capacity in the manner described, it is not enough to be able to establish direct connections at the remote unit. It is also necessary to first detect when two subscribers served by the same unit should be connected directly to each other at the remote unit. Extensive logic and memory circuits could be used to detect this condition, but their cost is appreciable if not prohibitive.

It is a general object of this invention to provide an improved universal communication switching system wherein subscriber stations are selectively and individually connected to a telephone central office by a smaller number of common trunks.

More particularly, an object of this invention is the optimum utilization of electronic and electromechanical techniques whereby subscriber needs are more economically and efficiently served.

It is another object of this invention to provide common control equipment to operate in conjunction with a plurality of line concentrating systems serving the same central office.

It is a principal object of this invention to provide a concentrating system having fewer trunks between central office and field units than prior art systems having the same call capacity.

More particularly, it is an object of this invention to selectively directly connect any two subscribers served by the same remote unit to each other by means of a local trunk at the remote unit, and to provide supervision of the call at the remote unit.

It is another principal object of this invention to detect when two subscribers may be directly connected to each other at their remote unit without requiring extensive logic and memory circuits, but rather a scanning circuit that is more efficient and far less costly.

It is another object of this invention to enable the common control to verify that the central office and field units are establishing or disestablishing connections in accordance with instructions from the common control for more reliable operation.

These and other objects of the invention are attained in one illustrative embodiment wherein requests for service are handled on an electronic basis, and wherein the communication paths are established by electromechanical means. Each line concentrator of the invention comprises a central office unit which is located at the telephone central office and is connected to subscriber line circuits therein, and a field unit which is located some distance from the central office and is connected to subscriber stations in the region of the field unit. The operation of each line concentrator is controlled by a common control unit located in the central office, the single common control serving eight line concentrating systems in the illustrative embodiment. Requests for service at both the central office and field units are detected by electronic scanning circuits. Once a request for service has been detected, the connection between the subscriber station and its associated central office line circuit is effected

and maintained by electromechanical means contained in the particular line concentrator serving the subscriber.

The need to release a trunk in any of the eight line concentrators after the termination of a call is detected by an electronic trunk release scanner located in the central office common control which operates simultaneously with the line scanners rather than on an interleaved basis. Through the unique combined line and trunk scanning circuits employed in the system, subscriber service is efficiently and economically provided.

In certain prior art concentrating systems, to effect a call between two subscribers served by the same field unit two trunks must be used, each connecting a respective subscriber to the central office where the two trunks are connected to each other through the central office switching equipment. In the concentrating system of the invention, however, both subscribers served by and connected to the same remote unit are connected directly to each other. Both of the two trunks originally utilized for connecting the two subscribers to each other are released. A local trunk at the field unit is then substituted in place of the two originally used trunks connecting the central office and field units. Each subscriber is connected to one end of the local trunk, and thus two extra trunks become available to serve the remaining subscribers in the group. This permits a reduced number of trunks between the central office and remote units because various ones of the subscribers in the group served by the line concentrating system are provided with talking paths without requiring the use of inter-unit trunks. On the average, fewer subscribers must be connected via trunk cables to the central office units, and as a result fewer of these trunks need be included in the line concentrating equipment.

The central office common control scans every combination of two trunks in each of the eight units to detect the connection of any two trunks in the same group to each other. This scanning is interleaved with the trunk release scanning, and takes place simultaneously with line scanning. When the central office common control detects the connection to each other of any two trunks in the same one of the eight line concentrators, it operates on this particular concentrator to release the two trunks, and to connect the two subscribers at the field unit to each other by a local trunk. The common control also effects the connection of the subscribers' respective line circuits in the central office to each other by means of a local trunk in the central office unit of the particular concentrator, this connection being established for supervisory purposes, e.g., to provide busy tone for all incoming calls to either subscriber.

The common control detects the connection of two trunks serving the same central office and field units to each other through the central office switching equipment. Extensive logic and memory circuits are not required. The call is first established utilizing two inter-unit trunks. A scanning circuit then detects their connection to each other. A nonaudible tone is applied successively to each trunk. (The term "nonaudible tone" as used in the following description refers to a signal, preferably of a single frequency, to which the human ear is insensitive.) During the application of the tone to each trunk all other trunks in the same group are scanned for its appearance. If the tone is detected, the trunk on which it is applied, and the trunk on which it is detected are necessarily connected to each other. The two trunks are then released, and the local trunks employed. By first establishing two connections, both utilizing an inter-unit trunk, and then scanning pairs of trunks for possible interconnections, the use of extensive logic and memory circuits is avoided.

The field unit determines when the two subscribers on the local connection terminate their call. The field unit then initiates the release of the local connection, and notifies the common control to release the equivalent local connection in the respective central office unit. Because the field unit is capable of supervising local connections, not even one inter-unit speech trunk is required to connect the locally connected subscribers to the central office equipment; maximum economy is achieved.

It is a feature of this invention to scan subscriber lines and subscriber line circuits for service requests simultaneously; and to scan trunks for trunk release requirements, and pairs of trunks for possible interconnections.

It is another feature of this invention to scan pairs of trunks serving the same central office and field units for possible interconnections by successively applying a superaudible tone to each one of the trunks and scanning the remainder of the trunks in the same group for the appearance of the same tone.

It is another feature of this invention to scan trunks for release requests by applying the same superaudible tone to all links connected to line circuits requiring release, the tone appearing on those trunks requiring release.

It is another feature of this invention to provide means for connecting two subscriber lines served by the same field unit directly to each other in the field unit, and for releasing the two trunks originally serving them when it is determined by the common control that the two subscribers are connected to each other.

It is another feature of this invention to provide talking battery and supervisory circuits for the two subscriber lines connected directly to each other in the field unit.

It is another feature of this invention to provide means for directly connecting the two line circuits associated with the same two subscribers to each other through the central office line concentrator unit when the common control determines that they are connected to each other through the central office switching equipment.

It is another feature of this invention to provide means for enabling the direct connection supervisory equipment at the field unit to notify the common control of a release request by the locally connected subscriber lines, the common control releasing the direct connections in the field and central office units in response thereto.

It is another feature of this invention to provide local trunks in both field and central office units for establishing the direct connections.

It is another feature of this invention, if all the local trunks are busy, to establish local connections of subscriber lines and line circuits requiring them immediately after the release of a local trunk in each unit.

It is another feature of this invention to scan trunks for release requests and pairs of trunks for possible interconnections on an interleaved basis, and to so scan the trunks in only one plurality at any time.

It is another feature of this invention to enable the line scanning and interleaved trunk scanning to occur simultaneously.

It is still another feature of this invention to provide interconnections between trunks, links, and subscriber lines or line circuits in both field and central office units in such a manner that all connections are established or released without requiring the transmission of more than trunk identity information between central office and field units.

The above and other objects and features of the invention will be more readily understood from the following description in conjunction with the drawing, in which:

FIGS. 1A–1D are a general block diagram schematic of the concentrating system of the invention, the figures being arranged as shown in FIG. 1E;

FIGS. 2–29 are a schematic representation of a line concentrator field unit in accordance with the illustrative embodiment of the invention;

FIGS. 30–47 are a schematic representation of a plurality of line concentrator central office units in accordance with the illustrative embodiment of the invention;

FIGS. 48–65 are a schematic representation of the central office common control in accordance with the illustrative embodiment of the invention; and

FIG. 66 shows the arrangement of FIGS. 2 through 65.

The description of the illustrative embodiment of the line concentrating system of the invention will be presented in accordance with the following index:

	Column
I. General Description of Entire System	
A. Component Description of FIGS. 1A–1D	6
B. Examples of Scanning and Switching Sequences	10
(1) Regular Connection	10
(2) Local Connection	10
(3) Trunk Release	11
(4) Local Connection Release	12
II. Field Unit	
A. General Description	12
B. Switching Scheme at Field Unit	13
C. Switching Information Transmitted to Field Unit	18
(1) Regular Connection Switching Information	18
(2) Trunk Release Switching Information	19
(3) Local Connection Switching Information	20
(4) Local Connection Release Switching Information	22
D. Regular Connection	22
(1) Detailed Description of Field Unit Operation	22
(2) Summary of Signal Information Transmitted Between Central Office and Field Units for Regular Connection	43
E. Trunk Release	43
(1) Detailed Description of Field Unit Operation	43
(2) Summary of Signal Information Transmitted Between Central Office and Field Units for Trunk Release	46
F. Local Connection	46
(1) Detailed Description of Field Unit Operation	46
(2) Summary of Signal Information Transmitted Between Central Office and Field Units for Local Connection	53
G. Local Connection Release	53
(1) Detailed Description of Field Unit Operation	53
(2) Summary of Signal Information Transmitted Between Central Office and Field Units for Local Connection Release	58
III. Central Office Units and Common Control	
A. General Description	59
B. Switching Scheme of Each Central Office Unit	60
C. Switching Information Required for Central Office Unit Operation	60
(1) Regular Connection Switching Information	60
(2) Trunk Release Switching Information	61
(3) Local Connection Switching Information	61
(4) Local Connection Release Switching Information	61
D. Regular Connection—Detailed Description of Central Office Unit and Common Control Operations	61
E. Trunk Release—Detailed Description of Central Office Unit and Common Control Operations	83
F. Local Connection—Detailed Description of Central Office Unit and Common Control Operations	94
G. Local Connection Release—Detailed Description of Central Office Unit and Common Control Operations	111
IV. Epilogue	115

Although most of the sequences performed originate in the eight central office units and the common control, a description of one of the eight field units will be presented first. The eight central office units and the common control are so inter-related that they must be described together, as a result, a field unit, being considerably smaller and less complex, is a more convenient starting point. An analysis of the switching scheme of a field unit (IIB) and the switching information that must be transmitted to the field unit (IIC) will aid immeasurably in the understanding of the invention. Following this analysis the four detailed sequences of operations relating to the four respective functions of the field unit will be presented. Signal information is transmitted back and forth between the central office and field units for each type of connection to be established, or for each type of release to be effected. In the description of the field unit operation it will be assumed that the respective central office unit responds in the desired manner with the signal to be described below. A description of where and how these signals originate, however, will be deferred until Section III where the operations of the central office units and the common control will be described in detail. In order to more easily understand the manner in which the two ends of the system operate with each other, after the detailed description of each of the four sequences of operations in the field unit, a summary of the signal information transmitted back and forth between the central office and the field units will be presented. Thus, in describing the operation of the central office units and the common control the compatibility of the two ends of the system will become apparent by referring back to the summary of the transmitted signal information for each sequence.

I. GENERAL DESCRIPTION OF ENTIRE SYSTEM

A. Component description of FIGS. 1A–1D

Referring to FIGS. 1A–1D, a block diagram schematic of the line concentrating system of the invention is shown. Eight pairs of central office and field concentrator units are associated with central office **100**. Central office and field units 0 are shown in more detail than central office and field units 7, the other 6 pairs of units not being shown in the drawing.

Each pair of concentrator units serves 128 subscribers **112–**. The second number in each of the subscribers designations refers to the particular one of the eight field units serving the subscriber. The last number in each designation identifies the subscriber as one of 128 in the same group.

In central office **100** are shown line circuits **115**, each associated with a respective subscriber served by the central office. Certain ones of these line circuits, of which only three are shown, are connected directly via respective lines **103** to respective subscribers **102**. Others of these line circuits are associated with subscribers served by the line concentrating system of the invention. Each of these line circuits is connected to one of the central office units by a respective conductor group **105–**. The second number in each of the conductor designations **105–** identifies the particular central office unit serving the subscriber. The third numeral identifies the particular subscriber served by this unit.

The line concentrating system of the invention is universal in that it is compatible with many types of central offices. The requirement necessary for the compatibility of the illustrative embodiment of the invention with a central office is that the sleeve of each line circuit be maintained at a more negative potential in the normal condition, and at a more positive potential when the line circuit is connected to a calling party desiring to be connected to the associated subscriber, or when the line is in use.

The cables **101** represent inter-office trunks, intra-office trunks, etc. A connection of any subscriber served by the line concentrator system to any other telephone subscriber, whether or not the other subscriber is served by the same concentrator system or even by the same central office, is over various ones of cables **101**.

Connected between each central office and field unit pair are two control cables **109–C**. Signaling and switching information is transmitted back and forth between respective central office and field units over the tip and ring conductors in each of these cables. The second number in the designation of each control pair refers to the particular central office and field units served. The third number in each designation identifies each control pair as one of two.

Each line served by the concentration system is scanned at a rate of approximately four times per second. If a line wishes service in either direction, that is, the subscriber wishes to place a call or his line circuit is energized indicating an incoming call to him, the identity of the line is maintained registered in counter systems located in both the common control and the particular field unit serving the subscriber. If the subscriber desires service, his field unit notifies the respective central office unit, and through the central office unit the common control, of the service request. If an incoming call is being placed, the common control, through the respective central office unit, notifies the particular field unit over the control cables that a call is to be terminated to the particular subscriber. For a terminating call, the subscriber is connected by one of the 20 trunks serving his central office

and field units to his associated line circuit. The central office supplies ringing current in the ordinary fashion. In the case of a service request by the subscriber, the line concentrating system connects him to his line circuit, and the central office then supplies dial tone.

If the subscriber is calling another subscriber served by the same central office and field units, the sequence of operations is as previously described. The calling subscriber is first connected via one of the 20 trunks serving his field unit to his line circuit and he is supplied with dial tone. He then dials, in the ordinary manner, the number of his neighbor. Central office **100** connects this subscriber to his neighbor's line circuit which results in a call being offered to the respective central office unit. The central office common control **106** then establishes a connection to the second subscriber over a second one of the 20 trunks in the same group. The called party's telephone will ring from the central office ringing current in the usual manner, and when he answers the message register, AMA, or similar equipment associated with the calling party's line will function in the ordinary manner.

At the central office, while the common control scans all of the line circuits associated with subscribers served by the line concentrating system, a simultaneous and independent scan is made of all combinations of trunks serving the same central office and field units for a possible connection through the central office of one trunk to another. The trunk scanning circuit includes an 18 kc. oscillator which places this frequency separately on the tip and ring of each trunk in turn. While this frequency is placed on each trunk the other 19 trunks in the same group are scanned for the tone. If a connection has been established between one subscriber and another served by the same central office and field units, the 18 kc. tone will be transmitted over one of the trunks, through the central office switching equipment, and over the second of the trunks, and therefore be detected by the common control. The common control then causes these two trunks to be released, and the two subscribers to be connected to each other directly over one of the two local trunks **114**– serving the respective field unit. The second number in each of the local trunk designations refers to a particular field unit. The third number in the designation identifies the local trunk as one of two.

Two local trunks **113**–, bearing similar designations, serve each central office unit. It is necessary to not only connect the two subscribers to each other through their mutual field unit but to connect the two associated line circuits to each other through the central office unit as well. This is necessary in order that the central office be aware that each of the two subscriber lines is "busy" in the event that incoming calls are placed to either of the two subscribers. This local connection in the central office unit is maintained until the two locally-connected subscribers hang up.

The central office common control **106** is connected to each of the central office units by respective control cables **107**–. It is over the control paths in these cables that common control **106** controls the operation of each pair of central office and field units.

The scanning of trunks for release takes place simultaneously with line scanning for service requests, and is on an interleaved basis with the scanning of pairs of trunks to determine the connection of two trunks in the same group to each other. Regular release scanning involves the scanning of individual trunks to determine the on-hook condition of the subscriber previously connected to the trunk. When common control **106**– detects this condition it causes the central office and field units to release the particular trunk.

When subscribers on a local connection hang up their receivers, the particular field unit local trunk circuit previously used controls the notification of the respective central office unit over a control pair that a pair of local trunks, one in each unit, are to be released. This release is effected by common control **106**.

The switching system of each central office unit is similar to that shown in FIG. 1A for central office unit 0. Central office unit 0 contains two line switches and two trunk switches, A and B. Sixty-four of the line circuits are connected to line switch A, and 64 to line switch B. A plurality of links **173**– connects each line switch to its respective trunk switch. The twenty trunks serving central office unit 0 are connected to the two trunk switches. Six of these trunks are connected only to trunk switch A and thus only the first 64 line circuits are connectable to these trunks. Similarly six of the 20 trunks are connected only to trunk switch B and are thus connectable only to the second group of 64 line circuits. The remaining eight trunks are connected to both trunk switches and are thus connectable to all 128 line circuits. The designation **108–0A–1** identifies this trunk as being connected to trunk switch A in central office unit 0. Similar remarks apply to the trunks whose middle designations are **0B**. The eight trunks whose middle designations are **0AB** are the eight connected to both trunk switches.

Trunks **113–0–1** and **113–0–2** are the two local trunks associated with central office unit 0. When the common control determines that two subscribers, both served by field unit 0, are connected to each other through the central office switching equipment, the two trunks serving these subscribers are released. At this time the two respective line circuits are connected to one of the two local trunks in the respective central office unit. The connections through the line switches are not changed. Each line circuit is still connected to the same link to which it was priorly connected. The two links however are no longer connected to two of the 20 inter-unit trunks. Instead they are both connected to one of the two local trunks. For example, if local trunk **113–0–1** is idle the two line circuits are connected through one or both trunk switches to this trunk. If the two line circuits are served by different line switches it is seen that both links connected to these line circuits are connected to each other over local trunk **113–0–1**. If both line circuits are served by the same line switch, crosspoints associated with both links in the same trunk switch are operated, and both links are connected to local trunk **113–0–1**. It makes no difference whether the two line circuits are in the same or different trunk switches. Similarly, local trunk **113–0–2** is connectable to any two links serving the same or different pairs of line and trunk switches.

The switching plan in each of the eight field units is similar to that of the central office units. Each of the line switches serves 64 subscribers. Thus each subscriber can be connected to only one of the two trunk switches. From the trunk switch each subscriber can be connected to the associated central office unit over one of the six trunks serving only this trunk switch or one of the eight common trunks. The two local trunks in the field unit operate in the same manner as those in the central office unit.

Central office common control **106** is connected to each of the eight pairs of units by three sets of conductors. Conductor groups **120–0** thorugh **120–7** connect the 20 trunks serving each pair of units to the common control. The common control scans these trunks to detect both requests for regular releases and the connection of any two trunks servng the same units to each other through the central office switching equipment. Conductor groups **140–0** through **140–7** connect the 128 line circuits in each central office unit to the common control for the purpose of line scanning. The common control scans all line circuits to determine service requests originating at the central office. Conductor groups **107–0** through **107–7** are the control conductors connecting each of the central office units to the common control, and it is over these

conductors that all control signals are transmitted back and forth.

Each of line scanners **171–0** through **171–7** in the field concentrator units detects service requests originating at the remote units, and transmits this information over one of the two control conductors associated with the particular unit to the respective central office unit.

The blocks within common control **106** illustrate the general operation of the system. The common control provides three scanning sequences, the particular sequence performed at any time being determined by scanning sequence selector **137**. The scanning sequence selector is connected to each of the line scanners **138–0** through **138–7**, and these scanners under the control of selector **137** scan the line circuits for service requests. Scanning for service requests proceeds simultaneously in each of the eight pairs of units. At the same time that scanning circuits **138–0** through **138–7** scan the line circuits for service request, scanners **171–0** through **171–7** scan the subscriber lines for service requests. The scanning by the field unit scanners is controlled by signals transmitted over control conductors **109–0–1** through **109–7–1**. If one or more of the field unit line scanners detects a service request the signals are transmitted to the associated central office units over the same control conductors.

Scanning sequence selector **137** also controls the scanning for the connection of any two trunks served by the same unit to each other through the central office switching equipment. Conductors **136–0** through **136–7** control trunk scanners **132–0** through **132–7**. Trunk scanning is performed in only one pair of units at any one time and thus unit identifier **135** causes only one of these eight trunk scanners to operate. Each of the trunk scanners is provided with means for applying the tone of tone generator **130** to each of the 20 trunks serving the associated central office and field units. When the tone is applied to any one of the 20 trunks the trunk scanner scans the other 19 trunks for its detection. If the tone is applied to one trunk and detected on another by detector **131** the trunk on which the tone is applied is necessarily connected through the central office switching equipment to the trunk on which it is detected. The detection of the tone by detector **131** causes a local connection to be established.

The eight trunk scanners also control the scanning of trunks for trunk release requests. The signals on conductors **136–0** through **136–7** control the particular type of scanning that is performed by the trunk scanners, that is, either scanning for local connections or regular releases. Again, in the scanning for regular releases, unit identifier **135** determines which group of trunks is scanned. In the scanning sequence for regular releases it is not necessary to apply the tone to one trunk and scan the others for its appearance. As described in the detailed description it is only necessary to scan the 20 trunks for the tone appearance, the tone appearing on those trunks requiring release, and originating not on another trunk but rather in the central office unit itself. When detector **131** detects the tone the common control initiates a regular release sequence. Detector **131** detects a tone on one of the 20 trunks in the group being scanned during both regular release and local connecting scanning. In order for detector **131** to be made aware of the particular type of scanning in progress scanning sequence selector **137** notifies it over conductor **160**. In this manner the tone detected by detector **131** results in either a regular release or local connection switching sequence.

A request to release a local connection may be detected in only a field unit. A changed D.C. condition due to the hang up by either or both subscribers on the local connection may be detected only in the respective field unit as there are no trunks connecting the two locally connected subscribers to a central office unit. Local trunk supervisory circuits **150–0** through **150–7** supervise all local connections. When a request for the release of a local connection is detected a signal is transmitted over one of conductors **181–0** through **181–7** and one of respective control conductors **109–0–1** through **109–7–1** to the respective central office unit, and over the respective one of cables **107–0** through **107–7** to the common control. The common control then causes the release of the local connection in both central office and field units.

B. *Examples of scanning and switching sequences*

(1) REGULAR CONNECTION

The system operation may be best understood by considering a specific example of each of the four scanning and switching sequences. The first of these is the regular connection. Line scanners **171–0** through **17–7** operate simultaneously, and are controlled by signals transmitted over the respective control conductors **109–**. If subscribers **112–0–00** desires service, when his line is scanned by line scanner **171–0** signal is transmitted to central office unit 0 from geld unit 0. Central office unit 0 notifies the common control of the service request over cable **107–0**. The common control then selects the particular links in central office and field units 0 and the particular trunk which will serve the call. If links **172–0A–1** and **173–0A–1** are chosen together with trunk **108–0A–1**, the common control causes the appropriate signals to be transmitted to central office and field units 0 over cables **107–0**, **109–0–1**, and **109–0–2** for enabling the two units to operate their respective line and thunk switches A in the desired manner. Subscriber line **112–0–00** is connected in the field through line switch A to link **172–0A–1**, and through trunk switch A to trunk **108–0A–1**. The trunk is in turn connected in central office unit 0 through trunk switch A to link **173–0A–1**, and through line switch A to conductor group **105–0–00**. Thus, subscriber **112–0–00** is connected to his respective line circuit **115**. When the respective line circuit is energized, central office **100** supplies dial tone to subscriber **112–0–00** who then completes his call in the ordinary manner.

If the service request originates in the central office rather than at the field the request on conductor group **105–0–00** is detected by line scanner **138–0** in the common control. Again, the common control selects the particular links and trunk to be employed, and the connection is established in the same manner. The central office then supplies the ringing current.

(2) LOCAL CONNECTION

A local connection is required when another subscriber served by field unit 0 is talking to subscriber **112–0–00**. For example, subscriber **112–0–127** may be connected through line switch B in field unit 0 to link **172–0B–20**, and through trunk switch B to trunk **108–0AB–1**. This trunk may in turn be connected in central office unit 0 through trunk switch B, link **173–0B–20**, and line switch B to conductor group **105–0–127**. The two respective line circuits are connected to each other through two of the intra-office trunks **101**.

When the common control scans the trunk serving central office and field units 0 for local connections, scanning sequence selector **137** enables trunk scanner **132–0** over conductor **136–0**. At the same time the scanning sequence selector notifies detector **131** over conductor **160** that the scanning sequence in progress is for local connections. While the tone on conductor **133** is being applied over cable **120–0** to trunk **108–0A–1** the wiper connected to conductor **134** is successively connected over the same cable to the remaining 19 trunks serving central office and field units 0. When this wiper is connected to trunk **108–0AB–1** the tone is detected by detector **131**, which is thus made aware that trunks **108–0A–1** and **108–0AB–1** are connected to each other through central office **100**. The local connection switching sequence ensues. The common control first selects one of the two local trunks in each of central office and

field units 0. For example, local trunks **114–0–2** and **113–0–2** may be chosen. The control signals are transmitted along cable **107–0** to central office unit 0, and over control conductors **109–0–1** and **109–0–2** to field unit 0. The field unit does not release the connections through line switches A and B. The connections through the two trunk switches however are released, and trunks **108–0A–1** and **108–0AB–1** are no longer connected to respective links **172–0A–1** and **172–0B–20**. After the release of the two trunks, trunk switches A and B reoperate, and connect both links **172–0A–1** and **172–0B–20** to local trunk **114–0–2**. Subscribers **112–0–00** and **112–0–127** are thus locally connected through field unit 0. Talking battery and supervision of the call is provided by one of the two local trunk supervisory circuits **150–0**.

Central office unit 0 operates in a similar manner. The connections through line switches A and B are not disturbed. The connection through trunk switches A and B are released however, and trunks **108–0A–1** and **108–0AB–1** are released. The two trunk switches then reoperate, and connect local trunk **113–0–2** through the two trunk switches to links **173–0A–1** and **173–0B–20**. The two respective line circuits are thus locally connected to each other through central office unit 0. This connection enables the central office to be aware that each of the two respective subscriber lines is "busy" in the event that incoming calls are placed to either of the two subscribers.

The wipers in the block diagram are merely symbolic. The detailed scanning equipment will become apparent from the detailed description.

(3) TRUNK RELEASE

The trunk release scanning and switching sequence involves a subscriber connected through the concentrator system to his respective line circuit in the central office, the subscriber talking to a party not served by the same field unit. In such an event, at the termination of the call, central office **100** causes a different D.C. condition to appear on the respective conductor group **105–**. For example, subscriber **112–0–64** may be connected through line switch B in field unit 0, link **172–0B–1**, trunk switch B, trunk **108–0B–6**, trunk switch B in central office unit 0, link **173–0B–1**, line switch B, and conductors **105–0–64**, to his respective line circuit **115**. At the termination of the call the central office causes a different D.C. condition to appear on conductors **105–0–64**. During the regular release scanning sequence the tone is transmitted through cable **107–0** to central office unit 0. In a manner detailed below the tone appears on only those trunks connected through the switches in central office unit 0 to those of lines **105–** having thereon the changed D.C. condition. In the example under consideration the tone appears on trunk **108–0B–6**, the condition of conductors **105–0–64** to which this trunk is connected enabling the tone to pass to the trunk. When the trunks **108–0A–1** through **108–0B–6** are scanned for regular releases, scanning sequence selector **137** enables trunk scanner **132–0** over conductor **136–0**. Only the wiper connected to conductor **134** operates during the regular release scanning sequence. This wiper rotates and when it is connected to trunk **108–0B–6** the tone appears on conductor **134**. Detector **131** detects this tone, and because the control signal on conductor **160** at this time indicates that the scanning sequence in progress is for regular releases, the detector interprets the appearance of the tone as a release request by trunk **108–0B–6**.

The common control then transmits the necessary switching signals over cable **107–0** to central office unit 0, and over control conductors **109–0–1** and **109–0–2** to field unit 0. In the field, the connections of subscriber line **112–0–64** through line switch B to link **172–0B–1** is released. Similarly in trunk switch B the connection of this same link to trunk **108–0B–6** is released. In central office unit 0 link and trunk switches B similarly break the connections between trunk **108–0B–6** and link **173–0B–1**, and between link **173–0B–1** and conductor group **105–0–64**.

(4) LOCAL CONNECTION RELEASE

The fourth scanning and switching sequence involves the release of a local connection. In the example for establishing a local connection above, subscriber **112–0–00** was connected through the field unit line switch A, link **172–0A–1**, trunk switch A, local trunk **114–0–2**, trunk switch B, link **172–0B–20**, and line switch B to subscriber line **112–0–127**. There is no connection to central office unit 0, and thus the local connection release must be detected by the field unit. Local trunk supervisory circuits **150–0** detect a request for a release of a local connection when one or both of the parties involved hangs up. A signal is transmitted over conductors **181–0** and **109–0–1** to central office unit 0, and over cable **107–0** to the common control. The common control in turn now transmits the necessary switching information over cable **107–0** to central office unit 0, and over control conductors **109–0–1** and **109–0–2** to field unit 0. In the field unit all four switches break their connections to effect the release of the local connection. In central office unit 0 all four switches similarly break the necessary connections to release local trunk **113–0–2**, links **173–0A–1** and **173–0B–20**, and conductors **105–0–00** and **105–0–127**. Local trunks **114–0–2** and **113–0–2** are now available to establish another local connection if one is required.

II. FIELD UNIT

A. *General description*

An individual field unit is shown in FIGS. 2–29. The field unit serves 128 subscribers each of which is connected by respective tip and ring conductors to crossbar switches in the field unit. The field unit must perform four sequences of operations. The first is that sequence required to establish a regular connection of a subscriber to one of the 20 trunks extended to the respective central office unit. A regular connection is to be established if the subscriber desired service or an incoming call has energized his associated line circuit in the central office. In either event the field unit, responsive to signals transmitted over the two control cables connecting it to the respective central office unit, establishes a connection of the subscriber's line to an idle one of the 20 trunks serving the units.

The second function of the field unit relates to trunk release. When the central office common control detects a different D.C. condition on the trunk connected to the subscriber's line, an indication is made that the particular subscriber has hung up. The common control causes the crossbar switches in the central office unit to release. Signals are also sent over the control conductors to the field unit to likewise cause the crossbar switches in the field unit to release the connection.

The third sequence of operations to be performed by the field unit relates to the establishment of a local connection when the common control determines that two trunks serving the same central office and field units are connected to each other. Signals are transmitted to the field unit over the control conductors to release the two trunks, and to connect the two subscribers to each other over one of the two local trunks serving the field unit.

Finally, the fourth sequence of operations relates to the release of a local connection, that is, the hang-up by either subscriber on a local connection of his receiver. The field unit must release the local trunk circuit previously used for the connection, and notify and central office unit over a control path.

Information must be transmitted back and forth between central office and field units, this information vary-

ing for each sequence of operations to be performed. A complete understanding of the necessary signaling information to be transmitted for each type of connection or release may be best understood by first analyzing the switching scheme at the field unit.

B. *Switching scheme at field unit*

An understanding of the switching plan is a prerequisite to the comprehension of the detailed operation of the circuit. For this reason a description of the crossbar switches in the field unit will be presented at this point.

Each individual line concentrator of the invention serves 128 subscribers. These subscribers are divided into two groups, group A comprising subscribers 0 through 63, and group B comprising subscribers 64 through 127. Each remote unit includes A and B line switches, and A and B trunk switches. Referring to FIGS. 2–7, line switch A, serving subscribers 0 through 63, is shown. This switch contains 10 select magnets **18LSMA0–18LSMA9**, and 20 hold magnets **14LHA0–14LHA19**. These magnets are shown in dotted symbolic form only in FIGS. 2–7, the actual magnets and related circuitry being shown in detail in respective FIGS. 18 and 14. Each of the first eight horizontal levels, 0 through 7, serves eight particular subscribers. Horizontal level 0 serves subscribers 0, 1, 16, 17, 32, 33, 48 and 49 as shown in FIGS. 3 and 4; horizontal level 1 serves lines 2, 3, 18, 19, 34, 35, 50 and 51; etc. Only horizontal level 0 is shown in detail. Levels 1 through 6 are shown symbolically only. The respective lines served by horizontal levels 1 through 6 are designated in FIG. 4. Horizontal level 7 is shown in slightly more detail than levels 1 through 6. All of levels 1 through 7 are similar to level 0 but serve the particular lines designated on the drawing.

A sleeve lead is not extended to each individual subscriber. However, individual sleeve leads are associated with each of the 64 subscribers served by line switch A, these leads being necessary for supervisory purposes.

Twenty links, each comprising a tip and ring conductor, are shown entering the A line switch at the bottom of FIGS. 6 and 7. These links are divided into four groups; **G0**, **G1**, **G2** and **G3**. Each of the four groups contains five individual links. All five links in group **G0** are shown in FIG. 7, these links being **G0–1** through **G0–5**. Only the first and last links in each of groups **G1** through **G3** are shown in FIG. 6.

The 20 links connect line switch A to trunk switch A, shown in FIGS. 9–12, trunks being extended from trunk switch A to the central office unit. The 20 trunks connecting the central office and remote units similarly do not contain sleeve leads. However, sleeve leads are associated with each of these trunks at the remote unit and enter trunk switches A and B in a manner similar to the tip and ring conductors of each trunk. These sleeves are also necessary for supervisory and control functions. The 20 links connecting line switch A to trunk switch A similarly contain no sleeve leads. However, sleeve conductors are associated with the links as with the lines and trunks for similar reasons. Although the sleeve lead associated with a subscriber is never connected to the sleeve lead associated with a particular trunk as the 20 links contain no sleeve conductors, the sleeve leads control the supervision and switching of the entire circuit, and for this reason an understanding of the connections through the line and trunk switches is imperative.

Referring to FIGS. 6 and 7, it is seen that each link tip and ring conductor entering line switch A branches out into two vertical conductors. There are thus 40 groups of vertical conductors in line switch A, each containing a tip and ring conductor. Each of these 40 groups is provided with a sleeve lead, each of the sleeve leads being connected to a negative potential source. Line switch select magnets 8 and 9, **18LSMA8** and **18LSMA9**, are steering levels, and determine which one of each two groups of three vertical conductors each is connected to the link tip and ring conductors and to a negative source **702**. The simultaneous operation of select magnet 8 or 9, and one of the 20 hold magnets **14LHA0–14LHA19** establishes a connection. For example, the simultaneous operation of select magnet 8 and hold magnet **14LHA1** causes all contacts in contact group **703** to close. Thus the tip conductor of link **G0–2** is connected to conductor **704**, the ring conductor of this group is connected to conductor **705**, and the sleeve conductor **706** is connected to a negative potential source **702**. Only one of select magnets 8 or 9 is operated at any time and thus when connections are made to conductors **704–706**, each of the conductors **707–709** remains unconnected to a link tip or ring conductor, or to one of negative potential sources **702**. The simultaneous operation of a line switch steering level select magnet and a line switch hold magnet closes a particular group of three contacts in horizontal levels 8 or 9. The line switch steering level select magnet is then released but the contacts remain closed as long as the controlling line switch hold magnet remains operated.

The vertical lines in FIGS. 6 and 7, below terminals **701**, each represents an individual conductor. Above terminals **701**, each vertical line represents the vertical of a crossbar switch rather than a conductor. As in conventional crossbar switches a vertical conductor is associated with each vertical of the switch. This vertical conductor is connected to any one of the horizontal conductors associated with respective horizontals of the switch upon the operation of the particular crosspoint at their intersection. For example, when line switch select magnet **18LSMA0** operates simultaneously with line switch hold magnet **14LHA1** crosspoints **309** are operated. The tip conductor associated with line **L0** is thus connected to the vertical conductor associated with vertical **310**, and the tip of line **L1** is connected to the conductor associated with vertical **311**. One of these conductors is in turn connected through either conductor **704** or **707**, and one of the contacts in group **703** or **710** to the tip conductor **G0–2**, depending upon which one of select magnets 8 or 9 is operated. A similar connection is established between the ring conductor associated with line **L0** or **L1** and the ring conductor of link **G0–2**. The sleeve conductor associated with the same line is connected to a negative source **702**. Any connection of a line to a link is thus seen to require the operation of one of steering level select magnets 8 or 9, one of horizontal select magnets 0–7, and one of hold magnets **14LHA0** through **14LHA19**. The connection is maintained after the release of both select magnets until the hold magnet is de-energized.

Although the link conductors do not contain sleeve leads, the connection of a line to a link establishes the connection of one of negative sources **702** through the sleeve associated with the particular link being used to the sleeve lead associated with the particular line to which the link is connected. This results in the placing of a negative potential on the sleeve lead associated with any of the 64 lines when it is connected to a link.

None of the lines served by line switch A can be connected to all of the 20 links serving the same switch. It is seen in FIGS. 3 and 4 that of the eight lines associated with horizontal level 0, only lines **L0** and **L1** can be connected to the five links in group **G0**. Referring to horizontal level 7 it is seen that only lines **L14** and **L15** of the eight lines served by this horizontal can be connected to group **G0**. Similarly in horizontal level 1 only lines **L2** and **L3** can be connected to the links in group **G0**. Similar remarks apply to the lines served by horizontal levels 2 through 7. Lines **L0–L15** are the only lines that can be connected to the five links comprising group **G0**. Any of these sixteen lines can be connected to any of the five links **G0–1** through **G0–5** upon the simultaneous op-

eration of a particular one of the line switch select magnets **18LSMA0–18LSMA7**, one of steering level select magnets **18LSMA8** or **18LSMA9**, and one of line switch hold magnets **14LHA0–14LHA4**.

Referring to link group **G1**, in horizontal level 0 only lines **L16** and **L17** can be connected to the five links served by this group. Similarly in holizontal level 7 only lines **L30** and **L31** can be connected to links **G1–1** through **G1–5**. Similar remarks apply to horizontal levels 1 through 6. It is seen from FIGS. 2–7 that each of lines **L0–L15** can be connected to any one of the links **G0–1** through **G0–5**. Lines **L16–L31** can be connected only to links **G1–1** through **G1–5**. Similar remarks apply to lines **L32–L47** and links **G2–1** through **G2–5**, and lines **L48–L63** and links **G3–1** through **G3–5**. Thus, if connections are established between the five links in any group and five of the 16 lines served by this group, the remaining 11 subscribers served by the same links cannot obtain service. Furthermore, it is apparent that any line may be identified by a combination of a particular horizontal level, groups of links, and steering level. There are four groups of links, two steering levels and eight horizontal levels, providing a total of **64** combinations. For example, the operation of line switch select magnet 0, steering level select magnet 9, and any one of line hold magnets **14LHA0–14LHA4** (group **G0**) establishes a connection between line **L1** and the one link in group **G0** controlled by the particular hold magnet associated with this group that is operated. The hold magnet selected in the invention is always the first available in the group, that is, if hold magnet **14LHA0** is unoperated whenever line **L1** is to be connected to a link this hold magnet is operated. If hold magnet **14LHA0** is already operated, line **L1** is connected to link **G0–2** by the operation of hold magnet **14LHA1**, etc. If all five hold magnets **14LHA0–14LHA4** are operated when subscriber **L1** desires service, no path exists for line **L1** to be connected to one of the five links serving this line due to the fact that these links are already serving five of subscribers **L0** and **L2–L15**. Subscriber **L1** is not provided service until one of the five subscribers using links **G0–1** through **G0–5** releases his link.

Sleeve leads **S0**, **S1**, **S16**, **S17**, **S32**, **S33**, **S48** and **S49**, associated with horizontal level 0, are extended to the scanning circuit for line switch A shown in FIG. 8. Similarly, the sleeve leads associated with the eight lines served by each of the remaining seven horizontal levels are extended to this scanning circuit.

Line switch B, shown in FIG. 16, serves lines **L64** through **L127**. The switching plan for line switch B is similar to that of line switch A. Subscribers **L64** through **L79** can be connected only to the five links in group **G0** serving line switch B and to no others. Similar remarks apply to the remaining lines. As in line switch A each group of five links serves only 16 lines. Sleeve leads **S64** through **S127** in line switch B, associated with respective lines, are connected via cable **1608** to the scanning circuit **1600** for line switch B. This scanning circuit is similar to the scanning circuit **800** for line switch A.

The 20 links associated with line switch A, each comprising a tip and ring conductor, are connected via cable **601** to trunk switch A shown in FIGS. 9–12. Trunk switch A is similar to line switch A in that it contains 10 select magnets and 20 hold magnets. As in line switch A, the vertical and horizontal lines above terminals **1001** represent crossbar verticals and horizontals. Below these terminals the vertical and horizontal lines represent conductors. Each of trunk switch select magnets **21TSMA0-21TSMA6** operates upon two groups of conductors, each containing tip, ring and sleeve leads. Trunk switch select magnets **21TSMA8** and **21TSMA9** are steering levels and are analogous to line switch steering level select magnets **18LSMA8** and **18LSMA9**. Any one of the 20 links entering trunk switch B may be connected to any one of the 14 trunk groups shown in FIG. 9. A connection is established upon the simultaneous operation of one of select magnets 8 or 9, one of select magnets 0–6, and one of trunk hold magnets **13THA0–13THA19**. For example, the tip and ring conductors in link **G0–2** may be connected to the respective horizontal tip and ring conductors of trunk **9ATK0–9** upon the operation of trunk switch select magnet **21TSMA0**, trunk switch select magnet **21TSMA9**, and trunk switch hold magnet **13THA1**. These tip and ring conductors are extended to the central office via trunk **9A0**. The numeral 8 or 9 after one of the designations **9ATK0–** through **9ATK6–** indicates which of the steering level select magnets has caused the connection of a link to the particular trunk.

The 20 links, and the 14 trunks on FIG. 9, entering trunk switch A do not contain sleeve leads. However, a sleeve lead is associated with each link and each trunk. It is seen that any one of the 20 sleeve conductors **12SAG0–1** through **12SAG3–5** associated with the 20 links may be connected through trunk switch A to sleeve leads associated with respective horizontals. These connections are made for supervisory and switching purposes.

In trunk switch A select magnet **21TSMA7** does not control the connection of a link to one of the trunks extended to the central office. Instead trunk switch select magnet 7 controls the connection of one or more links to the two local trunks **1100–** and **1101–**. It is these local trunks that connect subscribers served by the same remote unit to each other thereby releasing trunks normally required to connect them to the central office. Trunk switch select magnet **21TSMA7** controls the crosspoints in tip-ring-sleeve group **1100–** and tip-ring-sleeve group **1101–**.

The tip and ring conductors of any link, as well as the respective one of sleeve leads **12SAG0–1** through **12SAG3–5**, may be connected to the respective tip, ring, and sleeve conductors of either groups **1100–** or **1101–** depending upon which of steering level trunk switch select magnets 8 or 9 operates. The tip and ring conductors of each link are connected to respective tip and ring conductors in either group **1100–** or **1101–** through respective ones of resistors **1230** or **1130**. The sleeve leads are connected directly to each other. For example, consider that it is necessary to connect link **G0–3** to local trunk **1101–**. Upon the simultaneous operation of trunk switch select magnets **21TSMA9** and **21TSMA7**, and hold magnet **13THA2** all of contacts **1231–1236** close. It is seen that the tip conductor of link **G0–3** is connected directly through contacts controlled by trunk switch select magnets 9 and 7 and one of resistors **1230** to tip conductor **1101–T**. Similarly, the ring conductor of link **G0–3** is connected through contacts controlled by select magnets 9 and 7 and one of resistors **1230** to ring conductor **1101–R**. The sleeve conductor associated with link **G0–3**, conductor **12SAG0–3**, is connected directly to the sleeve conductor **1101–S** through contacts controlled by trunk switch select magnets 9 and 7.

It should be noted that any one of the 20 links of trunk switch A may be connected to either one of the two local trunks **1100–** or **1101–** depending upon which hold magnet operates, and which one of select magnets 8 or 9 operates. The connection of a link to a local trunk can only be established when trunk switch select magnet **21TSMA7** operates. Thus the operation of any one of select magnets 0–6 with the simultaneous operation of a particular hold magnet and one of select magnets 8 or 9 establishes a connection of any of the 20 links to any of the 14 trunks of trunk switch A extended to the central office. The operation select magnet 7 instead of one of select magnets 0–6 establishes a connection of any of the 20 links to either of the two local trunks.

Trunk switch B shown symbolically in FIG. 15 is similar to trunk switch A. Any one of subscribers 64 through 127 can be connected through line switch B to particular ones of the 20 links connecting line switch B and trunk switch B. Through trunk switch B the 20 links may be connected to any one of the 14 trunks

15BTK0–8 through 15BTK6–9, or to either of the two local trunks 1500 or 1501.

The tip, ring and sleeve conductors of local trunk 1500 are connected to the respective tip, ring and sleeve conductors of local trunk 1100– by conductors 15TX0, 15RX0, and 15SX0. The tip, ring and sleeve conductors of local trunk 1501 are similarly connected to the respective tip, ring and sleeve conductors of local trunk 1101– by conductors 15TX1, 15RX1, and 15SX1. Two local connections may be established. The two local connections may both involve subscribers served by trunk switch A or trunk switch B, or subscribers served by different trunk switches. For example, if two subscribers served by line and trunk switches A are to be connected to each other the two links to which these subscribers are connected and which enter trunk switch A must be connected to each other. By operating the two respective trunk switch hold magnets, trunk switch select magnet 21TSMA7, and trunk switch select magnet 21TSMA8, the two subscribers are connected to local trunk 1100–. If trunk switch select magnet 21TSMA9 is operated rather than trunk switch select magnet 21TSMA8 they are both connected to local trunk 1101–. The two tip conductors of both subscribers are connected through different resistors to the tip of the particular local trunk used. Similar remarks apply to the two ring conductors. The two sleeve conductors are both connected directly to the sleeve of the local trunk. In a similar manner two subscribers served by line and trunk switches B may both be connected to either of the two local trunks.

If the first local connection established connects two subscribers served by line and trunk switches A to local trunk 1101– due to the operation of trunk switch select magnet 21TSMA9 in trunk switch A, to connect two subscribers served by line and trunk switches B to each other, trunk switch select magnet 21TSMAB8 in trunk switch B is operated rather than trunk switch select magnet 21TSMB9. This causes these two subscribers to be connected to local trunk 1501. In a similar manner if trunk switch select magnet 21TSMA8 is operated in trunk switch A, trunk switch select magnet 21TSMB9 is operated in trunk switch B. This insures that both local connections are not connected to each other by conductors 15TX0–15SX1.

It is also possible, as stated above, to establish a local connection between subscribers served by different trunk switches. To establish such a connection the same one of trunk switch select magnets 8 or 9 is operated in both trunk switches. For example, if trunk switch select magnets 8 are operated in both trunk switches the two subscribers are both connected to conductors 15TX0, 15RX0, and 15SX0. To establish another connection between two subcribers served by different trunk switches, trunk switch select magnets 9 would then be operated to connect them to conductors 15TX1, 15RX1, and 15SX1. It is also possible to establish at the same time a local connection of two subscribers served by the same trunk switch, and another local connection of two subscribers served by different trunk switches. For example, two subscribers served by trunk switch A might both be connected to local trunk 1100– due to the operation of trunk switch select magnet 21TSMA8 in trunk switch A. To then establish a connection of two subscribers served by different trunk switches it is merely necessary to operate trunk switch select magnets 9 in both trunk switches to connect both subscribers to conductors 15TX1, 15RX1, and 15SX1.

It is thus seen that two local connections may be established at any time, these connections involving any two combinations of any two of the 128 subscribers whether or not the subscribers are served by the same line and trunk switches.

In trunk switch A any of the 20 links can be connected to any of the 14 trunks 9ATK0–8 through 9ATK6–9. Similarly any of the 20 links serving trunk switch B can be connected to any of the 14 trunks 15BTK0–8 through 15BTK6–9. As seen in FIG. 9, respective ones of trunks 9ATK3–8 through 9ATK6–9 are connected to respective ones of trunks 15BTK3–8 through 15BTK6–9. Eight of the twenty trunks extended to the central office unit, trunks 9AB12–9AB19, are connected to horizontals in both trunk switches. The remaining six horizontal tip and ring pairs in trunk switch A are extended directly to the central office unit, and are designated 9A0–9A5. The remaining six horizontal tip and ring pairs in trunk switch B are also connected directly to the central office unit, and are designated 9B0–9B5. Of the total 20 tip and ring pairs connecting the central office and remote units, six are individual to trunk switch A, six are individual to trunk switch B, and eight are common to both. Subscribers 0 through 63 may be connected through line and trunk switches A to any one of the 14 trunks 9A0–9A5 and 9AB12–9AB19. The 64 subscribers served by line and trunk switches B may be connected to any one of the 14 trunks 9B0–9B5 and 9AB12–9AB19.

The eight sleeve conductors associated with the eight mutual trunks are similarly connected to each other. These sleeves are connected to each other, and to respective ones of sleeve leads 9SAB12–9SAB19. The six sleeve leads 9SA0–9SA5 are individual to trunk switch A. The six sleeve leads 9SB0–9SB5 are individual to trunk switch B. Thus a total of 20 sleeve leads 9SA0–9SAB19 can be connected through the two trunk switches to respective sleeve leads associated wtih the verticals of the two trunk switches. The 20 link sleeve leads associated with each trunk switch are extended via respective cables 1240 and 1540 to respective trunk switch hold magnet circuits. The trunk switch hold magnet circuit for trunk switch A is shown in FIG. 13. The trunk switch hold magnet circuit for trunk switch B is shown symbolically in FIG. 15. In a similar manner only the line switch hold magnet circuit for line switch A is shown in detail in FIG. 14. The hold magnet circuit for line switch B is shown symbolically only in FIG. 16 as its operation is similar to that shown in FIG. 14. It should be remembered that the hold magnets for line and trunk switches A are shown in detail in FIGS. 14 and 13, respectively. These hold magnets as well as the select magnets are shown in dotted outline only in the respective line and trunk switches. This symbolic notation is included to more clearly identify the particular crosspoints controlled by respective hold magnets. The separation has been effected in order to reduce the complexity of the drawing. Similar remarks apply to the select and hold magnets of the B switches.

C. *Switching information transmitted to field unit*

At the field unit four types of switching operations take place. The first of these is the ordinary connection of any subscriber through line and trunk crossbar switches to one of the 20 trunks extended to the central office. This is referred to as a regular connection. The second type of switching sequence relates to the release of this regular connection when a subscriber hangs up. The third switching sequence relates to the establishment of a local connection through one of the two local trunks when it is determined that two of the 128 subscribers served by the same field unit are connected to each other. The establishment of this connection also involves the release of the two trunks priorly used for connecting these two subscribers to the central office. The fourth switching sequence involves the release of a local connection when one or both of the two parties served by the field unit and connected to each other have terminated the call. The necessary information that must be supplied to the field unit for the control of these four sequences will be presented briefly at this point as this information is intimately related to the switching plan employed at the field unit and described immediately above.

(1) REGULAR CONNECTION SWITCHING INFORMATION

A regular connection is a connection of a remote subscriber, through field line and trunk crossbar switches to

one of the 20 trunks, which in turn is connected through central office trunk and line crossbar switches to the respective line circuit of the subscriber. The service request may originate from either the remote subscriber or from a calling party energizing the remote subscriber's line circuit at the central office. Two control pairs, each comprising tip and ring conductors, connect the central office unit to the remote unit. The common control at the central office supplies successive series of pulses to the remote unit. Each series comprises 64 pulses, all of the same polarity. The first series of pulses is positive in polarity, the next series of 64 is negative in polarity, etc. A 64 state counter in the remote unit controls the scanning of the 128 local subscribers. The 64 positive pulses cause lines 0 through 63 to be scanned. The 64 negative pulses control the scanning of lines 64 through 127 by the same 64 state counter.

In the central office unit a similar scanning of the 128 line equipments takes place. When either the central office or field unit detects a service request, a signal is sent to the other unit notifying it that the subscriber's line and his respective line circuit must be connected to each other. Both central office and field units have the identity of the particular subscriber stored in their respective counters, the counters being stopped from advancing responsive to a service request in either direction. Both units thus immediately know the identity of the subscriber and the line switch serving him. As each subscriber is served by only one link group both units similarly know the identity of which one of the eight groups of links must be involved in the connection. Each unit must select one of the five links in this group. The lowest numbered idle link is always chosen and as the same numbered links in each unit are always used together, both units, on their own, select the link to be used. Each link at the field, however, may be connected to any one of 14 trunks through the respective field trunk switch. A particular trunk must be identified. The central office common control identifies the particular trunk to be employed and transmits this information to the field unit. The identity of the trunk to be employed is the only switching information that must be transmitted to the field unit.

Four control conductors extend from the central office to the field unit, these conductors being designated **9T1**, **9R1**, **9T2**, and **9R2**. Both positive and negative potentials may be applied by the common control at the central office to each of the four control conductors serving each pair of central office and field units. A particular trunk is identified by signals applied to two of the four control conductors. As eight signals may be transmitted in all (positive and negative potentials on each of the four control conductors) it is seen that a particular trunk is identified by a 2-out-of-8 code.

When the central office common control determines which trunk is to be employed for the connection to be established, the 2-out-of-8 code is transmitted to the field unit. The central office and field units each connect the same numbered link to the same one of the 14 possible trunks. The particular trunk selection procedure will be described below with reference to the common control.

It is thus seen that for a regular connection the only information that need be transmitted from the central office unit to the field unit is the identity of a trunk.

(2) TRUNK RELEASE SWITCHING INFORMATION

A trunk release is to take place whenever a subscriber is to be disconnected from his line equipment, i.e., whenever a regular connection is to be broken. Although scanning for service requests necessarily occurs at both central office and field units, trunk release scanning takes place only at the central office. When either the local subscriber or the party connected to his line circuit in the central office hangs up, the D.C. condition on the tip and ring conductors of the trunk used changes. This is detected by trunk release scanning equipment in the central office. The common control causes the release of the crosspoints in the central office unit line and trunk crossbar switches connecting the subscriber's line circuit to one of the 20 trunks. For the field unit crosspoints to release the only information that must be transmitted to the field unit is the identity of the trunk whose release is to be effected. Again, the 2-out-of-8 code is employed and the identity of the trunk is stored in the field unit. Referring to trunk switch A, the crosspoints connect any of the 14 sleeve leads **9SA0–9SA5** and **9SAB12** through **9SAB19** to any of the 20 sleeve leads **12SAG0–1** through **12SAG3–5** associated with respective ones of the 20 links. The 20 leads **12SAG0–1** through **12SAG3–5** are connected directly via cable **1240** to respective ones of the 20 windings of the trunk switch hold magnets in trunk switch A, shown in FIG. 13. The other end of the coil of each trunk switch hold magnet is connected by one of conductors **1302–0** through **1302–19** directly to one end of the winding of the similarly numbered line switch hold magnet. The other end of the winding of each line switch hold magnet is connected to conductor **14HG**. Any connection of a line to a trunk through the line and trunk crossbar switches always results in the same numbered line and trunk switch hold magnets being energized together. The field unit is provided with means for energizing the particular one of sleeve leads **9SA0–9SA5** or **9SAB12–9SAB19** associated with the trunk whose identity has been transmitted to the field unit. The energizing potential on the particular one of these 14 sleeve leads is transmitted through trunk switch A and along cable pair **1240** to the particular trunk switch hold magnet winding holding the connection of the identified trunk to a link. The trunk switch hold magnet releases thereby releasing the particular trunk whose sleeve lead was energized responsive to the identifying 2-out-of-8 code, and the link priorly used. The line switch hold magnet similarly de-energizes and releases the same link from the particular subscriber connected to this link. Similar remarks apply to the release of one of the 14 trunks connected to a subscriber line through line and trunk switches B.

It is important to note that for a trunk release it is only necessary to transmit the identity of the trunk to be released. The field unit need not know the identity of the particular subscriber connected to this trunk nor the identity of the link employed. The sleeve of the trunk is energized and through a trunk switch causes the deenergization of the particular line and trunk switch hold magnets connecting the subscriber to the identified trunk. When the hold magnets release, the connection is broken. Although the subscriber lines, the links, and the trunks do not have sleeve leads the necessity of establishing sleeve connections through the trunk switches is apparent. It is the connection of one of sleeve conductors **12SAG0–1** through **12SAG3–5** to any one of sleeve conductors **9SA0–9SA5** or **9SAB12–9SAB19**, or the connection of any one of sleeve conductors **15SBG0–1** through **15SBG3–5** to any one of sleeve conductors **9SB0–9SB5** or **9SAB12–9SAB19** through respective trunk switches A and B that enables the particular line and trunk switch hold magnets (links) serving any trunk to be identified. The identification of the trunk to be released results in the release of the two hold magnets establishing the trunk connection although the identity of these hold magnets is not transmitted from the central office unit to the remote unit. For a trunk release only the identity of the particular trunk need be supplied to the field unit.

(3) LOCAL CONNECTION SWITCHING INFORMATION

A local connection, utilizing conductors **15TX0**, **15RX0**, and **15SX0**, or conductors **15TX1**, **15RX1**, and **15SX1** is to be made whenever two remote subscribers served by the same field unit are connected to each other. When the calling party first requests service he is

connected by a particular one of the 20 trunks to his line circuit in the central office. He then dials the number of the other local subscriber and the central office establishes a connection from the line circuit of the first subscriber to the line circuit of the second subscriber in the central office. The line scanning circuit in the central office unit detects the service request at the second subscriber's line circuit and connects the line circuit of the second subscriber to the second subscriber over a second one of the 20 trunks. Ringing current is then supplied to the second subscriber who answers the call.

The central office common control continuously scans the 20 trunks serving each concentrator to determine a connection of any two of these trunks to each other through the central office switching equipment. When the common control determines that two trunks, both in the same one of the eight line concentrators, are connected to each other, further scanning is inhibited, and the common control operates on the particular concentrator to connect the two subscribers directly to each other via one of the two local trunks.

The common control transmits to the field unit the identity of the two trunks connected to each other. This is the only information required for the establishment of a local connection. In a manner similar to the release of a trunk described in the preceding section, the two 2-out-of-8 codes transmitted cause current to flow through two of sleeve leads **9SA0–9SAB19**, and through various crosspoints in one or both of the trunk switches to the windings of the two trunk switch hold magnets establishing the connections to the two trunks connected to each other. The line switch hold magnets are prevented from releasing in this case, and only the trunk switch hold magnets release. Trunk switch select magnets 7 in both switches are operated. Trunk switch select magnets 8 in both trunk switches or trunk switch select magnets 9 in both switches are also operated. If no local connections are already established or a connection on the second local trunk is already established trunk switch select magnets 8 operate. If one local connection has already been established by select magnets 8, trunk switch select magnets 9 in both switches are operated. The two particular trunk switch hold magnets priorly released are then reoperated. They are operated over new paths rather than those through the two trunk switches as the sleeve crosspoints in these switches have opened when the hold magnets controlling them were originally released. However, as the two trunk switch hold magnets involved in the connection have already been identified during the release operation, the field unit needs no further information to reoperate these two hold magnets. When the two trunk switch hold magnets were released, both of the trunks extended to the central office, released. When the two hold magnets reoperate it is seen that both subscribers are connected via the same links to which they are already connected to one of the two local trunks **15TX0–15SX0** or **15TX1–15SX1** through the trunk crossbar switches.

It is important to note that it makes no difference whether the two subscribers are served by the same line and trunk switches or different line and trunk switches. If no local connection already exists, trunk switch select magnets 8 in both trunk switches A and B operate. The two subscribers are connected through either the same trunk switch or different trunk switches to local trunk **15TX0–15SX0**. On the other hand, if a local connection already exists, the previously unoperated trunk switch select magnet 8 or 9 in each switch operates and the two subscribers are connected through one or both trunk switches to the other local trunk when the two originally released trunk switch hold magnets are reoperated.

Thus it is unnecessary to transmit any information from the central office unit to the field unit other than the identity of the two trunks to which the two subscribers are respectively connected. The identity of the two subscribers need not be determined. Because the two trunk switch hold magnets originally serving these subscribers are identified by sleeve connections through the trunk switches, the hold magnets are automatically released and reoperated without requiring the transmission of further information. And because of the unique connections of all links to the two local trunks via the contacts controlled by trunk switch select magnets 8 and 9 in both trunk switches, the two subscribers are automatically connected to the same local trunk as a result of the operation of similarly designated trunk switch select magnets 8 or 9 in both trunk switches.

In both a regular connection and a trunk release the only information transmitted from the central office to the remote unit is the identity of a particular one of the 20 trunks. For a local connection the only information transmitted is the identity of two trunks, the identity of the second trunk being transmitted after the identity of the first as described in detail below.

(4) LOCAL CONNECTION RELEASE SWITCHING INFORMATION

The fourth type of switching operation is that of releasing a local trunk when one of the two subscribers on a local connection hangs up. This can only be detected by the remote unit as neither subscriber is connected to central office equipment. When either subscriber (or both) hangs up, the tip and ring of the local trunk to which he is connected assume a different D.C. condition which controls further release sequences. The sleeve of the local trunk is energized, and as it is extended through one or both of the trunk switches to the four hold magnets maintaining the local connection, as in an ordinary trunk release, the line and trunk switch hold magnets serving each subscriber release, and the local connection is broken. No information need be transmitted from the central office to the remote unit. Instead it is the remote unit which transmits a signal to the central office unit identifying which of the two local trunks is to be released in order that the central office unit become aware of this fact for supervision purposes at the central office.

D. *Regular connection*

(1) DETAILED DESCRIPTION OF FIELD UNIT OPERATION

Line scanning for service requests proceeds simultaneously at the central office and field units. A counter is situated in the common control and is operated synchronously with counters in each of the field units. Thus each field unit scans the 128 lines it serves, all field units scanning simultaneously. The common control at the central office controls the simultaneous scanning of the 128 line circuits associated with each of the central office units. The first field unit or central office unit desiring service causes the common control to operate solely on that pair. The common control operation will be discussed below. At the present time the operation of an individual field unit, disclosed in FIGS. 2–29, will be described.

Two control cables, each comprising tip and ring conductors, are extended between the field unit and the associated central office unit. Pulses are transmitted by the central office unit along the tip and ring of the first pair to the field unit to control line scanning at the field. The scan pulses are transmitted along conductors **9T1** and **9R1**, and along cable **901** to FIG. 28. The pulses are transmitted through normally closed contacts **28LR–1** and **28LR–2**, along respective conductors **24ID–1** and **24ID–3**, cable **2802**, through normally closed contacts **25AUX–1** and **25AUX–2**, and conductors **22TIC** and **22RIC** to transformer **2601**. Thus under normal scanning conditions the pulses transmitted along control conductors **9T1** and **9R1** operate through transformer **2601** on transistors **26PDA** and **26PDB**.

As previously described, subscribers 0 through 63 are connected to line switch A with the remaining subscrib-

ers 64 through 127 being connected to line switch B. Six-stage counter **2400** is a 64-count counter. The scanning pulses transmitted along conductors **9T1** and **9R1** step this counter and thus control the scanning of 64 successive lines. The central office transmits 64 successive pulses of positive polarity followed by 64 pulses of negative polarity, etc. Every series of pulses steps counter **2400**. The particular polarity of each group of 64 pulses determines which of the two groups of 64 subscriber lines is scanned.

Transistors **26PDA** and **26PDB** are both normally conducting. The bases of both of these transistors are connected to ground through respective resistors **2680** and **2681**. Both emitters are connected to positive potential source **2602** and as the emitter-base junctions are forward biased, both transistors conduct in the absence of scanning pulses on conductors **22TIC** and **22RIC**.

Transistors **26PMA** and **26PMB** are both normally off. Each of these two transistors is held off by the conduction of the respective one of transistors **26PDA** and **26PDB**.

Transistors **26PMA** and **26PMB** in combination with transistor **26M**, which is normally conducting, form mutually exclusive monostable circuits, that is, at certain times in the cycle of system operation, when transistor **26PMA** is turned on, this transistor in combination with transistor **26M** comprises a monostable circuit, while at other times in the operating cycle transistor **26PMB** in combination with transistor **26M** similarly forms a monostable circuit. As long as transistors **26PDA** and **26PDB** are in the off state, transistor **26M** is fully conducting. It is held in the on state by the forward biasing of the emitter-base junction over a path which includes negative source **2606**, resistors **2607** and **2609**, diode **2610**, and the base-emitter junction of the transistor returned to ground. When transistor **26PMA** is turned on, a positive pulse is transmitted through diode **2605** and capacitor **2611** to reverse bias diode **2610**. When this diode is reverse biased, the base of transistor **26M** is connected to positive source **2613** through resistor **2612** and the transistor is turned off. The voltage at the collector of transistor **26M** approaches that of negative source **2615**. In that pulses transmitted from the central office to the remote unit may be mutilated in transmission and, therefore, may be of irregular shape and duration when they arrive at the field unit, the timing of the monostable circuit which comprises transistors **26PMA** and **26M** during the scanning of lines in the A group or transistors **26PMB** and **26M** during the scanning of lines in the B group must be independent of the waveshape of the incoming pulses from the central office. Positive pulses from the central office across conductors **22TIC** and **22RIC** cause transistor **26PDA** to be turned off. This turns transistor **26PMA** on for the duration of the monostable operation. Similarly, negative pulses turn off transistor **26PDB** which similarly triggers the monostable circuit comprising transistors **26PMB** and **26M**. In this manner the pulses generated by the monostable circuits are made independent of the waveshape of the incoming pulses and, therefore, independent of the operations of transistors **26PDA** and **26PDB**.

Isolation of the above-mentioned mutually exclusive monostable circuits from the operation of the pulse detection transistors **26PDA** and **26PDB** is accomplished by making the timing of these circuits dependent upon the time required for recovery of capacitor **2611**. When transistor **26M** is turned off its collector no longer draws current from source **2608** through respective resistor-diode pairs **2624** and **2620**, **2623** and **2622**. Under this condition current flows from source **2608** through resistor **2624** and diode **2619** to the collector of transistor **26PMA** if a positive pulse turned off transistor **26PDA**, or through resistor **2623** and diode **2621** to the collector of transistor **26PMB** if the scan pulse was negative in polarity and originally turned off transistor **26PDB**. In addition, when transistor **26PMA** is turned on and transistor **26M** is turned off, negative current from source **2608** through resistor **2623** and diode **2621** joins the negative current from the same source through resistor **2617**. This combined negative current flows to the base of transistor **26PMA** and is great enough to keep it turned on even when transistor **26PDA** turns back on. When transistor **26PMB** is turned on and transistor **26M** turns off, it is the current from source **2608** through resistor **2624** and diode **2619**, and through resistor **2618**, to the base of transistor **26PMB** which sustains transistor **26PMB** when transistor **26PDB** turns back on. When the initial scan pulse has terminated, that one of transistors **26PDA** or **26PDB**, which was initially turned off, now turns on. But the monostable operation continues independent of this condition.

Capacitor **2611** begins to charge when transistor **26M** turns off with current flowing from source **2606**, through resistors **2607** and **2609**, capacitor **2611**, and emitter diode **2605** to the collector of transistor **26PMA**, or diode **2604** to the collector of transistor **26PMB**. During the charging period, diode **2610** is reverse biased and positive source **2613** holds transistor **26M** off. However, after one millisecond has elapsed, capacitor **2611** has charged sufficiently from source **2606** to forward bias diode **2610**. At this time a negative potential is once again applied to the base of transistor **26M** which turns on. This transistor again draws current through diodes **2620** and **2622** and respective resistors **2624** and **2623**, and the voltage at its collector becomes less negative. A positive pulse is thus generated on conductor **26P** which is connected by cable **2679** to the first stage of counter **2400**. The count of this counter is advanced by one digit. With transistor **26M** turned on once again, current no longer flows through diodes **2619** and **2621**. The previously conducting one of transistors **26PMA** or **26PMB** turns off and the monostable operation is completed.

Thus counter **2400** is not advanced until one millisecond has elapsed after the initial application of the scan pulse. Counter **2400** contains a count reprsentative of the line being scanned at both the central office and field units. In a manner to be described below, the scan pulse causes the line represented by the count in the counter to be scanned. The count of the counter must not be advanced until after the scan. For this reason, the advance pulse on conductor **26P** is delayed for one millisecond.

In the event that the line being scanned desires service, transistor **26M** is held off by other means for a period exceeding the one millisecond of monostable operation. It is held off until after the subscriber desiring service is connected to his line circuit through the line concentrator system. In this manner the advance pulse is not applied to conductor **26P** until after service is provided to the subscriber requesting it. This operation will be described below but for the moment it will be assumed that the line being scanned desires no service and counter **2400** is advanced after the one millisecond of monostable operation during which the field unit determines the absence of a service request. This scanning procedure continues in the manner previously described. For a first 64 pulses of positive polarity the monostable circuit operation comprises transistors **6PMA** and **26M**. The next 64 monostable operations are a result of the conduction of transistor **26PMB** and the turning off of transistor **26M**. In either case, counter **2400** is advanced after each monostable operation, as the advance pulses on conductor **26P** are supplied independent of the polarity of the scan pulse.

Prior to the transmission of the first scan pulse in any group of **64**, counter **2400** is automatically reset. It counts from 0 through 63, and the 64th pulse of the preceding group causes the scanning of subscriber line 63 and after one millisecond advances counter **2400** which places it in the 0 or reset state. When a line at either the central office or field units desires service, counters at both the central office and field units are inhibited from operating,

counter 2400 being inhibited by holding transistor 26M off in a manner to be described below. After a regular connection has been established, scanning could proceed from where it previously left off. However, it is desirable to reset the counters in both the central office and field units and to scan the other group beginning with the first line in it. The resetting of both counters, one in each unit, insures that both end units are in synchronism with each oher. In addition, even when no service requests are detected, it is desirable to reset the counters after the 64th line in each group has been scanned. Counter 2400, if operating properly, will indeed be reset at this time because after the 64th line in the group is scanned by the 6th pulse, the pulse on conductor 26P advances counter 2400 to the initial or reset state. To further insure that the counters at both ends are in synchronism, means are provided to reset counter 2400 after the scan of either group of lines.

The reset transistor 26R is the means for resetting counter 2400. Pulses from the central office are transmitted at the rate of approximately 500 per second. As stated heretofore, the transmitted pulse is distorted and a reshaped one millisecond pulse is provided by one of the two monostable circuits. During this one millisecond, a pulse must be transmitted to the central office by the field unit indicating a service request, or a pulse must arrive from the central office to the field unit similarly indicating a service request. In the event that neither unit has detected a service request, a new scan pulse arrives 2 milliseconds after the previous pulse.

After the transmission of a group of 64 scan pulses, the central office ceases to transmit pulses for 5 milliseconds. Conductors 9T1 and 9R1 are maintained at ground potential as they are connected through conductors 22TIC and 22RIC, the primary of transformer 2601, conductor 2651, and the primary of transformer 2652 to ground. The reset transistor 25R′ is normally off. In a manner now to be described, it is turned on and pulses the reset conductor 26R only when no scan pulses are received for 2.5 milliseconds. During the transmission of a group of 64 pulses, pulses occur every two milliseconds. Thus, transistor 26R does not turn on during the transmission of a group of scan pulses. However, after the 64th pulse, no more pulses are received for 5 milliseconds, transistor 26R turns on, and applies a pulse to reset conductor 26R′ to reset counter 2400 in the event the counter is not already reset after it has been stepped by the 64th pulse on conductor 26P. In a similar manner, after the establishment of a regular connection, the central office does not resume with the transmission of a new group of 64 scan pulses for 125 milliseconds. During the establishment of the connection, transistor 26R is held off as is transistor 26M. After the establishment of the connection, however, as has been explained above, transistor 26M turns on once again and advances the count. In a similar manner, transistor 26R is enabled to turn on after 2.5 milliseconds because no scan pulses are transmitted along control cable 1, and counter 2400 is reset.

When either of transistors 26PMA or 26PMB is turned on, current flows through respective diodes 2625 or 2626 to the junction of capacitor 2633, resistor 2636 and the diodes. The positive potential charges capacitor 2633 through resistor 2637. After transistor 26M turns off, the positive pulse from that one of transistors 26PMA or 26PMB which was turned on no longer appears at the junction. Transistor 26R is normally held in a non-conducting state by potential source 2627 which is greater in magnitude than source 2630 and as a result causes diode 2629 to conduct and maintain an approximately .5 volt bias across the emitter-base junction of transistor 26R. After the initial charging pulse through one of diodes 2625 or 2626, capacitor 2633 begins to discharge. Current flows from negative source 2635 through resistor 2636, the capacitor, and diode 2638 to negative source 2634, the magnitude of source 2635 being greater than that of source 2634. The junction becomes less positive. Diode 2632 is a reverse threshold diode which conducts when the reverse voltage thereacross exceeds a predetermined magnitude. If no new positive current pulses are supplied by transistors 26PMA and 26PMB through respective diodes 2625 and 2626, the junction attains a negative voltage sufficient to break down diode 2632. This negative potential of the junction is applied through resistor 2631 and diode 2632 to the base of transistor 26R which consequently turns on. The time required for capacitor 2633 to discharge sufficiently to break down diode 2632 is 2.5 milliseconds. The capacitor begins to discharge when the turned on one of transistors 26PMA or 26PMB turns off. Since either of these transistors remains on for one millisecond after a scan pulse is received, if scan pulses are not received for 3.5 milliseconds, capacitor 2633 discharges sufficiently to turn on transistor 26R. The collector of transistor 26R supplies a positive pulse to reset conductor 26R′ which is connected to the reset terminal of each stage of counter 2400. As a result, all stages of the counter reset. Tranisor 26R remains on due to the potential of source 2635 which is applied to its base through resistors 2636 and 2631, and diode 2632. It turns off when one of transistors 26PMA or 26PMB turns on, at which time diode 2632 ceases to conduct.

In summary, transistors 26PDA and 26PDB respond to pulses of opposite polarities which are transmitted from the central office unit to the field unit over the first control pair, conductors 9T1 and 9R1, and in response thereto, trigger the monostable circuit comprising transistors 26PMA and 26M, or the monostable circuit comprising transistors 26PMB and 26M. Transistor 26M is normally conducting and turns off whenever one of transistors 26PMA or 26PMB is turned on. After the time-out of either monostable circuit, a positive pulse is developed on conductor 26P which advances the count of counter 2400. Transistor 26R is normally on but remains off as long as either of transistors 26PMA or 26PMB turns on within prescribed limits of time, approximately once every 3.5 milliseconds. If the time between pulses exceeds this period, which it does after the establishment of a regular connection, or after any of the other three switching sequences, or after the transmission of the 64th scan pulse in any group, transistor 26R is turned on and causes all stages of counter 2400 to reset.

Either end unit may detect a service request on the line being scanned. In response thereto the other unit must be notified and transistors 26M and 26R must be held off until the regular connection is completed. After this time, transistor 26M must turn on, and capacitor 2633 must discharge to turn transistor 26R on. The resulting potential on conductor 26R′, occurring 2.5 milliseconds after the pulse on conductor 26P, must reset counter 2400.

The scanning of a particular line at the field unit occurs during the one millisecond of operation of either monostable circuit. The turning on of either transistors 26PMA or 26PMB supplies a positive pulse to respective conductors 26PA and 26PB. This pulse is extended through respective capacitors along cable 2603 and through respective resistors 2701 and 2702 to the base of either transistor 27A or 27B. Negative source 2706 is smaller in magnitude than negative source 2705, and transistors 27A and 27B are normally maintained non-conducting. The one millisecond positive pulse on either of conductors 26PA or 26PB causes the respective transistor to be turned on.

Referring to line switch A shown in FIGS. 2–7, it is seen that any line may be identified by specifying the line switch A or B in which it is contained, the particular one of the four groups of links to which it may be connected, the horizontal in which it is contained, and its steering level 8 or 9. These four identifying characteristics of any line are determined in the following manner:

(1) The line switch, A or B, is identified as a result of the conduction of transistor 27A, or the conduction of transistor 27B.

(2) The group is identified by stages 2 and 3 of counter 2400. These two stages together indicate one of groups 0 through 3.

(3) The steering level is identified by the state of stage 1 of the counter. A 0 represents level 8 and a 1 represents level 9.

(4) Stages 4, 5 and 6 of counter 2400 identify the particular one of eight horizontals containing the line to be scanned.

The eight AND gates 2404 are of the type which produce a negative output pulse only if both inputs are negative in polarity. The output is positive if either input is positive. Each counter stage applies a positive potential to its 0 output and a negative potential to its 1 output when it is in the 0 state. Similarly, when in the 1 state, a positive potential is applied to the 1 output, and a negative potential to the 0 output. When stages 2 and 3 are both 0, it is seen that only conductor 24G0 of conductors 24G0–24G3 has applied to it a negative potential as its respective AND gate is the only one whose both inputs are connected to negative outputs of stages 2 and 3. Similarly, when stages 2 and 3 are in respective 0 and 1 states (a binary 2), only conductor 24G2 has a negative potential applied to it.

The four conductors 24G0 through 24G3 are extended via cable 2413 to FIG. 27. On this figure are shown in addition to transistors 27A and 27B, transistors 27A80 through 27B93. The last digit in each of these designations refers to one of four groups of links. The next to last digit in each designation refers to the steering level 8 or 9. The third digit from the end refers to line switch A or B. Each of these transistors is normally non-conducting. Referring to a particular one of these transistors, 27A92, it is seen that for the transistor to conduct the base must be made negative in potential. The base of transistor 27A92 is connected to resistor 2707 and diode 2708. If a positive potential is applied to conductor 2709, this potential is transmitted through resistor 2707 and transistor 27A92 is held off. Similarly, a positive potential on conductor 2710 is transmitted through diode 2708 to the base of the transistor and it is held off. A positive potential on conductor 24G2 is normally applied through resistor 2711 and diode 2712 to conductor 2709 and in itself is sufficient to keep transistor 27A92 off. Similarly, the positive potential of source 2713 applied through resistors 2714 and 2715 to conductor 2709 is similarly in itself sufficient to keep transistor 27A92 non-conducting. And the positive potential normally on conductor 24L9 and applied through resistor 2734 to conductor 2710 is similarly sufficient to reverse bias transistor 27A92. However, if conductor 24L9 is negative in potential, conductor 24G2 is similarly negative in potential, and transistor 27A conducts and applies a negative potential to conductor 2709 through resistor 2715, the three inhibiting potentials applied to transistor 27A92 are removed and the transistor conducts. Transistor 27A becomes active when an A scan pulse is received from the central office. Conductor 24G2 is negative in potential when stages 2 and 3 of counter 2400 are in the 0 and 1 states respectively. And conductor 24L9, connected directly to the 0 output of stage 1 of counter 2400, is made negative in potential when this stage is in the 1 state. Thus transistor 27A92 is made active only when the line to be scanned is in the A switch, in link group 2, and connected to a link by steering level 9. When the transistor conducts, a positive pulse is applied to conductor 27GHA92.

Source 2713 inhibits the eight transistors 27A80 through 27A93, and source 2716 inhibits the eight transistors 27B80 through 27B93. Conductor 24G0 inhibits transistors 27A80, 27A90, 27B80 and 27B90. Similarly conductors 24G1 through 24G3 each inhibits four respective transistors. And each of conductors 24L8 and 24L9 inhibits eight of the transistors. At any one time only one of transistors 27A and 27B conducts, only one of the conductors 24G0 through 24G3 is negative in potential, and only one of conductors 24L8 and 24L9 is likewise negative in potential. As a result, only one of the 16 transistors 27A80–27B93 supplies a positive pulse to respective output conductors 27GHA80–27GHB93. These 16 conductors are extended along cable 2717 to the scanning circuit 800 for line switch A, and to the scanning circuit 1600 for line switch B. The eight conductors having the letter A in their designations are extended to scanning circuit 800 and the eight conductors having the letter B in their designations are extended to scanning circuit 1600. Only one of the 16 conductors is positive in potential at any given instant.

Each of these 16 conductors identifies a particular combination of one of the two line switches, one of the two steering levels in that switch, and one of the four groups of links in the same switch. To identify a particular line it is only necessary to further designate one of the eight horizontals in the same switch. A particular horizontal is identified by the combination of one of the transistors in FIG. 24 whose output conductors are designated 24H0–24H7. Normally negative sources 2402 maintain conductors 24H0–24H7 at negative potentials. Only one of the eight transistors conducts at any one time, the particular transistor being determined by stages 4, 5 and 6 of counter 2400. For one of these transistors to conduct its base must be made negative in potential. Normally, negative source 2408 applies a negative potential through resistor 2409 and one of resistors 2406 to the base of each of the four uppermost transistors. Similarly, this same potential is applied through resistor 2410 and resistor 2407 to the bases of the lowermost four transistors. This negative potential, however, is insufficient in itself to cause the transistors to conduct if a positive potential is applied through resistors 2405 from the outputs of the AND gates 2404 connected to stages 4 and 5. If a negative potential is applied to the base of a particular one of the transistors by both source 2408 and the output of one of the AND gates 2404, the transistor conducts.

It is readily seen that each of the possible eight states of stages 4, 5 and 6 causes a respective one of the transistors to conduct. For example, consider the binary number 010(2) to be contained within these stages. As output 1 of stage 6 is negative in potential, diode 2411 is reverse biased and potential 2408 is as usual applied through resistors 2406 to the bases of the four uppermost transistors. However, output 0 of this stage is positive in potential and diode 2412 is forward biased. The potential applied to the base of each of the four lowermost transistors is no longer derived from negative source 2408 but rather from the positive output of stage 6. As a result, the four lowermost transistors are inhibited from operating even if the respective AND gates apply negative potentials to the output conductors connected to their bases. The particular one of the four uppermost transistors that is operated is determined by the four AND gates 2404 connected to stages 4 and 5 of the counter. With the digit 0 stored in stage 4, output 1 is negative in potential. The digit 1 stored in stage 5 causes output 0 to be negative in potential. The only one of AND gates 2404 connected to stages 4 and 5 which is energized is the second from the bottom. A negative potential is thus applied from the output of this AND gate of the base of transistor connected to conductor 24H2 and the base of the transistor connected to conductor 24H6. Only the first-mentioned transistor conducts, however, as stage 6 is in the 0 state. As a result, only conductor 24H2 has applied to it a positive potential.

It is seen that as stages 4, 5 and 6 are advanced, a positive potential is successively applied to one of conductors 24H0–24H7. These eight conductors are extended via

cable **2415** to FIG. 8. The particular one of these conductors which is energized identifies a horizontal, and together with that of the 16 conductors **27GHA80–27GHB93** which is energized completely identifies a particular one of the 128 lines.

Scanning circuit **800**, individual to line switch A, contains eight networks **801–0** through **801–7**. Each of the eight conductors **27GHA80–27GHA93** is associated with a respective one of these networks, **27GHA80** being associated with network **801–0**, as shown, **27GHA90** being associated with network **801–1**, etc. Each of the networks **801–** is associated with eight of the 64 lines served by line switch A. The sleeves of lines 0, 2, 4, 6, 8, 10, 12 and 14 are associated with network **801–0**. Each of these sleeves is contained in a different horizontal level and it is seen that each network **801–** is associated with one sleeve in each of the eight horizontals of line switch A.

Referring to FIG. 3 and in particular to sleeve S0 it is seen that it is connected through resistors **301, 302** and **303** to negative source **304**. If the associated subscriber is on-hook, the potential of negative source **304** is applied directly to sleeve S0. If on the other hand he is off-hook, current flows from source **305** through resistor **306**, the tip and ring conductors and resistor **303** to negative source **304**. As a result, the junction of resistors **302** and **303** is positive in potential and a positive potential is applied to sleeve S0. In network **801–0** a diode **807** is in series with each of the eight sleeve conductors. Only if the associated subscriber desires service is the respective diode forward biased as the sleeve is positive in potential. A positive pulse applied on conductor **27GHA80** is transmitted through only those of capacitors **803** and diode **807** associated with subscribers requesting service.

Each of the eight networks **801–0** through **801–7** in scanning circuit **800** is associated with eight lines, each in a different horizontal. Only one of the eight conductors **27GHA80–27GHA93**, has applied to it a positive pulse at any one time. As a result, the pulse is transmitted through the diodes associated with subscribers requesting service in only one of the eight networks.

Similar remarks apply to scanning circuit **160**. Only one of conductors **27GHB80–27GHB93** applies a positive pulse to the scanning circuit at any one time and as a result this pulse is transmitted through the diodes associated with lines desiring service in only one of the eight networks in scanning circuit **160** analogous to networks **801–0** through **801–7**. And as only one of the 16 conductors **27GHA80–27GHB93** is energized at any one time, only one of the 16 diode networks transmits pulses to its output leads.

Each of the 16 diode networks has in it an output conductor associated with a line in horizontal 0 of one of the two switches. Similarly, each of the diode networks has in it an output conductor associated with a line in each of the horizontals in one of the two switches. All of the output conductors associated with lines in horizontals 0 of either switch are coupled together by conductor **850–0**. Similar remarks apply to the other seven output conductors of each of the diode networks. Cable **860** extends these coupling conductors from scanning circuit **800** to scanning circuit **160**. Since only one of the 16 diode networks may be energized at any one time, although 16 output conductors in all are coupled to conductor **870–0**, it is seen that a pulse on this conductor can only result from a service request of a subscriber associated with the particular one of the 16 diode networks enworks.

It is possible that when a positive pulse is applied to one of the 16 conductors **27GHA80–27GHB93** all eight of conductors **870–0** through **870–7** will contain thereon positive pulses. This is possible if all eight lines associated with the particular one of the **16** diode networks energized, desires service. Only one line is scanned at any one time and the final step in selecting the particular line to be scanned arises from the particular one of the eight conductors **24H0** through **24H7** which is positive in potential. Each of diodes **880** is connected through conductor **881** and resistor **2663** to a positive potential, this potential being a result of the voltage dividing network comprising source **2661** and resistors **2662** and **2664**. As each of conductors **24H0** through **24H7** is normally negative in potential, each of the diodes **880** is normally reverse biased. The only diode which is forward biased is that one connected to the particular one of conductors **24H0–24H7** which is positive in potential. This diode is forward biased, and if a positive pulse appears on the associated one of conductors **870–** it is transmitted through the diodes to conductor **881**. The positive pulse on this conductor represents a service request originating at the field unit.

A specific example will aid in the understanding of the line scanning circuit. Suppose that line S0 is being scanned and the associated subscriber desires service, diode **807** in series with conductor **870–0** and in circuit **801–0** being forward biased when he goes off-hook. When a positive pulse is applied to conductor **27GHA80** the pulse is transmitted through this diode. It is also transmitted through all others of diodes **807** associated with subscribers 2, 4, 6, 8, 10, 12 and 14 who may desire service at this time. However, the only one of diodes **880** which is forward biased at this time is that diode in series with conductor **870–0** which is forward biased by the positive potential on conductor **24H0**. As a result, the pulse originating on conductor **27GHA80** is transmitted along conductor **870–0** to conductor **881**.

The entire scanning process originates with the application of a positive pulse to one of the 16 conductors **27GHA80–27GHB93**. The positive pulse originates from the conduction of the associated one of transistors **27A80–27B93**. There is one situation however where line scanning is to be inhibited. As discussed above, every line in either line switch can be connected to the five links in only one of the four groups. If the five links in a particular group are all busy it is impossible to provide service to a sixth of the subscribers served by this group of links. As a result, scanning must be inhibited for all lines in this group as long as the five links remain busy. Were this not done, the common control might attempt to establish a connection that is impossible at this time.

Referring to FIG. 27, eight leads **27GBA0–27GBB3** are shown connected through respective diodes to the bases of transistors **27A80–27B93**. The last digit in each of these eight designations refers to one of the four groups of links, and the A or B designation refers to one of the two pairs of line and trunk switches. It is seen that if a positive potential is applied, for example, to conductor **27GBA2**, transistors **27AB82** and **27AB92** are inhibited from operating. These two transistors, although normally operated when lines in the A switch and served by link group G2 are being scanned, are inhibited from operating when the five links in group G2 in line and trunk switches A are already all in use. In this manner, lines for which service cannot be supplied are not scanned to begin with.

The eight conductors **27GBA0–27GBB3** are extended along cable **2718** to FIGS. 13 and 15. Conductors **27GBA0–27GBA3** are extended to FIG. 13 containing therein the hold magnets of trunk switch A. Conductors **27GBB0–27GBB3** are similarly extended to the trunk switch hold magnet circuit for trunk switch B. If the five hold magnets in any one of the eight groups of links are all busy, the respective one of conductors **27GBA0–27GBB3** is energized, and the resulting positive potential inhibts the respective two of transistors **27A80–27B93** from operating. This is accomplished by means of a contact chain controlled by the various trunk switch hold magnets. Positive potential source **1700** is connected through respective resistors **1705** to each of the eight leads **17LHA0–17LHB3**. Conductors **17LHA0–17LHA3**

are extended via cable **1701** to FIG. 13, with the other four conductors associated with respective ones of the four links in line and trunk switches B being extended to FIG. 15. Referring to FIG. 13, it is seen that if the five hold magnets **13THA0–13THA4**, all associated with the five links in group **G0** of trunk switch A, are operated, all of contacts **13THA0–1** through **13THA4–1** are closed. The positive potential on conductor **17LHA0** is extended directly to conductor **27GBA0**, and transistors **27A80** and **27A90** are inhibited from operating. Similarly, if all of trunk hold magnets **13THA5–13THA9** are operated, the five sets of contacts **13THA5–1** through **13THA9–1** are closed, the positive potential on conductor **17LHA1** is extended to conductor **27GBA1**, and transistors **27B81** and **27B91** are inhibited from operating. Similar remarks apply to the remaining two contact chains in FIG. 13 controlled by respective trunk hold magnets **13THA10–13THA14**, and **13THA15–13THA19**. In a similar manner, four analogous contact chains are in the hold magnet circuit for trunk switch B, and if all five magnets in one of the four groups of links in trunk and line switches B are operated the positive potentials on conductors **17LHB0–17LHB3** are extended to respective conductors **27GBB0–27GBB3**, and prevent the respective two of transistors **27B80–27B93** from operating.

The positive pulse on conductor **881** indicates that the particular line identified by the count in 64-count counter **2400** and the particular one of the operated transistors **26PMA** or **26PMB** desires service. This pulse must "freeze" counter **2400** and the operated one of the two transistors by maintaining both of transistors **26M** and **26R** in the nonconducting state. This pulse must also cause a signal to be transmitted to the central office unit notifying it of a service request at the field unit. The counter in the central office common control has in it the same count as that in counter **2400**, and is thus made aware of the particular line requesting service.

While scanning is in progress, transistor **26AF1** is conducting and transistor **26AF** is not. The emitter of transistor **26AF1** is connected directly to positive potential source **2661**. The base of this transistor is connected through resistors **2671** and **2682** to negative source **2683**. The emitter-base junction is forward biased and the transistor conducts. Collector current causes a positive potential to be developed at the junction of resistors **2657** and **2658**, this positive potential reverse biasing the emitter-base junction of transistor **26AF**.

The positive pulse on conductor **881** is effective to turn off transistor **26AF1** and thereby turn on transistor **26AF**. The positive pulse is transmitted through capacitors **2666** and **2665** to the base of transistor **26AF1** and reverse biases the emitter-base junction of this transistor. With transistor **26AF1** off, the junction of resistors **2657** and **2658** is negative in potential due to source **2683**. Transistor **26AF** turns on and a positive pulse appears at its collector. This potential is extended through diode **2668**, resistor **2670**, and capacitor **2665** to the base of transistor **26AF1** maintaining this transistor nonconducting. After capacitor **2665** changes, the potential at the junction of resistors **2670**, **2682**, and **2671** is sufficient when extended through resistor **2671** to turn transistor **26AF1** back on. The charging period is 150 milliseconds. Capacitor **2660** is provided to filter out noise appearing on condutcor **881**.

The positive pulse on the collector of transistor **26AF** is transmitted through resistor **2684** to the secondary of transformer **2652**. A positive pulse is induced across the primary of this transformer connected by conductor **2651** to the primary of transformer **2601**. A positive pulse thus appears on each of conductors **26RIC** and **26TIC**. This simplex pulse is transmitted from the field unit to the central office unit over control conductors **9T1** and **9R1** and indicates a request for service from the field unit.

When it is the central office unit that determines a request to terminate a call to one of the subscribers served by the line concentrating system, a positive simplex pulse is transmitted from the central office unit to the field unit over the simplex of the first control pair. This signal appears as a positive pulse across the secondary of transformer **2652**. It is transmitted through resistor **2684**, diode **2668**, resistor **2670** and capacitor **2665** to the base of transistor **26AF1**. This transistor is turned off in the same manner as when a service request pulse originating at the field unit appears on conductor **881**. Transistor **26AF1** remains off, and transistor **26AF** turns on and remains on until capacitor **2665** charges.

Diodes **2655** and **2656** are included for protective purposes. The collector of transistor **26AF** is normally maintained at the potential of source **2653** whose magnitude is the same as that of source **2654**. Excessive positive pulses cause diode **2656** to conduct. Any negative pulses cause diode **2655** to conduct. In this manner, excessive pulses from external sources, e.g., lightning, are prevented from damaging transistors **26AF** and **26AF1**.

Thus a service request at either end unit causes transistor **26AF** to remain on until capacitor **2665** charges. The discharge time of this capacitor is 150 milliseconds. Transistor **26M** is normally off for only one millisecond after the scan pulse is transmitted over the tip and ring conductors of the first control pair from the central office unit. This transistor must remain off, however, responsive to the detection of a service request. An advance pulse on conductor **26P** must not be produced because the count in counter **2400** must be frozen to identify the line requiring service. The count must be maintained until after the connection is completed. Transistor **26M** is held off for the 150 milliseconds during which transistor **26AF** conducts. The positive collector voltage is transmitted directly through diodes **2668** and **2676**, and resistor **2609** to the junction of diode **2610** and capacitor **2611**. The capacitor cannot discharge over its normal discharge path comprising source **2606**, resistors **2607** and **2609**, capacitor **2611**, and resistor **2641**. This discharge cannot take place until after transistor **26AF** turns off once again.

The central office does not transmit further scan pulses responsive to a service request at either end unit. Normally, transistor **26R** would time-out after 2.5 milliseconds and a reset pulse would appear on conductor **26R'**. This must be prevented to preserve the count in counter **2400**. As transistor **26R** times out 2.5 milliseconds after that one of the operated transistors **26PMA** or **26PMB** turns off, it is apparent that because the monostable operation is stretched for a period of 150 milliseconds by maintaining transistor **26M** off, transistor **26R** cannot begin to time-out and no reset pulse is generated.

The field unit operates under the philosophy that all action within the field unit should be primarily under the command of the central office unit. Thus upon the occurrence of a request for service by one of the subscribers served by the concentrator, the field unit takes steps to temporarily halt the scanning of lines therein. However, the field unit in the absence of additional orders from the central office unit will withdraw from control and will become once again subservient to further orders from the central office. Under this philosophy the field unit must not disable itself for prolonged periods of time. For this reason the circuitry comprising transistors **26AF1** and **26AF** is arranged to restore after 150 milliseconds, the charging time of capacitor **2665**. After this time period, counter **2400** is advanced, and if no further scan pulses are received it is reset. The field unit is thus prepared to accept scanning pulses or other orders from the central office. In the normal course of events, once a service request has been transmitted from the field unit to the central office unit, the central office unit transmits additional control signals to effect a regular connection. As the establishment of this connection may require more than 150 milliseconds, additional means must be pro-

vided to freeze counter **2400** in response to the transmission of additional control signals by the central office unit which thus recognizes the service request. This means will be described below.

The field unit knows the identity of the line requiring service by the count stored in counter **2400**. Before it can establish the required connections through its line and trunk switches, it must obtain the identity of the trunk which is to be employed from the central office unit. Communication, for purposes of control, between the central office unit and the field unit is accomplished over the first and second control pairs comprising conductors **9T1**, **9R1**, and **9T2**, and **9R2**. During the scanning cycle, conductors **9T1** and **9R1** are connected through respective break contacts **28LR–1** and **28LR–2**, conductors **24ID–1** and **24ID–3**, contacts **25AUX–1** and **25AUX–2**, and conductors **22TIC** and **22RIC** to the primary of coil **2601**. Scan pulses are transmitted over this path to the transformer to operate respective transistors **26PDA** and **26PDB**. The identity of the trunk to be used is transmitted from the central office unit to the field unit and is stored in two of the eight identification relays **22ID–1** through **22ID–8**. Th tip and ring conductors of control pair 1 must be transferred from the primary of transformer **2601** to the coils of various ones of these identification relays in order that identification signals on these conductors operate appropriate identification relays.

The tip and ring conductors of control pair 2 during scanning are connected via conductors **9T2** and **9R2**, respective break contacts **25C1–1** and **25C1–2**, diodes **2501** and **2502**, break contacts **25AUX–3** and **25AUX–4**, and the coils of respective relays **25A** and **25B** to ground. During scanning no potentials are applied at the central office unit to each of conductors **9T2** and **9R2**. The central office unit, responsive to a service request from either unit and after the transmission of the simplex pulse in either direction, applies a large negative potential to either conductor **9T2** or conductor **9R2**, and a smaller negative potential to the other. The large potential is applied to conductor **9T2** if the line requiring service is in group A, and is applied to conductor **9R2** if the line is in group B. The associated one of relays **25A** or **25B** operates when this potential is applied. The other of these relays, having a smaller potential applied to its winding, does not operate. Either of these relays operating causes the auxiliary relay **25AUX** to be operated. Contacts **25A–1** or **25B–1**, in closing, connect sources **2533** and **2534** to each other through the coil of relay **25AUX**. This relay thus operates.

The **25A** or **25B** relay operating indicates that the central office unit has recognized the service request and is proceeding to cause the establishment of the regular connection. Thus transistors **26M** and **26R** must be held off for more than the 150 milliseconds of conduction of transistor **26AF**. Relay **25A** or **25B** in operating closes contacts **25A–2** or **25B–2** on FIG. 26. The closing of either of these sets of contacts connects positive source **2677** through resistors **2678** and **2609** to the junction of diode **2610** and capacitor **2611**. This positive potential prevents the discharge of capacitor **2611** independent of transistor **26AF**. This positive potential from source **2677** is maintained until after the operated **25A** or **25B** relay releases, which does not occur until after the regular connection is completed. Thus transistors **26M** and **26R** are held off for the duration of the switching sequence. When relay **25C1** operates later, contacts **25C1–1** further insure that transistors **26M** and **26R** remain off. After the connection has been established and the operated one of relays **25A** or **25B** and relay **25C1** have released, transistor **26M** on after one millisecond and advances counter **2400**. No further scanning pulses are transmitted from the central office unit to the field unit for 125 milliseconds and thus after the first 25 of these milliseconds, transistor **26R** turns on and causes counter **2400** to reset. Scanning of lines then proceeds from the first line in the other of the two groups.

The diodes across the coils of relays **25A** and **25B** as well as those in parallel with the coils of other relays are to insure that excessive reverse voltages are not obtained when the relays release. The diodes short circuit the coils when the relays release in the well-known manner.

The **25A** or **25B** relay in operating closes respective contacts **25A–3** or **25B–3** on FIG. 21. Normally, each of the six transistors **2100–G1** through **2100–LS4** is held non-conducting by the application of a positive potential from source **2101** to the respective base terminals. However, when either contacts **25A–3** or **25B–3** close, source **2102** is connected to these bases and partially overcomes the inhibiting effect of source **2101**. These transistors, however, do not operate unless a negative potential is also applied to respective conductors **24G1** through **24LS4**. These conductors are connected via cable **2420** to respective stages of counter **2400**. Each of these conductors has a negative potential applied to it from the respective counter stage only if the stage is in the 1 state and the 0 output is negative in potential. Those of transistors **2100–G1** through **2100–LS4** that are operated thus represent those stages of the counter **2400** in the 1 state.

The operation of each of these transistor controls the operation of its respective relay **21G1–21LS4**. Current from the collector of each of these transistors flows through the coil of its respective relay to source **2109** and the relay is operated. The particular ones of relays **21G1–21LS4** which are operated indicate a particular line as does the count maintained in counter **2400**. For example, if all stages of the counter are in their 1 states, all of the relays are operated. Relays **21G1** and **21G2**, both operated, indicated that the line is in group 3. Relays **21LS1** through **21LS3** operated indicate that the line is in the eighth horizontal, and relay **21LS4** operated is an indication that the particular line can be connected to a link by the operation of steering level 9 rather than steering level 8. Two lines are thus identified, line **63** in line switch A and line **127** in line switch B. This is similar to the identification of two lines by the count of counter **2400**. The final step in the identification of the particular line will be seen later to result from which of relays **25A** or **25B** has been operated.

The auxiliary relay **25AUX**, having been operated from the initial operation of either relay **25A** or **25B**, transfers the tip and ring conductors **9T1** and **9R1** of control pair 1 from the primary of transformer **2601** to the windings of the first four identification relays **22ID–1** through **22ID–4**. Contacts **25AUX–1** and **25AUX–2** open, thus disconnecting conductors **22TIC** and **22RIC** from respective conductors **24ID–1** and **24ID–3**. Contacts **25AUX–5** and **25AUX–6** are now closed, and it is seen that the tip and ring conductors of control pair 1 are each connected through various diodes to the coils of two respective ones of the first four identification relays.

Each trunk is identified by a 2-out-of 8 code. A trunk is identified by the operation of:

(1) One of relays **22ID–1** or **22ID–2**, and one of relays **22ID–3** or **22ID–4**; or

(2) One of relays **22ID–1** through **22ID–4** and one of relays **22ID–5** through **22ID–8**.

Thus, when auxiliary relay **25AUX** connects the tip and ring conductors of control pair 1 to the first four identification relays, one or two of these relays operate. A positive potential applied by the central office unit to the tip of control pair 1 causes relay **22ID–2** to operate. A negative potential on this conductor causes identification relay **22ID–1** to operate instead. Similarly, positive and negative potentials on the ring of control pair 2 cause respective relays **22ID–4** and **22ID–3** to operate.

The following table indicates the potentials on conductors **9T1**, **9R1**, **9T2**, and **9R2**, and the corresponding operated identification relays required to identify the twenty trunks.

Trunk	Polarity of—				Identification relays operated:							
	9T1	9R1	9T2	9R2	1	2	3	4	5	6	7	8
9A0	−	−			√		√					
9A1	−	+			√			√				
9A2	−		−		√				√			
9A3	−		+		√					√		
9A4	−			−	√						√	
9A5	−			+	√							√
9B0	+	−				√	√					
9B1	+	+				√		√				
9B2	+		−			√			√			
9B3	+		+			√				√		
9B4	+			−		√					√	
9B5	+			+		√						√
9AB12		−	−				√		√			
9AB13		−	+				√			√		
9AB14		−		−			√				√	
9AB15		−		+			√					√
9AB16		+	−					√	√			
9AB17		+	+					√		√		
9AB18		+		−				√			√	
9AB19		+		+				√				√

The central office unit, after transmitting or receiving the simplex pulse and after having applied a greater negative potential to conductor **9T2** or **9R2**, energizes conductors **9T1–9R2** in accordance with the trunk it has determined should be used. The operation of one or two of the first four identification relays in the field unit is an indication that the signal information on control pair 1 has operated the appropriate identification relay or relays. One or two of contacts **22ID–1–3** through **22ID–4–3** close and negative source **2201** is connected to conductor **22C1**. This potential is extended along cable **2202** to the coil of relay **25C1** which thus operates. Relay **25C1** in operating transfers the tip and ring conductors of the second control pair to respective windings of the last four identification relays. Contacts **25C1–1** and **25C1–2** open, and conductors **9T2** and **9R2** are no longer connected to respective relays **25A** and **25B**. Instead, when contacts **25C1–3** and **25C1–4** close it is seen that these conductors are connected to respective conductors **22ID–5** and **22ID–7**. Conductor **22ID–5** is connected in turn to the coils of identification relays **22ID–5** and **22ID–6**, and conductor **22ID–7** is connected to the coils of relays **22ID–7** and **22ID–8**.

The greater negative potential originally applied by the central office unit to either conductor **9T2** or **9R2** operates one of respective relays **25A** or **25B**. The central office must verify that relay **25A** or **25B** has operated. The negative current in that one of conductors **9T2** and **9R2** having applied to it the lesser potential normally inhibits relay **54TR** in the central office unit from operating. When either relay **25A** or **25B** operates, relay **25AUX** operates and opens contacts **25AUX–3** and **25AUX–4**. If relay **25A** was originally operated, it remains operated because contacts **25A–4** close. However, when contacts **25AUX–4** open, current ceases to flow in conductor **9R2**. Relay **54TR** in the central office unit operates to indicate that relay **25A** has operated. The central office then applies identifying potentials to the control conductors. Similarly, if the original greater potential was on conductor **9R2**, current continues to flow in this conductor when relay **25AUX** operates, as contacts **25B–4** are closed. However, contacts **25AUX–3**, now open, are not shunted by closed contacts **25A–4** as relay **25A** has not operated. Current ceases to flow in conductor **9T1**, and the central office now places the identification potentials on the control conductors.

The originally operated one of relays **25A** or **25B** is no longer held by the greater negative potential on conductor **9T2** or **9R2** as the central office has removed this potential. However, capacitor **2507** is normally charged from source **2590** and now discharges through contacts **25C1–5**, diode **2508**, and either of contacts **25A–5** or **25B–5** to maintain the operated relay operated. The discharge maintains the one relay operated until it is maintained by the energization of conductor **22C1′** connected to diode **2508**. This conductor is connected to negative source **2201** after one or two of the first four identification relays has operated, and one or two sets of contacts **22ID–1–1** through **22ID–4–1** have closed, as described above. Relay **25A** or **25B** thus remains operated for the duration of the switching sequence until the operated one or ones of the first four identification relays release.

Positive or negative potentials may be applied to either the tip or ring of the second control pair by the central office unit and one of relays **22ID–5** through **22ID–8** may operate. Relay **25C1** controls the connection of the second control pair to the last four identification relays only after one or two of the first four identification relays have operated. This allows sufficent time for the original negative potentials on conductors **9T2** and **9R2** to subside and for the new identifying potential applied to take effect. When both identification relays have operated conductor **22C2** is connected to negative source **2201**. If the trunk selected is identified by two relays in the first four it is seen that conductor **22C2** was already connected to source **2201** through one of contacts **22ID–1–4** or **22ID–2–4**, and one of contacts **22ID–3–4** or **22ID–4–4** after the identification potentials on the first control pair were transmitted. Con-

ductor 22C2 is connected through cable 2203 to the coil of relay 25C2 which operates. If the trunk selected is identified by one identification relay in the first four and another in the second four, relay 25C2 does not operate until after the second identification relay has energized. At this time, source 2201 is connected to conductor 22C2 through one set of contacts 22ID–1–3 through 22ID–4–3, and one set of contacts 22ID–5–3 through 22ID–8–3.

Two of identification relays 22ID–5 through 22ID–8 should not be operated together if no malfunctions have occurred. Conductor 22BLK is negative in potential only if both conductors 9T2 and 9R2 had identifying potentials applied to them and one set of contacts 22ID–5–4 or 22ID–6–4, and one set of contacts 22ID–7–4 or 22ID–8–4 have operated. In such a case the negative potential on conductor 22BLK is applied to the other end of the coil of relay 25C2 which thus does not opertate. It is the operation of this relay that directly initiates the operation of the crossbar switches, and this operation is prevented if erroneous identifying signals have been transmitted. Similarly, if both of relays 25A and 25B have operated relay 25C2 should be prevented from operating as one of relays 25A or 25B has erroneously energized. In such a case, contacts 25A–12 and 25B–12 are both closed and connect negative source 2503 to the coil of relay 25C2 which is thus prevented from operating. If relay 25L has erroneously operated with relay 25A negative source 2527 is connected through contacts 25L–3 and 25A–13 to the coil of relay 25C2 to prevent it from operating. If relay 25R or 25R1 has erroneously operated with relay 25B, contacts 25B–12 and 25R–4 or 25R1–4 connect negative source 2503 to the coil of relay 25C2 which is again prevented from operating. (Relay 25L cannot operate together with relay 25B, for as explained below, these relays operate in response to opposite polarity potentials appearing on conductor 9R2. Similar remarks apply to relays 25R and 25A, and conductor 9T2.)

During the switching sequence to follow it is desirable to prevent the erroneous turning off of transistor 26AF1 which would cause transistor 26AF to generate further simplex pulses. This erroneous operation could arise from extenral sources or the various pulses and potentials appearing throughout the field unit. Relay 25C2, in operating, closes contacts 25C2–7, which connect negative source 2669 through resistors 2667 and 2671 to the base of transistor 26AF1 which is thus held on.

When relay 25C2 operates, the two appropriate identification relays have been energized, and as this is the only information that need be transmitted from the central office unit to the field unit the crossbar switches can now be operated. Contacts 25C2–1 on FIG. 21 close and positive source 2105 is connected through these contacts, normally closed contacts 25CK1–1 and either contacts 25A–6 or 25B–6 to conductor 21SMG, and through either contacts 25A–7 or 25B–7 to conductor 21SMG′. This positive potential on conductor 21SMG′ is extended through cable 2106 to FIG. 19 and through various contacts of the identification relays to either conductor 19TSM–9 or 19TSM–8. Referring to trunk switch A it is seen that one of any pair of two trunks may be connected to a link depending upon which of the trunk switch steering level select magnets operates. For example, trunk 9ATK0–8 can be connected to any one of the 20 links if trunk switch select magnet 21TSMA8 operates while trunk 9ATK0–9 can be connected to these links only if trunk switch select magnet 21TSMA9 is operated. The contact chain connected to conductor 21SMG′ results in the positive potential on this conductor being connected to either one of conductors 19TSM–9 or 19TSM–8 in accordance with which two of the eight identification relays have operated.

In a similar manner, the positive potential on conductor 21SMG is transmitted through various ones of the contacts controlled by the identification relays to one of conductors 19TSM–0 through 19TSM–6. The particular one of these conductors which is energized is dependent upon the trunk identified. It should be noted that there is no conductor 19TSM–7 as select magnets 7 in both trunk switches are to be operated only to establish a local connection.

The positive potential on one of conductors 19TSM–9 or 19TSM–8, and the positive potential on one of conductors 19TSM–0 through 19TSM–6 are transmitted via cable 1901 to FIG. 21 which contains the trunk switch select magnets of both the A and B trunk switches. The potential on one of conductors 19TSM–8 or 19TSM–9 directly operates both of select magnets 21TSMA8 and 21TSMB8, or 21TSMA9 and 21TSMB9. The potential on one of conductors 19TSM–0 through 19TSM–6 directly operates the respective select magnets in both trunk switches. Although two select magnets are thus operated in both trunk switches A and B, a hold magnet will be operated in only one of them and thus connections are established through only one of the two crossbar switches.

In addition to the two trunk switch select magnets that must be operated, two line switch select magnets must be operated as well. The positive potential on conductor 21SMG in addition to being extended to the associated contact chain on FIG. 19 is extended to FIG. 18 as well. Relays 21LS1 through 21LS3 represent the horizontal in which the line desiring service is contained. The positive potential on conductor 21SMG is extended through the tree translator of FIG. 18 to operate one of select magnets 18LSMA0–18LSMA7 and one of select magnets 18LSMB0–18LSMB7. Again although line switch select magnets are operated in both line switches A and B, a hold magnet in only one of these switches will be operated, and connections will be established through only one of the line switches.

Relay 21LS4 identifies the line switch steering select magnet which connects any line to one of its respective links. The potential on conductor 21SMG is extended through either contacts 21LS4–1 or 21LS4–2 to operate steering level select magnets 18LSMA8 and 18LSMB8, or steering level select magnets 18LSMA9 and 18LSMB9.

After the appropriate four line select magnets (only two, in a particular one of the two line switches, will be utilized) have operated, and after the appropriate four trunk switch select magnets (only two, in a particular one of the two trunk switches, will be utilized) have operated, the first available link must be selected and its line and trunk switch hold magnets operated to establish connections through the line and trunk switches. Each of the trunk switch select magnets on FIG. 21 has adjacent to it a set of contacts controlled by it. It is seen that after either one of the trunk switch steering level select magnets on either switch has operated, and after any one of the eight horizontal select magnets on the same switch has operated, the potential of negative source 2107 appears on conductor 2108. This potential is extended directly to conductor 18HM. Relays 17HMA and 17HMB do not operate however due to the various open contacts in the paths of their relay coils. The negative potential on conductor 2108 is extended through contacts associated with the line switch select magnets of FIG. 18 in a similar manner to conductor 1800. Thus, conductor 1800 has applied to it a negative potential only when horizontal and steering level select magnets have operated in both the line and trunk switches. This negative potential on conductor 1800 is an indication that the appropriate hold magnet pair may now be selected and operated.

The operation of the same numbered hold magnet in each of line and trunk switches A or B is dependent upon the fact that these switches are of the magnetic latching type. A hold magnet in any one of the four crossbar switches at the field unit operates when cur-

rent is passed through its respective winding in one direction. The hold magnet remains operated even after this current ceases. It releases only when current is passed through its winding in the opposite direction. The appropriate hold magnet of either the A or B line switch is operated first. Following this, the same numbered hold magnet in the respective trunk switch is operated. The two hold magnets are not operated simultaneously. This is due to the fact that in a local connection, to be described below, the line switch hold magnet does not operate while the trunk switch hold magnet releases and then reoperates. The establishment of a local connection necessitates that the same numbered hold magnets in respective line and trunk switches not be operated simultaneously and for this reason even in the establishment of a regular connection, where this requirement does not exist, they are operated at different times in order that the same equipment be capable of handling both regular and local connections.

It will be recalled that during the scanning sequence, source **1700** applied a positive potential to each of conductors **17LHA0–17LHB3**, which potentials were extended through respective trunk hold magnet contact chains to respective conductors **27GBA0–27GBB3** to inhibit the scanning circuit in the event that all links serving the particular line being scanned were in use. The positive potential of source **1700** is applied to conductors **17LHA0–17LHB3** through respective resistors **1705**. The negative potential on conductor **1800** is applied through break contacts **17LHK–B1** and the tree translating network of FIG. 17 directly to one of these eight conductors. This negative potential over-rides the positive potential from source **1700** applied through a resistor, and one of conductors **17LHA0–17LHB3** has applied to it the negative potential of source **2107**.

The particular one of conductors **17LHA0–17LHB3** which is energized at this time depends upon which of the two line switches serves the line desiring service, and furthermore, which of the four groups of links in this switch serves the same line. Either contacts **25A–8** or **25B–8** are closed depending upon which relay **25A** or **25B** has operated. Relays **21G1** and **21G2** determine the group serving the line being scanned and connect the respective one of conductors **17LHA0–17LHB3** through the respective contacts **25A–8** or **25B–8** to conductor **1800**. For example, if the first line in line switch A is being served, as has been stated above, all six stages of counter **2400** are in their 0 states. Relays **21G1** and **21G2** are both unoperated. As relay **25A** is operated for a line in line switch A, it is seen that the negative potential on conductor **1800** is applied through the break contacts of relay **17LHK**, conductor **1702**, and contacts **25A–8, 21G2–4, 21G1–8** to conductor **17LHA0**.

This conductor is extended to the hold magnet circuit of trunk switch A shown in FIG. 13. As this conductor represents the first group in the A switches, the contact chain in its path is controlled by trunk switch hold magnets **13THA0–13THA4**. If hold magnet **13THA0** is not operated, the negative potential is extended through normally closed contacts **13THA0–1** to conductor **1300–0**. If this hold magnet is already in use, the negative potential is extended through normally open contacts **13THA0–1** which are closed; and contacts **13THA1–1** to conductor **1300–1** if hold magnet **13THA1** is not in use. The potential is extended to the respective one of conductors **1300–0** through **1300–4** which is associated with the first idle link. At least one of these hold magnets must be idle or as explained above a service request would never have been generated in the first place as the original positive potential of source **1700** would have been extended through conductor **27GBA0** to inhibit the line scanning circuit.

There are 40 conductors analogous to conductors **1300–0** through **1300–4**, each connected to a particular one of the 20 hold magnets in one of the trunk switches. Although the remainder of this detailed description will describe the connection of a line served by the A switches and served by the first group of links, similar remarks apply to any other combinations.

One of conductors **1300–0** through **1300–4** now has a negative potential applied to it. This potential has no effect on the respective one of trunk switch hold magnets **13THA0–13THA4**. Although the conductor is connected to one end of the winding of a respective trunk switch hold magnet, the other end is connected to one of conductors **12SAG0–1** through **12SAG0–5**. This conductor is the sleeve of the respective link which has no connection through the A trunk switch at this time. The other end of the winding of the respective hold magnet is also connected to a respective one of conductors **1301–0** through **1301–4**. However, each of these conductors has in series with it respective open contacts **14LHA0–1** through **14LHA4–1**, operated by the respective line switch hold magnet. Thus the trunk switch hold magnet selected does not operate.

However, the negative potential on one of conductors **1300–0** through **1300–4** is extended through a respective one of conductors **1302–0** through **1302–4** to one end of the winding of a respective line switch hold magnet. The other end of the winding of each line switch hold magnet is connected to conductor **14HG** which at this time is connected to conductor **1410**, through normally closed contacts **28LR–3** and **25R1–1**, and either of now closed contacts **25A–10** or **25B–10** to positive source **2800**. Current thus flows through the coil of the first available line switch hold magnet of the particular group serving the line desiring service and the magnet operates.

When the selected line switch hold magnet operates, respective contacts **14LAH0–2** through **14LHA4–2** close, and the negative potential on the energized one of conductors **1302–0** through **1302–4** is applied to the respective one of conductors **14HCA0–14HCA4**. The forty **14HCA0–16HCB19** conductors are connected through forty individual sets of contacts **17HCA–0** through **17HCB–19** to conductor **1710**. Relays **17HCA** and **17HCB** operated when either of contacts **25A–9** or **25B–9** initially closed, current flowing from source **1711**, through the coils of both relays, and through either contacts **25A–9** or **25B–9** to source **1712**. The negative potential on conductor **1710** is now extended through contacts **28C3–2**, and contacts **17LHK–B2** to one end of the coil of relay **17LHK**, the other end being connected to positive source **1713**. Relay **17LHK** operates. This relay, in operating, controls the make-before-break contacts adjacent to it. When the break contacts **17LHK–B1** open, the negative potential on conductor **1800** is no longer applied to the selected one of conductors **17LHA0–17LHB3** and current ceases to flow through the selected line switch hold magnet. However, the line switch hold magnet being of the magnetic latching type remains operated once pulsed. Thus the connection through the line switch of the line desiring service to the first idle link in the group serving the line is established and maintained. The negative potential on conductor **1800** is now extended through make contacts **17LHK–M1**, and through the coil of relay **17LHK** to source **1713**, and relay **17LHK** remains operated.

Relay **17LHK**, in operating, causes relays **17HMA** and **17HMB** to operate. Contacts **17LHK–2** close and positive potential source **1714** is extended through these contacts, resistor **1715**, and through the coils of both relays **17HMA** and **17HMB** to conductor **18HM**. This conductor is connected directly to conductor **2108** to which is applied the negative potential of source **2107**. Thus both of relays **17HMA** and **17HMB** now operate. However, it is desired to operate these relays only after the negative potential on the respective one of conductors **14HCA0–14HCA19** or **16HCB0–16HCB19** has been

removed in response to the opening of the break contacts **17LHK–B1**. Until these contacts open the negative potential on one of these 40 HC conductors is extended directly through diode **1716** to the coils of relays **17HMA** and **17HMB** and these relays do not operate. It is only after the selected line hold magnet operates, and causes relay **17LHK** to operate and remove the negative potential on the selected one of the HC conductors that positive source **1714** energizes relays **17HMA** and **17HMB**. The relays lock over contacts **17HMA–22** independent of the negative potential on conductor **18HM**.

When these relays operate, positive source **1714** is directly connected through contacts **17LHK–3**, **17HMB–22**, and respective contacts **17HCA–0** through **17HCA–19** and **17HCB–0** through **17HCB–19** to all of conductors **14HCA0–14HCA19** and **16HCB0–16HCB19**. Thus a positive potential is now applied to all of conductors **1300–0** through **1300–19**, and the analogous 20 conductors associated with the B switches which are associated with operated ones of the line switch hold magnets. Thus instead of a negative potential being applied via one of conductors **1300–** to the particular trunk switch hold magnet to be operated, a positive potential is applied to all of the trunk switch hold magnets associated with operated line switch hold magnets, including the trunk switch hold magnet to be operated to establish a connection to the line requesting service. The other end of each winding of these trunk switch hold magnets are connected through respective closed contacts **14LHA0–1** through **14LHA19–1** to respective conductors **14HMA0–14HMA19** in the A trunk switch and through analogous contacts to conductors **16HMB0–16HMB19** in the B trunk switch. The 40 conductors **14HMA0–14HMA19** and **16HMB0–16HMB19** are connected through respective contacts **17HMA–0** through **17HMA–19** and **17HMB–0** through **17HMB–19**, and now closed contacts **17LHK–4** to negative source **1720**. Thus current flows through the windings of all of the previously operated trunk switch hold magnets which are associated with respective operated line switch hold magnets as well as the one trunk switch hold magnet associated with its newly operated line switch hold magnet. Pulsing the windings of operated trunk switch hold magnets has no effect as these magnets remain operated. When the newly selected trunk switch hold magnet is pulsed, however, it operates and establishes the connection through the trunk switch. This completes the regular connection at the field unit.

The sleeve associated with the line just given service is now connected through its line switch to one of negative sources **702**. The negative potential on the sleeve prevents the line from generating a service request even though the subscriber is off-hook. The associated one of diodes **807** is reverse biased as it is when the subscriber is on-hook.

It is necessary to notify the central office unit that the connection has been established. Furthermore, the central office unit should be notified that the connection has been established only if the trunk whose identification was originally transmitted by the central office unit is indeed the trunk connected to the line requesting service.

Conductors **12SAG0–1** through **12SAG3–5** in trunk switch A have applied to them the negative potential of source **1720** via conductors **1301–0** through **1301–19**. These conductors are extended through trunk switch A to the sleeves of the respective trunks connected to links operated by the hold magnets to which these conductors are connected. Thus those of the 20 sleeve leads **9SA0–9SA5**, **9SB0–9SB5**, and **9SAB12–9SAB19**, associated with trunks connected through the trunk switches to various links, have applied to them a negative potential. These leads are all extended via cable **950** to respective ones of conductors **19TSA–0** through **19TSB–19**. To verify that the identified trunk has indeed been connected through the trunk switch, the contact chains on the bottom half of FIG. 19 are provided. Although many of conductors **19TSA–0** through **19TSB–19** have applied to them a negative potential, only that one of these 20 conductors associated with the identified trunk will be connected to conductor **19TS** through the contact chains, the contacts in these chains being controlled by the eight identification relays **22ID–1** through **22ID–8**. Thus only if the correct trunk is now connected through the trunk switch is conductor **19TS** energized with a negative potential. The contact chain translation is necessary at this stage to verify that the identified trunk has been connected through a trunk switch as all of the sleeves associated with trunks in use have applied to them a negative potential. The contact chains on the lower portion of FIG. 19 permit only a negative potential on the sleeve associated with the identified trunk to be transmitted to conductor **19TS** if this potential has been applied as desired to the sleeve of the identified trunk.

The negative potential on conductor **19TS** is extended through closed contacts **25C2–2**, normally closed contacts **28C3–3**, conductor **23CKA**, the top coil of relay **25CK**, and either contacts **25A–11** or **25B–11** to positive source **2516**. Relay **25CK** thus operates. Contacts **25CK–1** on FIG. 17 now close. Current flows from positive source **2511**, through the coil of relay **25CK1**, conductor **25CK1′**, closed contacts **28C3–1** and **25CK–1**, conductor **1721**, and through one or two of contacts **22ID–1–5**, through **22ID–4–5** to negative source **2201**. Relay **25CK1** thus operates. Contacts **25CK1–1** on FIG. 21 thus open, and the original positive potential of source **2105** which operated all of the line and trunk switch select magnets is removed from conductors **21SMG** and **21SMG′**. All of the line and trunk switch select magnets operated (eight in all) release. When the select magnets release the negative potential of source **2107** is removed from conductors **1800** and **18HM**. As a result, relays **17LHK**, **17HMA**, and **17HMB** release.

Relay **25CK1** operated, causes contacts **25CK1–2** on FIG. 22 to close. These contacts control the transmission of the check signal to the central office unit. A negative signal is transmitted over either the tip or ring of the second control pair. If the original identification of the trunk required the use of either the tip or ring of the second control pair, the potential originally applied still being present on the conductor, the other of these two conductors is used for transmitting the check signal. In the event that the identification of the trunk required the use of both conductors in the first control pair and neither of the conductors in control pair 2, the check signal is transmitted over the tip of the second control pair. For example, if the identification relays operated were one of relays **22ID–1** or **22ID–2**, and one of **22ID–3** or **22ID–4**, it is seen that the negative potential of source **2211** is extended through one of contacts **22ID–3–2** or **22ID–4–2**, and one of contacts **22ID–2–2** or **22ID–1–2** to conductor **2230** which is connected through closed contacts **25C2–3** to conductor **25ID–5** which, as explained above, is at this time connected to conductor **9T2**. Similarly, if one identification relay in each group of four is operated, the negative check signal is extended through either of contacts **25C2–3** or **25C2–5** to the unused conductor of control pair 2.

When relay **25C2** operated, contacts **25C2–4** and **25C2–6** opened. Thus the check signal has no effect on the identification relays. It should be noted that when contacts **25C2–4** and **25C2–6** opened, the operated one, if any, of the last four identification relays was held by its respective contacts **22ID–5–1** through **22ID–8–1**. These contacts connect their respective relay coils to conductors **22ID–5** or **22ID–7** on one of which is an identifying potential.

When the central office receives the check signal it removes the two identification signals from the two of the four control conductors used. The two operated identi-

fication relays 22ID–1 through 22ID–8 release, their contacts open, and the negative potential originally applied to conductor 22C1′ which held one of relays 25A or 25B operated is removed. The operated one of relays 25A or 25B thus releases, and all of the relays held operated by contacts on the operated one of these two relays are released. The field unit resets.

When either of relays 25A or 25B originally operated, contacts 25A–2 or 25B–2 on FIG. 26 closed. These contacts remain closed until their controlling relays release. It will be recalled that either set of these contacts connected positive source 2677 to the junction of diode 2610 and capacitor 2611 which maintained both of transistors 26M and 26R off. When these contacts open transistor 26M goes on after one millisecond. The central office does not resume transmitting scan pulses over the first control pair for 125 milliseconds after the receipt of the check signal from the field unit. After 2.5 milliseconds, transistor 26R turns on and resets counter 2400. The field unit it thus in a condition to resume line scanning with the first line in whichever group the central office now scans. The polarity of the scan pulses transmitted to the field unit determines which group of 64 lines is next scanned.

(2) SUMMARY OF SIGNAL INFORMATION TRANSMITTED BETWEEN CENTRAL OFFICE AND FIELD UNITS FOR REGULAR CONNECTION

Scanning pulses of either polarity are transmitted along conductors 9T1 and 9R1. The pulses are transmitted at a rate of 500 pulses per second. Groups of 64 pulses of the same polarity are transmitted followed by no signals for 5 milliseconds. A service request by either end unit results in the application of a positive simplex pulse to the tip and ring of control pair 1.

During scanning, no potentials are applied to conductors 9T2 and 9R2. Following the application of the simplex pulse to control pair 1 by either end unit, the central office applies a greater negative potential to either conductor 9T2 or 9R2, depending on which switch contains the line desiring service, and a lesser negative potential to the other conductor. The field unit opens one of conductors 9T2 or 9R2 when relay 25A or 25B energizes, and the central office unit then applies the identification signals to the control conductors. Following the the establishment of the connection, the field unit applies a negative signal to the unused one of conductors 9T2 or 9R2, or to conductor 9T2 in the event that both conductors 9T2 and 9R2 are unused, to notify the central office that the field unit has completed its operation. The central office unit then removes the two identification signals from the control conductors, and after waiting for a period of 125 milliseconds resumes transmitting scan pulses over conductors 9T1 and 9R1.

E. *Trunk release*

(1) DETAILED DESCRIPTION OF FIELD UNIT OPERATION

Trunk scanning for release of a regular connection proceeds at the central office location. The common control scans all trunks in all eight concentrators to detect a now idle but previously used trunk condition. The scanning sequence will be described below when the common control and central office units are considered. This section relates only to the manner in which a field unit releases the crosspoints previously connecting a line to the now unused trunk.

When the common control detects this condition it must notify the particular field unit that the trunk is to be released. Unlike line scanning, it is not necessary to hold counter 2400 as the identity of the line connected to the trunk is not needed for releasing the trunk. As explained above, the field unit only requires the identity of the trunk itself. The sleeve connection through the trunk crossbar switch to the hold magnet automatically identifies the particular link connected to the trunk. During the release of the trunk, line scanning is inhibited by the common control and scan pulses are not transmitted along control pair 1.

The common control causes the particular central office unit to apply a large positive potential over the tip of control pair 2. To establish a connection it will be recalled that a large negative potential is applied to either conductor 9T2 or 9R2 depending upon which switch A or B contains the line requesting service. To release a trunk a larger positive potential is always applied to conductor 9T2, and a lesser positive potential to conductor 9R2. The large positive potential is transmitted through normally closed contacts 25C1–1, diode 2510, and contacts 25AUX–7 to the coil of relay 25R. Relay 25R operates and contacts 25R–1 close. Current flows from source 2511 through contacts 25R–1, the coil of relay 25R1, conductor 25LR1, resistor 2801, and contacts 28LR–4 to source 2802. Relay 25R1 thus operates. The operation of this relay in turn causes relay 25AUX to operate. Contacts 25R1–2 close, and current flows from source 2533, through the coil of relay 25AUX, and contacts 25R1–2 to source 2534.

The operation of relay 25AUX causes contacts 25AUX–8 to open. The smaller current flowing through conductor 9R2 thus ceases and the central office equipment is notified that the field unit has recognized the central office command. Relay 25AUX also connects conductors 9T1 and 9R1 to the first four identification relays 22ID–1 through 22ID–4. The central office applies the two identifying potentials to two of conductors 9T1, 9R1, 9T2 and 9R2. As in a regular connection sequence, one or two of the first four identification relays in the field unit operate. The positive potential originally applied to conductors 9T2 and 9R2 are no longer applied by the central office unit, identification signals having taken their places. Although relay 25R releases, relay 25R1 remains operated. Contacts 25R1–3 are now closed and capacitor 2507 discharges through the path including contacts 25C1–5 and 25R1–3, the coil of relay 25R1, conductor 25LR1, resistor 2801, and contacts 28LR–4. This capacitor discharge maintains relay 25R1 operated in the same manner that it maintain either of relays 25A or 25B operated after their initial operation.

Contacts 25R–2 shunt contacts 25AUX–7 and thus enable relay 25R to remain operated from the positive potential on conductor 9T2 even after contacts 25AUX–7 open. Thus relay 25R remains operated until the central office removes the original positive potential from conductor 9T2. Relay 25R then releases and only relays 25R1 and 25AUX remain operated, due to the discharge of capacitor 2507.

When one or two of the first four identification relays have operated, relay 25C1 operates as in the regular connection sequence. The operation of this relay, again, connects conductors 9T2 and 9R2 to identification relays 22ID–5 through 22ID–8, and one of the last four identification relays operates if the trunk code includes one of these relays.

As in a regular connection, relay 25C2 operates after two of the identification relays have operated. Again, this relay is prevented from operating by the negative potential on conductor 22BLK in the event that two of the last four identification relays have operated and two of contacts 22ID–5–4 through 22ID–8–4 have closed. Similarly, if relay 25B has operated, relay 25C2 is prevented from operating, negative source 2503 being applied through contacts 25B–12, and 25R1–4 or 25R–4 to the coil of relay 25C2, the relay thus remaining unoperated. (Relay 25A cannot operate if relay 25R has operated as both relays operate from different polarity potentials being applied to conductor 9T2.)

When relay **25C1** operates, contacts **25C1–5** open and relay **25R1** is no longer held operated by the discharge of capacitor **2507**. However, conductor **22C1′** is connected to negative source **2201** before relay **25C1** operates as in the regular connection sequence, and as this conductor is connected to the coil of relay **25R1** through contacts **25R1–3**, relay **25R1** remains operated.

With relays **25R1** and **25C2** operated, contacts **25R1–5**, **25R1–6**, and **25C2–5** on FIG. 25 are closed. Current flows through both coils of relay **25CK** and this relay does not now immediately operate, current flowing through the lower coil as well as the oppositely wound upper coil. The positive potential of source **2504** is now extended through contacts **25R1–6**, the uppermost coil of relay **25CK**, conductor **23CKA**, contacts **28C3–3** and **25C2–2** to conductor **19TS**. The positive potential is extended through the lower translating network of FIG. 19 to one of the 20 conductors **9SA0–9SAB19**. This potential, extended along cable **950**, is transmitted through one of the two trunk switches to one of conductors **12SAG0–1** through **12SAG3–5** or **15SBG0–1** through **15SBG3–5**. A positive potential is thus applied to one end of the winding of the hold magnet controlling the trunk crossbar connection to be released. When relay **25R1** operated, contacts **25R1–8** closed and the potential of negative source **2865** is now extended through contacts **25R1–8** and **28LR–3** and conductor **1410** to one end of the winding of each of the 40 line switch hold magnets. Current thus flows from this source through conductor **1410**, the winding of the particular line switch hold magnet connected by its respective conductor **1302–0** through **1302–19** or **1502–0** through **1502–19** to the coil of the particular trunk switch hold magnet the other end of whose winding has applied to it the negative potential originating on conductor **19TS**, and the winding of the trunk switch hold magnet. The current in both particular line and trunk switch hold magnets thus energized is in a direction opposite to the current directions in these windings when the hold magnets were originally operated. Both hold magnets release.

When the trunk switch crosspoints open, current no longer flows through conductor **23CKA** as the trunk switch sleeve crosspoint is now open. Current now flows only through the lowermost winding of relay **25CK** and this relay operates. As in the regular connection sequence contacts **25CK–1** close. Current now flows from source **2511** through the coil of relay **25CK1**, conductor **25CK1′**, contacts **28C3–1** and **25CK–1**, conductor **1721**, and one or two of contacts **22ID–1–5** through **22ID–4–5** to source **2201**. Relay **25CK1** operates and contacts **25CK1–2** on FIG. 22 close. As in the regular connection sequence, a negative potential is now extended through the identification relay contacts to the unused wire of control pair 2, or the tip of this control pair if both wires are unused, to the central office unit which is thus notified that the trunk has been released.

Relay **25R1** which controls the operation of the circuit for a trunk release is held operated by the negative potential on conductor **22C1′**. When the central office removes the identifying potentials from the two of the control wires used, the two operated ones of the eight identification relays in the field unit release and conductor **22C1′** is no longer connected to source **2201**. Relay **25R1** thus releases and the field unit is restored to its original condition. The central office sends no scan pulses for 125 milliseconds. Contacts **25C1–1** on FIG. 26, when closed, prevent transistors **26M** and **26R** from turning on as do contacts **25A–2** and **25B–2** in a regular connection. When relay **25C1** releases transistor **26R** times out and counter **2400** is reset. Line scanning thus resumes with the first line in either group, the particular group being determined by the polarity of the scan pulses transmitted along conductors **9T1** and **9R1** from the central office.

(2) SUMMARY OF SIGNAL INFORMATION TRANSMITTED BETWEEN CENTRAL OFFICE AND FIELD UNITS FOR TRUNK RELEASE

The sequence is initiated by the application of a greater positive potential to conductor **9T2**, and a lesser positive potential to conductor **9R2** by the central office unit. The field unit, with the operation of relay **25AUX**, then causes the lesser current flowing in conductor **9R2** to cease. The central office then responds with the potentials identifying the trunk to be released on two of the four control wires. After the connection has been broken through the crossbar switches at the field unit, the field unit causes a negative potential to be applied to the unused one of conductors **9T2** and **9R2**, or conductor **9T2** if both are unused, which notifies the central office that the field unit has completed its operation. The central office unit then removes the identifying potentials and the field unit restores. Scan pulses are transmitted 125 milliseconds thereafter.

F. *Local connection*

(1) DETAILED DESCRIPTION OF FIELD UNIT OPERATION

As described above, the common control initiates a local connection sequence. The determination by the common control of the possibility of establishing a local connection is achieved in a manner to be described below. When this determination is made however, further scanning is inhibited and the field unit is notified. As with a trunk release, the count in counter **2400** is unnecessary for the switching sequence. The only information that the field unit requires to establish the local connection is the identity of the two trunks connected to the two subscribers served by the field unit.

The field unit is notified of a service request by the application of a greater negative potential to either of conductors **9T2** or **9R2** and a lesser negative potential to the other. A greater positive potential on conductor **9T2** and a lesser one on conductor **9R2** notifies the field unit that a trunk release sequence is to ensue. The third possible signal, the application by the central office unit of a greater positive potential to conductor **9R2** and a lesser one to conductor **9T2**, is used to notify the field unit that a local connection is to be established.

The greater positive potential on conductor **9R2** causes relay **25L** to operate, the coil of this relay being connected to conductor **9R2** through contacts **25AUX–8** and **25C1–2**. Relay **25L** in operating causes relay **28LA** to operate. Contacts **25L–1** close and current flows from source **2802** through contacts **28LR–4**, resistor **2801**, the coil of relay **28LA**, contacts **28C3–5**, and contacts **25L–1** to source **2806**. Contacts **28LA–1** close and relay **25AUX** operates. Contacts **25AUX–7** in opening cause the lesser current normally flowing in conductor **9T2** to cease, and the central office is notified that the field unit has recognized the command. Although contacts **25AUX–8** open, relay **25L** is still held by the positive potential applied by the central office unit to conductor **9R2**, contacts **25L–2** now being closed. When the central office unit removes this potential from conductor **9R2** relay **25L** releases. However, relay **28LA** is held operated by the discharge of capacitor **2507**, current flowing from the capacitor through contacts **25C1–5**, conductor **25C1′**, now closed contacts **28LA–2**, the coil of relay **28LA**, resistor **2801**, and contacts **28LR–4** to source **2802**. This discharge maintains relay **28LA** operated until conductor **22C1′** is energized as in the regular connection and trunk release sequences. This conductor, connected directly to conductor **25C1′**, maintains relay **28LA** energized even after contacts **25C1–5** open.

Relay **25AUX** in operating connects conductors **9T1** and **9R1** to the first four identification relays, and once again one or two of these relays operate in response to the central office unit identifying potentials. When these

relays have operated, conductors 22C1 and 22C1′ are connected to negative source 2201. Current flowing through conductor 22C1′ maintains relay 28LA operated. Current flowing through conductor 22C1 causes relay 25C1 to operate. Relay 25C1 in operating connects conductors 9T2 and 9R2 to the last four identification relays, one of which may operate at this time if an identifying potential is applied to conductor 9T2 or 9R2 by the central office unit. As with the sequences described heretofore, conductor 22C2 is energized after two of the identification relays have operated, and if conductor 22BLK is not energized at this time relay 22C2 operates. Relay 22C2 does not operate if relay 25R has erroneously operated and relay 25L has not released as negative source 2527 is connected through contacts 25L–3 and contacts 25R–3 to the coil of relay 25C2. Similarly, if relay 25A has erroneously operated, this same source is connected to the coil of relay 25C2 through contacts 25L3 and 25A–13. (Relay 25B cannot operate simultaneously with relay 25L as these relays operate upon the application of opposite polarity potentials to conductor 9R2.)

The operation thus far is similar to those of the sequences described above with two of the eight identification relays now being operated and relay 25C2 being energized. However, to establish a local connection, the field unit must be notified of the identity of the two trunks involved, and for this reason two sets of identifying potentials must be transmitted to the field unit. The first set is stored in identification relays 23ID–1′ through 23ID–8′. Although initially stored in identification relays 22ID–1 through 22ID–8 this storage is only temporary. Two of contacts 22ID–1–6 through 22ID–4–6 and 22ID–5–5 through 22ID–8–5 are closed. Similarly, all of contacts 28LA–3 through 28LA–10 are closed, and source 2208 is connected directly to the coils of two of the identification relays 23ID–1′ through 23ID–8′. Thus, for example, if identification relays 22ID–3 and 22ID–7 operate so do relays 23ID–3′ and 23ID–7′. Two of the eight identification relays on FIG. 23 thus remain operated as long as the same two analogous identification relays on FIG. 22 remain operated. The two operated ones of identification relays 23ID–1′ through 23ID–8′ lock to source 2301 through contacts 28LR–5, and 28C3–6 and respective contacts 23ID–1′–1 through 23ID–8′–1 only after relay 28C3 has operated.

When two of the eight identification relays on FIG. 23 initially operate conductor 28C3′ is connected to conductor 28C3. Contacts 23ID–1′–2 through 23ID–8′–2 and contacts 23ID–1′–3 through 23ID–4′–3 control this connection, conductor 28C3 being connected to conductor 28C3′ through two sets of contacts in the first four identification relays or one set of contacts in each group of four identification relays. Conductors 28C3 and 28C3′ are connected by cable 2302 to FIG. 28 where conductors 28C3 is connected through the coil of relay 28C3 and resistor 2803 to positive source 2804, and conductor 28C3′ is connected through now closed contacts 28LA–11 to negative source 2897. Relay 28C3 thus operates and when contacts 28C3–6 close the two operated identification relays on FIG. 23 lock to source 2301.

Transistor 26AF1, as in a regular connection and a trunk release, is held on by the closing of contacts 25C2–7, to prevent false operation of the transistor. Although relay 25C2 soon releases, transistor 26AF1 is still held on by a negative potential on conductor 26HSR. Contacts on relays 23ID–1′ through 23ID–8′ connect negative source 2030 directly to conductor 26HSR as do contacts 17HMB–23 connect source 2040 to this conductor when relay 17HMB later operates.

Relay 25L should have released by the time relay 28C3 is to operate. If it has not, contacts 25L–8 are closed and connect negative source 2885 to one end of the coil of relay 28C3. This prevents the relay from operating when conductor 28C3 is energized as there is no voltage drop across the coil of relay 28C3. Similarly, relay 28LB should not be operated at this time and if it has erroneously operated contacts 28LB–14 are closed and prevent relay 28C3 from operating. When relay 28LB does operate later, contacts 28C3–18 are already open and thus source 2885 is not then connected to the coil of relay 28C3 and it remains operated.

Contacts 28C3–7 on FIG. 22 close and as contacts 28LA–12 are closed at this time it is seen that the potential of negative source 2204 is extended over the unused one of conductors 9T2 or 9R2, or conductor 9T2 if both are unused, to the central office unit to notify it that the first trunk identity has been stored in two of identification relays 23ID–1′ through 23ID–8′.

The central office unit then removes the two identifying potentials from the control conductors. Conductor 22C1′ is no longer connected to source 2201 when the two operated ones of identification relays 22ID–1 through 22ID–8 release. Relay 28LA is thus no longer held operated. Contacts 28LA–1 open and relay 25AUX releases as well. Also, as conductor 22C1 is no longer connected to source 2201, relay 25C1 releases. And as conductor 22C2 is similarly no longer connected to source 2201, relay 25C2 releases. Relay 28C3, however, does not release. Although contacts 28LA–11 are now open and current no longer flows from source 2805 through the coil of relay 28C3, a capacitor discharge maintains the relay operated. Capacitor 2809 has charged from source 2805 and current now flows during the discharge of this capacitor through contacts 25CK1–3 to conductor 28C3′ in the same manner that current previously flowed from source 2805 through contacts 28LA–11 to this conductor. As a result, relay 28C3 remains operated. As contacts 28C–6 thus remain closed, the two of the eight identification relays on FIG. 23 remain operated and locked to source 2301.

With relay 25AUX released, the four control conductors are connected in their normal manners, conductors 9T1 and 9R1 being connected to the primary of transformer 2601, and conductors 9T2 and 9R2 being connected through various contacts and diodes to relays 25A, 25B, 25R and 25L. The central office again applies a greater positive potential to conductor 9R2 and a lesser one to conductor 9T2 which causes only relay 25L in the field unit to operate. The first operation of relay 25L caused relay 28LA to operate as contacts 28C3–5 were then closed. However, as relay 28C3 is now operated, contacts 28C3–5 are now open and relay 28LA does not operate. However, contacts 28C3–8 are now closed and relay 28LB thus operates, current flowing from source 2802 through contacts 28LR–4, resistor 2801, the coil of relay 28LB, and contacts 28C3–8 and 25L–1 to source 2806. Contacts 28LB–1 close and relay 25AUX operates. Contacts 25AUX–7 open and the central office unit is notified that relay 25L has operated for the second time. Although relay 25L releases when the positive potential is removed from its coil, relay 28LB remains operated as contacts 28LB–2 have closed. The discharge of capacitor 2507 through conductor 25C1′ maintains this relay operated until conductor 22C1′ is connected to source 2201 after the operation of one or two of identification relays 22ID–1 through 22ID–4 and maintains relay 28LB operated as it did relay 28LA.

When relay 28LB operates, contacts 28LB–14 close and negative source 2885 is connected through these contacts and now closed contacts 25C3–19 to the coil of relay 28C3. Relay 28C3 thus remains operated independent of the discharge of capacitor 2809. To insure that relay 28C3 not release before contacts 28LB–14 close, contacts 25L–8, which close before contacts 28LB–14, are connected in parallel with the latter. The time during which relay 28C3 is held by the discharge of capacitor 2809 is thus reduced.

The central office unit after being notified that relay 25L has operated for the second time applies the identify-

ing potentials to the control wires. One or two of identification relays 22ID–1 through 22ID–4 operate and cause conductors 22C1 and 22C1′ to be connected to source 2201. The latter connection maintains relay 28LB operated. The former connection causes relay 25C1 to operate. Relay 25C1, in operating, connects conductors 9T2 and 9R2 to identification relays 22ID–5 through 22ID–8 and one of these identification relays operates if only one of the first four previously operated. With two of the eight identification relays operated, conductor 22C2 is connected to source 2201 and again if conductor 22BLK is unenergized, that is, no control relays have erroneously operated, relay 25C2 is operated. This second operation of relay 25C2 is an indication that both trunk identities are stored, one in the identification relays on FIG. 23 and the other in the identification relays of FIG. 22. At this time the local connection may be established.

It will be recalled that to establish a local connection the two line switch hold magnets are not released. The two subscribers remain connected to the same two respective links to which they were originally connected. The two trunk switch hold magnets however must be released and then reoperated. They must be released in order that the two trunks connecting the two subscribers to the central office be disconnected from the two respective links in the trunk crossbar switch or switches. After the release of the two trunk switch hold magnets they must be reoperated to connect the same two links connected to the two subscribers to the same local trunk. The two trunk switch hold magnets are reoperated only after stearing level select magnets 8 or 9 have operated in both switches and select magnets 7 have operated as well in both switches. As described above, if horizontal select magnet 7 is operated in both trunk switches and the same steering level select magnet is operated in both trunk switches, the two links will be connected to the same local trunk whether or not these links are in the same trunk switch or different trunk switches.

When relay 25C2 operates, contacts 25C2–1 on FIG. 21 close. At this time, normally open contacts 28LB–3 and 28LB–4 are similarly closed. Relay 29K0 is operated whenever the first local trunk comprising conductors 15TX0, 15RX0 and 15SX0 is in use, and relay 29K1 is operated whenever the second local trunk comprising conductors 15TX1, 15RX1, and 15SX1 is in use, the operations of these relays to be described below. If the first local trunk is not in use the potential of source 2105 is extended through contacts 25C2–1, 25CK–1, 28LB–4 and 29K0–1 directly to the coils of trunk switch steering level select magnets 21TSMA8 and 21TSMB8. On the other hand, if the first local trunk is already in use, the second local trunk must now be connected to the two particular subscribers involved in the local connection. If the first local trunk is already connected to two other subscribers, relay 29K0 is operated and contacts 29K0–1 are open. However, contacts 29K0–2 are closed and if the second trunk is not also in use, with relay 29K1 unoperated, the potential of source 2105 is extended through contacts 29K0–2 and 29K1–1 to the coils of trunk switch steering level select magnets 21TSMA9 and 21TSMB9. In this manner the same numbered trunk switch steering level select magnet in each trunk switch is operated, with the first preference being for the first local trunk. Only if this trunk is already in use is the second local trunk selected instead.

For any local connection to be made, trunk switch horizontal select magnets 21TSMA7 and 21TSMB7 must be operated. As contacts 28LB–3 are closed, it is seen that potential source 2105 is directly connected to the windings of these two magnets which therefore operate.

With two trunk switch select magnets operated in each switch, the negative potential of source 2107 is extended to conductors 2108 and 18HM. However, relay 17HMA and 17HMB are not yet operated as contacts 17LHK–2 are now open. Relays 17HCA and 17HCB are, however, operated, these relays having operated when contacts 28LB–5 closed and connected sources 1711 and 1730 to each other through the coils of the two relays.

When relay 25C2 operates it also causes contacts 25C2–5 to close. As contacts 28LB–11 are also closed, current flows through the lower winding of relay 25CK. At the same time, however, current flows through the upper winding of relay 25CK and the relay thus remains unoperated. Current flows from source 2504 through contacts 28LB–12, the upper winding of relay 25CK, conductor 23CKA, contacts 17HCB–20, 17HCA–20, 28C3–10, and 25C2–2, conductor 19TS, the translating network on FIG. 19 controlled by the identification relays on FIG. 22, that one of conductors 9SA0 through 9SAB19 whose trunk identity is represented by the operated identification relays of FIG. 22, cable 950, one of the trunk switches, that of one of conductors 12SAG0–1 through 12SAG3–5 or 15SBG0–1 through 15SBG3–5 connected to the energized trunk sleeve, the winding of the identified trunk switch hold magnet, the respective one of conductors 1302–0 through 1302–19 or 1502–0 through 1502–19, the particular line switch hold magnet contacts 14LHA0–2 through 14LHA19–2 or the analogous contacts in the hold magnet circuit for line switch B, one of 40 conductors 14HCA0 through 16HCB19, one set of contacts 17HCA–0 through 17HCB–19, conductor 1710, and contacts 28C3–20, 28LB–7 and 17LHK–5 to negative source 1740. At the same time, current in conductor 23CKA also flows through contacts 17HCB–21, 17HCA–21, 28C3–11, and 25C2–6 to conductor 23TS′. This current flows through the translating network of FIG. 20 which is controlled by identification relays 23ID–1′ through 23ID–8′ to that one of conductors 9SA0 through 9SAB19 whose trunk identity is stored in these identification relays. Thus in a similar manner current flows through the trunk switch hold magnet winding connecting the other subscriber to the other identified trunk. Both trunk switch hold magnets release, and the trunk switch crossbar connections controlled by these magnets are opened.

The two associated line switch hold magnets do not release during the local connection sequence. One end of the winding of each of the line switch hold magnets is connected to conductor 14HG or 16HG which at this time are connected to conductor 1410, through contacts 28LR–3, 25R1–1 and 28LB–6 to positive source 2800. The potential difference across the operated line switch hold magnets is in the direction necessary to operate these magnets. Thus all operated line switch hold magnets remain operated, including the two line switch hold magnets associated with the two trunk switch hold magnets being released.

When both trunk switch hold magnets release, current ceases to flow through the sleeve conductors of the crossbar switches connected to crosspoints controlled by these hold magnets. At this time, current through the top winding of relay 25CK ceases and the relay operates as only the lower winding is energized. This relay checks that both trunk switch hold magnets have released. If either one remains operated, current continues to flow through the upper winding, and through either one of the translating networks of FIGS. 19 and 20 and the trunk crossbar switches. Only after both trunk switch hold magnets release does relay 25CK operate.

When relay 25CK operates, contacts 25CK–1 on FIG. 17 close. Current now flows from source 1713 through the coil of relay 17LHK, contacts 28LB–13, 28C3–4 and 25CK–1, conductor 1721 and one or two sets of contacts 22ID–1–5 through 22ID–4–5 to source 2201. Relay 17LHK operates and causes contacts 17LHK–2 to close. At this time, the negative potential on conductor

18HM is extended through the coils of relays 17HMA and 17HMB to positive source 1714 and the relays operate. Contacts 17HMA–22 close and lock relays 17HMA and 17HMB until contacts 17LHK–2 open. Relays 17HMA and 17HMB operate only after contacts 17LHK–5 open and remove source 1740 from the cathode of diode 1716, the operation being similar to that described above in the regular connection sequence.

With the operation of relays 17HMA and 17HMB, contacts 17HMA–0 through 17HMB–19 close. As contacts 17LHK–4 are now closed, negative source 1720 is connected to all of conductors 14HMA0 through 16HMB19. This negative potential is extended through contacts 14LHA0–1 through 14LHA19–1 and the analogous contacts in the hold magnet circuit for line switch B of all operated switch hold magnets to one end of the windings of all trunk switch hold magnets having their associated line switch hold magnets operated. Thus the negative potential of source 1720 is connected not only to the coils of trunk switch hold magnets already operated but to the coils of the two trunk switch hold magents previously released as the two line switch hold magnets associated with these trunk switch hold magnets did not release. The negative potential of source 1720 is now applied where the negative potential of source 2504 was previously applied, it being necessary to now operate the two priorly released trunk switch hold magnets rather than to release them. Source 2504 is no longer applied as the crosspoint connections have opened.

The other ends of the windings of these trunk switch hold magnets were priorly connected through conductors 14HCA0 through 14HCA19, and 16HCB0 through 16HCB19, and contacts 17LHK–5 to negative source 1740. A positive potential must now be substituted for this negative potential. The operation of relay 17LHK causes contact 17LHK–5 to open and the negative potential is removed. Conductor 1710, connected to the 40 HC leads, is now connected through contacts 17HMB–22 and 17LHK–3 to positive source 1714. Current thus flows through the windings of all the previously operated trunk switch hold magents including the two trunk switch hold magnets priorly released in such a direction as to operate them. The currents have no effect on the operated trunk switch hold magnets. The two priorly released magnets, however, reoperate and connect the two subscribers to either of the two local trunks depending upon which trunk switch steering level select magnet in each switch was operated together with trunk switch select magnets 21TSMA7 and 21TSMB7.

When the crosspoints close, the two conductors of conductors 12SAG0–1 through 12SAG3–5 and 15SBG0–1 through 15SBG3–5 which are connected to the two priorly released and now reoperated trunk switch hold magnets are connected through one or both trunk crossbar switches to each other and to the sleeve of the selected local trunk. The negative potential on these conductors thus appears on either conductor 15SX0 or 15SX1. Relay 29K0 must operate and remain operated whenever the first local trunk is in use, and relay 29K1 must do likewise whenever the second local trunk is in use. It will be recalled that contacts 29K0–1, 29K0–2 and 29K1–1 of FIG. 21, controlled by these two relays, determine which trunk switch steering level select magnets are operated. For the control circuit of FIG. 29 to determine which local trunk should be used for the next local connection, it is necessary to now operate that one of relays 29K0 and 29K1 corresponding to the local trunk now put in service. The negative potential on either of conductors 15SX0 or 15SX1 is extended through cable 1510 to FIG. 29. If this potential is on conductor 15SX0, relay 29K0 has not yet operated as the first local trunk was just now put in use. The negative potential is extended through contacts 29K0–4, diode 2905, conductor 29XC, break contacts 25CK1–B, and the coil of relay 25CK1 to positive source 2511. Relay 25CK1 operates. If the first local trunk was previously in use, the second local trunk was just selected and the negative potential appears on conductor 15SX1. As relay 29K0 is already operated, contacts 29K0–5 are closed. In this case, the negative potential on contactor 15SX1 is extended through contacts 29K1–3 and 29K0–5, diode 2905, conductor 29XC, contacts 25CK1–B, and the coil of relay 25CK1 to positive source 2511. In either case, relay 25CK1 operates and contacts 25CK1–M close before contacts 25CK1–B open. Relay 25CK1 thus locks over contacts 25CK1–M and contacts 28LB–10, 25C2–4 or 28C3–9. It remains operated until after the local connection has been established and all of relays 28LB, 25C2, and 28C3 have released. When relay 25CK1 operates, contacts 25CK1–4 and 25CK1–5 on FIG. 29 close. The negative potential on either conductor 15SX1 or 15SX0 is now extended through either break contacts 29K1–B, the primary coil of relay 29K1, and contacts 25CK1–5 to positive source 2901, or through break contacts 29K0–B, the primary coil of relay 29K0, and contacts 25CK1–4 to positive source 2902. The respective one of relays 29K0 or 29K1 thus operates depending upon which local trunk is selected. If relay 29K0 operates, contacts 29K0–B open but only after contacts 29K0–M close. At this time, negative source 2903 is connected through contacts 29K0–M, the primary coil of relay 29K0, and contacts 29K0–3 as well as contacts 25CK1–4 to positive source 2902. Relay 29K0 thus remains operated even after relay 25CK1 releases. This relay remains operated for the duration of the local connection involving the first local trunk. Similarly, if relay 29K1 operates, contacts 29K1–2 close and connect positive source 2901 to negative source 2904 independent of contacts 25CK1–5.

Relays 29K0 and 29K1 indicate which local trunks are in use. It is necessary, however, to include other means to provide the two subscribers with talking battery, and in addition to provide supervisory means to determine when they hang up. If the first local trunk has been connected to the two subscribers, the tip conductors of both subscribers are connected through respective resistors such as resistors 1130 or 1230 to conductor 15TX0 and the ring conductors of both subscribers are connected through respective resistors such as 1131 and 1231 to conductor 15RX0. Current now flows from positive source 2906 through one coil of relay 29S0, conductor 15TX0, the tip conductors of both subscribers, through their respective telephones, the ring conductors of both subscribers, conductor 15RX0, the second winding of relay 29S0, and contacts 28LB–8 to negative source 2907. Relay 29S0 thus operates. Contacts 29S0–1 close and negative source 2910 is connected through these contacts and contacts 29S0′–1 to the second winding of relay 29S0. The relay thus remains locked even after contacts 28LB–8 open. This relay remains operated for the duration of the local call until current ceases to flow through the relay windings. The cessation of this current flow will be described below in the section dealing with the release of a local connection.

Similarly, if the second local trunk is now put in service, positive source 2908 is connected to negative source 2911 through conductors 15TX1 and 15RX1, both windings of relay 29S1, and contacts 28LB–9. Relay 29S1 operates and contacts 29S–1 close. Negative source 2912 is now connected through contacts 29S1–1 and 29S1′–1 to the lower winding of relay 29S1 and this relay remains operated even after relay 28LB releases. Talking battery is thus supplied to the two subscribers on the local connection until the call is terminated.

Capacitors 2942 and 2943 are across the tip and ring conductors of respective local trunks. They bypass the relay windings, and lower the transmission level to that of the original connection via the trunks to the central office.

When relay **25CK1** operates, contacts **25CK1–2** on FIG. 22 close and again potential source **2211** applies a negative potential to the unused wire of the second control pair, or to conductor **9T2** if neither is used. The central office is thus notified that the local connection has been established. The second set of identifying potentials is removed from the control conductors and the two operated ones of relays **22ID–1** through **22ID–8** release. Conductors **22C1** and **22C2** thus de-energize and relays **25C1** and **25C2** release. The release of these two relays cause all other control relays in the field unit to release. The only relays that remain operated are relays **29K0** and **29S0** if the first local trunk is in use, and relays **29K1** and **29S1** if the second local trunk is in use. It should be noted that only two local connections may be made. If both local trunks are in use, both of relays **29K0** and **29K1** are operated and contacts **29K0–1** and **29K1–1** on FIG. 21 are open. Thus neither of steering level select magnets **8** or **9** may be operated in response to a command to establish a local connection. In fact, the central office unit does not transmit a command to establish a local connection if both local trunks are in use.

After a local connection is established, the central office unit transmits scan pulses over the first control pair after a delay of 125 milliseconds. By this time, transistor **26R** has timed out and counter **2400** is reset. Line scanning resumes with the first line in the next group to be scanned, the group being determined by the polarity of the scan pulses transmitted.

(2) SUMMARY OF SIGNAL INFORMATION TRANSMITTED BETWEEN CENTRAL OFFICE AND FIELD UNITS FOR LOCAL CONNECTION

When the common control determines that a local connection is to be established, the particular central office unit involved places a greater positive potential on conductor **9R2** and a lesser positive potential on conductor **9T2**. The field unit notifies the central office unit of its recognition of the signal by opening conductor **9T2**. The central office then applies identifying potentials representing the trunk connected to the first local subscriber to the control conductors. After the field unit has stored this information in identification relays **23ID–1′** through **23ID–8′**, the check signal is transmitted to the central office unit over the unused wire of the second control pair, or conductor **9T2** if neither conductor has thereon an identifying potential. The central office then applies a second pair of positive potentials to conductors **9R2** and **9T2** to reoperate relay **25L** in the field unit. The field unit again opens conductor **9T2** when relay **25AUX** operates. The central office then applies the second set of identifying potentials representing the second trunk, connected to the second local subscriber, to the control conductors. After the field unit establishes the local connection, a second check signal is transmitted to the central office unit which then removes the second set of identifying potentials from the control conductors. After 125 milliseconds, scan pulses are transmitted from the central office unit to the field unit to control the line scanning at the field unit.

G. *Local connection release*

(1) DETAILED DESCRIPTION OF FIELD UNIT OPERATION

Although thus far only a local connection at the field unit has been described, it must be borne in mind that a similar connection is made in the central office unit. Connections are extended between respective conductors of the line circuits of the two locally connected subscribers. This insures that other telephone users calling the subscribers are provided busy tone for the duration of the call. Thus when the subscribers terminate their call, not only must the particular one of the two local trunks in the field unit that was used for the call be released but, in addition, the field unit must notify the central office unit which of the two local trunks in the central office unit must now be released.

Only the field unit may recognize the release of the local connection as no trunks are extended to the central office unit whose D.C. condition is dependent upon the on-hook or off-hook conditions of the two subscribers involved in the local connection. Although the field unit must notify the central office unit which of the two local trunks is to be released, the normal trunk identification information is not required, that is, the normal 2-out-of-8 codes identifying one or two of the 20 trunks connecting the central office and field units are not needed to release a local connection. Rather, information is transmitted from the field unit to the central office unit and the identification is 1-out-of-2 rather than 1-out-of-20.

When the subscribers on a local connection both hang up their receivers, current ceases to flow through conductors **15TX0** and **15RX0**, or **15TX1** and **15RX1**. Although the crosspoint connections are still maintained, both subsets present open circuit conditions. Thus, relay **29S0** or **29S1** releases. The release of either of these relays indicates that the crosspoints establishing the local connections in the field and central office units must be released. It is first necessary for the field unit to notify the central office unit that the connection, or connections if both calls are terminated simultaneously, are to be released.

When the scanning of lines for a service request is interrupted for synchronization purposes after a group of 64 scan pulses have been transmitted, transistor **26R** becomes active. This transistor creates a positive pulse on conductor **26R′** which resets counter **2400**. This same pulse is also extended along conductor **24LP** to FIG. 29. Whichever local trunk was previously in use but is now to be released now has its **K0** or **K1** relay operated and its **S0** or **S1** relay released. If the first local trunk is to be released, the pulse on conductor **24LP** is extended through closed contacts **29K0–6** and now closed contacts **29S0–2** to conductor **29LP1**. If the second local trunk is to be released, the pulse on conductor **24LP** is extended through closed contacts **29K1–4** and now closed contacts **29S1–2** to the same conductor **29LP1**. It is only after a local trunk is in use with its respective **29K0** or **29K1** relay operated and after it is determined that it is to be released with its respective relay **29S0** or **29S1** released, that the pulse on conductor **24LP** is extended to conductor **29LP1**. The pulse on this latter conductor is transmitted through capacitor **2675**, diode **2672**, and capacitor **2665** to the base of transistor **26AF1**. Transistor **26AF1** goes off and transistor **26AF** thus goes on. As with a service request, a simplex pulse is transmitted over the first control pair to the central office unit. The central office unit recognizes that the simplex pulse occurs during the 5 milliseconds between group scans and thus recognizes that the simplex pulse represents an indication that one or both local connections are to be released rather than representing a service request.

Once the central office unit recognizes that one or both local connections are to be released, further control is placed under the central office unit. Further scanning is inhibited not only for the remaining part of the 5 milliseconds between scans but until the local connections have been released in both units. The central office unit transmits a signal over control pair 2 to notify the field unit that the central office unit has received the simplex pulse. Different magnitude negative potentials are transmitted along conductors **9T2** and **9R2** to operate relays **25A** or **25B** to establish a regular connection. Different magnitude positive potentials are applied to conductors **9T2** and **9R2** when it is necessary to release a trunk and relay **25R** operates. Different magnitude positive potentials are transmitted over conductors **9R2** and **9T2** to operate relay **25L** when it is necessary to establish a local connection. For the release of a local connection the central office unit applies equally large positive potentials to both of conductors **9T2** and **9R2**, and as a consequence both

of relays 25R and 25L operate. These positive potentials indicate that the common control will release the local connection or connections in the particular concentrator unit. If two or more of the eight units require local connection releases, the common control operates on only one of them at this time, the other releases being effected in succeeding periods between group scans. Only that concentrator unit to be operated upon at this time has the positive potentials applied to its conductors 9T2 and 9R2.

Since both of relays 25R and 25L operate, it is necessary to inhibit further action at the field unit that would normally ensue in response to the operation of either of these relays individually. That is, the field unit must not treat the operations of both relays 25R and 25L as indications of a trunk release and the establishment of a local connection. The operation of the trunk release circuitry depends upon the operation of relay 25R1 immediately after the operation of relay 25R. Relay 25R1 normally operates when contacts 25R–1 close. However, as contacts 25L–6 and 25R–7 are now closed, it is seen that both ends of the coil of relay 25R1 are connected to the same negative potential 2511 and relay 25R1 thus remains unoperated. Similarly, the operation of the local connection circuitry depends upon the operation of relay 28LA. Relay 28LA is also prevented from operating when contacts 25L–6 and 25R–7 close. Only relay 28LR is operated by the simultaneous energizations of relays 25R and 25L. Relay 28LR is the relay which controls the operation of the circuitry for effecting the release of a local connection. When contacts 25L–7 and 25R–8 close, it is seen that current flows through the coil of relay 28LR which thus energizes. Contacts 28LR–4 open and further insure that relays 25R1 and 28LA do not operate. With contacts 25L–4 and 25R–5 closed, current flows from source 2533 through the coil of relay 25AUX to source 2534. Relay 25AUX thus operates.

Relay 28C3 is prevented from operating at this time because contacts 25R–6 and 25L–5 are closed. As contacts 28C3–15 are normally closed, negative source 2812 is connected directly to one end of the coil of relay 28C3 and thus relay 28C3 cannot operate even though conductor 28C3 now has applied to it a negative potential through contacts 28LR–7, 25L–9, and 25R–9.

The field unit must notify the central office unit that relays 25R and 25L have operated. As both conductors 9T2 and 9R2 are now in use, the central office having applied positive potentials to both of them to operate relays 25R and 25L, the field unit applies a negative potential to conductor 9T1 if the first local trunk is to be released and/or conductor 9R1 if the second local connection is to be released. If the first local trunk is to be released, negative source 2811 is connected through contacts 28C3–13, now open contacts 29S0–3, still closed contacts 29K0–7, and now closed contacts 28LR–9 to control conductor 9T1. If the second local trunk is to be released, source 2811 is connected through contacts 28C3–12, now closed contacts 29S1–3, still closed contacts 29K1–5, and now closed contacts 28LR–10 to conductor 9R1. Contacts 28LR–1 and 28LR–2 are now open and the negative potential on conductors 9T1 and/or 9R1 cannot erroneously operate identification relays 22ID–1 or 22ID–3 over conductors 24ID–1 and 24ID–3.

The central office is thus notified that relays 25R and 25L have operated. The central office then removes the positive potentials from conductors 9T2 and 9R2 and relays 25L and 25R release. Relay 28C3 now operates. Relay 28LR is held operated by a capacitor discharge even though contacts 25L–7 and 25R–8 are now open, capaictor 2809 discharging through contacts 28LR–6 and either contacts 29K0–8 and 29S0–4, or 29K1–6 and 29S1–4, through the coil of relay 28LR. As contacts 28LR–7 remain closed and contacts 25R–6 and 25L–5 are now open, current flows from source 2804 through resistor 2803, the coil of relay 28C3, contacts 28LR–7, conductor 28HC3 and either contacts 29K0–9 and 29S0–6 to source 2910, or contacts 29K1–7 and 29S1–6 to source 2912, or both, if both local connections are to be released. Relay 28C3, in operating, opens contacts 28C3–12 and 28C3–13 and thus removes the negative potential from either or both of conductors 9T1 and 9R1. As contacts 28C3–16 and 28C3–17 are now closed, conductors 9T1 and 9R1 are connected respectively to conductors 23–5′ and 23–7′, these conductors being directly connected to the coils of respective relays 23ID–5′ and 23ID–7′.

The negative potential having been removed from one or both of conductors 9T1 and 9R1 notifies the central office unit that these conductors are now connected to respective relays 23ID–5′ and 23ID–7′. The central office unit then reapplies the positive potentials to conductors 9T2 and 9R2 and relays 25R and 25L reoperate. Relay 28C3 remains operated although contacts 25R–6 and 25L–5 close because now contacts 28C3–15 are open. And contacts 25L–9 and 25R–9, which are now closed and connect negative source 2886 to the coil of relay 28C3 maintain this relay operated even after contacts 29K0–9 or 29K1–7 later open. The central office unit then applies negative potentials to both of conductors 9T1 and 9R1 causing relay 23ID–5′ and/or relay 23ID–7′ to operate. Relay 23ID–5′ operates if the first local trunk is to be released, that is, if contacts 29S0–3 are now closed. Relay 23ID–7′ operates if the second local trunk is to be released and contacts 29S1–3 are now closed. Current flows through conductor 9T1 only if the first local trunk is to be released, and current flows through conductor 9R1 only if the second local trunk is to be released. It is the currents flowing through conductors 9T1 and 9R1 at this time that notify the central office unit which of the two local trunks is to be released.

Contacts 25L–10 through 25L–13 and 25R–10 through 25R–13 on FIG. 20 are now closed and positive source 2010 is connected to both of conductors 20KOU and 20KOL and/or 20KIU and 20KIL depending upon which of contacts 23ID–5′–4 and 23ID–5′–5 and/or 23ID–7′–3 and 23ID–7′–4 are operated. These potentials are extended through cable 2020 to FIG. 29. A positive potential on conductor 20KOU causes current through the upper winding of relay 29K0 to cease as both ends of this winding are connected to equal positive potentials. However, relay 29K0 does not yet release. The positive potential on conductor 20KOL is extended through the lower winding to conductor 15S0 and through the trunk sleeve crosspoints to one end of each coil of the two particular trunk hold magnets holding these crosspoints operated. At this time, the other end of the coil of every trunk switch hold magnet is connected through the coil of its associated line switch hold magnet to conductors 14HG or 16HG which are now connected through contacts 28LR–8, 28C3–14, 25L–5 and 25R–6 to negative source 2812. Current flows through the particular line and trunk switch hold magnets establishing connections to the first local trunk, both hold magnets release, and the crosspoints open. At this time, current ceases to flow through conductor 15SX0 and since the lower winding of relay 29K0 is no longer energized relay 29K0 releases.

On the other hand, if the second local trunk is to be released, the positive potential on conductor 20K1U causes current through the upper winding of relay 29K1 to cease. This relay remains operated, however, because of the current flow through conductor 20K1L, the lower winding of relay 29K1 and conductor 15SX1. The line and trunk switch hold magnets maintaining the second local connection release in a similar manner and when current ceases to flow through conductor 15SX1 relay 29K1 releases.

When the operated ones of relays 29K0 and/or 29K1 release, the negative current originally flowing through conductors 9T1 and/or 9R1 cease as contacts 29K0–7 and/or 29K1–5 on FIG. 28 are now open. This notifies

the central office unit that the local connection or connections have been released at the field unit. When the central office unit similarly completes the release of one or both of the local connections in the central office unit, the positive potentials on conductors **9T2** and **9R2** are removed. The field unit relays restore and the two control pairs are connected for line scanning when relay **25AUX** releases. After 125 milliseconds, line scanning resumes.

Again, during the entire switching sequence transistor **26AF1** is held on as a safety precaution. Contacts **25C2–7** on FIG. 26, and the contacts of relays **23ID–5′** and **23ID–7′** connecting source **2030** to conductor **26HSR** maintain the transistor conducting. It remains on in the local connection release sequence until the last of relays **25C2, 23ID–5′** or **23ID–7′** releases.

The release of a local connection is initiated only when relays **29S0** or **29S1** release. It has been assumed above that both subscribers hang up their receivers and that current ceases to flow through conductors **15TX0** and **15RX0**, or conductors **15TX1** and **15RX1**, thus causing the respective relays to release. However, it is possible that only one subscriber on a local connection will hang up. In the event that the other subscriber remains off-hook, e.g., due to a failure on his part to properly place his receiver on-hook, current still flows through the local trunk connected to this subscriber. This is due to the fact that the tip and ring conductors of both subscribers are connected in parallel to respective tip and ring conductors of a local trunk. Were the local connection not released, the local trunk connected to the still off-hook subscriber would be tied up indefinitely until he were to hang up his receiver. For this reason, means are provided to cause relays **29S0** or **29S1** to release even if only one subscriber hangs up and current still flows through the windings.

When one of the two subscribers on the first local trunk hangs up, although an infinite impedance does not appear between the tip and ring conductors of the local trunk, a greater impedance than was priorly between these conductors does appear. Both subsets were previously connected to the tip and ring conductors of the local trunk. Two impedance circuits in parallel were thus both connected between the tip and ring conductors of the local trunk, and when one of these impedances is removed or made infinite the total impedance between the local trunk tip and ring conductors is increased. As a result, the positive potential on conductor **15TX0** increases slightly in magnitude and the negative potential on conductor **15RX0** similarly increases in magnitude. Diode **2926** is normally reverse biased, the positive potential on its cathode from source **2924** being slightly greater than the positive potential on its anode connected to conductor **15TX0**. When one subscriber hangs up and the positive potential on conductor **15TX0** increases in magnitude, diode **2926** is forward biased. Diode **2927** is normally reverse biased, the negative potential on its anode from source **2925** being greater in magnitude than the negative potential on its cathode connected to conductor **15RX0**. When one subscriber on the local connection hangs up, the slightly increased magnitude negative potential on conductor **15RX0** forward biases diode **2927**.

The positive pulse on conductor **24LP** is not transmitted to conductor **29LP1** as contacts **29S0–2** are still open. However, contacts **29S0–5** are closed and thus the positive pulse on conductor **24LP** is transmitted through capacitor **2918** and diode **2915**. If only one subscriber on the first local trunk has hung up, this pulse is transmitted through capacitor **2921**, diodes **2926** and **2927** to the base of transistor **29TS0**. Similarly, as contacts **29S1–5** are closed, the diode network comprising diodes **2928** and **2929** and potential sources **2922** and **2923**, connected to the second local trunk, permits this pulse to pass to the base of transistor **29TS1** in the event that one subscriber on the second local trunk is still off-hook.

Transistors **29TS0** and **29TS1** are normally active, the voltage dividing network between sources **2935** and **2934** normally maintaining the base of transistor **29TS0** negative, and the voltage dividing network between sources **2936** and **2937** normally maintaining the base of transistor **29TS1** negative. Transistors **29TS0′** and **29TS1′** are normally passive, collector currents from respective transistors **29TS0** and **29TS1** maintaining positive potentials on the bases of transistors **29TS0′** and **29TS1′**. The positive pulse from conductor **24LP** through either diode gate network momentarily turns off respective transistors **29TS0** or **29TS1**. Thus transistors **29TS0′** or **29TS1′** momentarily conduct. If the first local trunk is to be released, current flows from the collector of transistor **29TS0′** through the coil of relay **29S0′** and contacts **29S0–1** to source **2910**. Relay **29S0′** operates. Contacts **29S0′–2** close and relay **29S0′** thus remains operated even after transistor **29TS0′** turns off. With relay **29S0′** operated, contacts **29S0′–1** open. Current no longer flows through conductors **15TX0** and **15RX0** and relay **29S0** releases. Contacts **29S0–1** open and relay **29S0′** releases as well. With relay **29S0** released, the local connection will be released when the next positive pulse is applied to conductor **24LP** and is transmitted through now closed contacts **29S0–2** to conductor **29LP1** in the normal manner.

Similarly, if only one subscriber on the second local trunk has hung up, the positive pulse transmitted through capacitor **2918** and diode **2915** is now transmitted through the diode gate comprising diodes **2928** and **2929** to the base of transistor **29TS1**, transistor **29TS1′** momentarily conducts, and relay **29TS1′** operates. This relay locks over its contacts **29S1′–2**. Contacts **29S1′–1** open and relay **29S1** releases. When contacts **29S1–1** open, relay **29S1′** releases as well. The local connection involving the second local trunk is released with the next application of a positive pulse to conductor **24LP** which is transmitted through now closed contacts **29S1–2** to conductor **29LP1**.

The subscriber whose receiver is still off-hook would now cause a new service request in the normal manner. The call would be set up as usual over one of the 20 trunks extended to the central office unit. It is necessary that this regular connection be established in order that equipment in the central office time out and connect the off-hook subscriber to a permanent signal trunk.

(2) SUMMARY OF SIGNAL INFORMATION TRANSMITTED BETWEEN CENTRAL OFFICE AND FIELD UNITS FOR LOCAL CONNECTION RELEASE

The sequence for the release of a local connection initiates with the application by the field unit of a simplex pulse to the first control pair. This pulse is only applied between group scans and thus the central office unit is notified that it represents a request to release a local connection rather than a service request. The central office unit then applies positive potentials to both of conductors **9T2** and **9R2** to operate relays **25R** and **25L** in the field unit. The field unit notifies the central office unit of its recognition of these potentials by applying negative potentials to either or both of conductors **9T1** and **9R1**. The central office unit then removes the positive potentials from conductors **9T2** and **9R2**. Relay **28C3** then operates in the field unit and removes the negative potentials from conductors **9T1** and/or **9R1**. This notifies the central office unit to reapply the positive potentials to conductors **9T2** and **9R2** which cause relays **25R** and **25L** in the field unit to reoperate. Then the central office unit applies negative potentials to both of conductors **9T1** and **9R1**. Conductor **9T1** is connected to relay **23ID–5′** only if the first local trunk is to be released. Conductor **9R1** is connected to relay **23ID–7′** only if the second local trunk is to be released. Relays **23ID–5′** and/or **23ID–7′**

then operate and cause the local connections at the field unit to release. The negative potential applied by the central office unit to conductor **9T1** causes current flow through this conductor to operate relay **23ID–5'** only if the first local trunk is to be released and contacts **29S0–3** are closed. Current flowing through this conductor is an indication to the central office unit that the first local trunk is to be released. The negative potential applied by the central office unit to conductor **9R1** causes current to flow through this conductor and to operate relay **23ID–7'** only if the second local trunk is to be released and contacts **29S1–3** are closed. Current flowing through this conductor notifies the central office unit that the second local trunk is to be released. Both central office and field units release their local connections. When the field unit has completed the release of the first local trunk, relay **29K0** releases and current ceases to flow in conductor **9T1**. If the second local trunk is to be released by the field unit, current ceases to flow in conductor **9R1** after the release of this trunk with the corresponding release of relay **29K1**. When no currents flow through conductors **9T1** and **9R1** the central office unit is thus notified that the one or two releases of local connections at the field unit have been effected. When the central office unit completes the release of its local connection or connections it removes the positive potentials from conductors **9T2** and **9R2** and both central office and field units restore to normal. Line scanning then resumes after 125 milliseconds with the scanning of the first line in the next group.

III. CENTRAL OFFICE UNITS AND COMMON CONTROL

A. *General description*

The common control located at the telephone central office serves eight pairs of central office and field concentrator units in the illustrative embodiment of the invention. An individual central office unit, the counterpart of the field unit described in detail above, is shown in FIGS. 30–46. The common control is shown in FIGS. 48–65. Although only one central office unit is shown in detail the common control serves another seven as well. These seven central office units are shown symbolically in FIG. 47. Although connections are shown between the common control and central office unit 0, the drawing indicates multiple connections where they exist; that is, all conductors and cables connecting the common control to central office unit 0 are shown to be extended to central office units 1–7 as well.

Referring to FIG. 47, each of the seven central office units shown symbolically is connected to its respective field unit, these connections being identical to the manner in which the central office unit and field unit disclosed in detail are connected to each other. Similarly each of these seven central office units is indicated as being connected to both the central office and the common control. The connections are similar to the connections of FIGS. 30–46 to the central office and common control. The eight individual central office units are connected to each other by only two conductors **4637** and **4710**, the purpose of these connections to be described below.

Each central office unit is a switching device compressing 128 subscriber line circuits on to 20 trunks. Each of these 20 trunks comprises tip and ring conductors only. Although line and trunk switches A and B provide sleeve connections, trunk sleeves are not extended to the field unit. The switching plan of the central office unit is identical to that of the field, with six trunks individual to trunk switch A, six to trunk switch B, and eight common to both. Each line switch serves 64 subscriber line circuits.

Each central office unit must perform four sequences of operations as does each field unit. These include regular connections, trunk releases, local connections, and local connection releases. The connections established by any individual central office unit under the command of the common control may be summarized as being the same as those in the field unit where subscriber line circuits in the central office are analogous to subscribed lines in the field unit.

B. *Switching scheme of each central office unit*

Line switch A is shown in detail in FIGS. 30–33. Trunk switch A is shown in detail in FIGS. 34–37. Line and trunk switches B are shown symbolically in FIGS. 38 and 40, respectively. The line and trunk switches in both central office and field units are similar. The major difference is that the field switches are of the magnetic latching type. Once a hold magnet is operated in a field switch it remains operated until it is energized by current flowing in its winding in the opposite direction. For a hold magnet in the central office unit switches to remain operated, however, current must be continuously supplied to the hold magnet winding.

Each line switch serves 64 subscriber line circuits, each comprising a tip, ring, and sleeve. Each of the first eight horizontals of either line switch serves eight subscribers. Again, the twenty links are divided into four groups of five links each, and each pair of two lines in each horizontal can be connected only to the five links in a respective group. Thus each group of five links serves 16 lines as in the field unit. Horizontals 8 and 9 are steering levels as in the field unit.

The 128 line circuits in central office **3001** may be connected to each other by intra-office trunks. Crossbar switch **3010** is shown to illustrate symbolically the manner of establishing these connections.

Each of the trunk switches contains four groups of five links each, each link being connectable to any one of the 14 trunks in the same switch depending upon which one of the two steering level trunk switch select magnets and which one of the first seven trunk switch select magnets are operated. Again the two trunks controlled by trunk switch select magnet 7 in each trunk switch are connected to each other as in the field unit. The connection is different however, for it is not necessary to supply talking battery at the central office unit as it is at the field. In the central office it is only necessary to connect the two subscriber line circuits to each other in order to provide busy tone for incoming calls to either one of them. Supervision must be provided however, as in the field, to determine which of the two local trunks should be selected for each new local connection established. It will be seen that the resistors in the trunk switches at the field unit connected to the two local trunks are not included in the trunk switches of the central office unit. This is due to the fact that talking battery need not be supplied.

C. *Switching information required for central office unit operation*

Because the switching plan is the same for both central office and field units the information required by the central office unit for each of the four operations is essentially the same as that required by the field. This information is derived from the common control and individual central office unit, and for a local connection release from the field unit.

(1) REGULAR CONNECTION SWITCHING INFORMATION

The central office unit transmits scanning pulses of a positive or negative polarity depending upon which group of subscriber lines 0–63 or 64–127 is being scanned. The pulses advance a counter in each of the eight field units. When a service request originates at either the central office or field unit the common control thus has available the identity of the subscriber requiring service. As each subscriber is served by only one group of links, the central office unit need merely select the lowest numbered idle link in the group, and connect it to the line requiring

service. The central office common control selects the particular trunk to be employed, and causes the central office unit to establish the connection and to transmit the trunk identity to the field unit. The common control operates only on that central office unit serving the subscriber requiring service. In a manner to be described below, the other seven central office units remain unaffected by control signals from the common control when the common control operates upon any one of the eight central office units.

(2) TRUNK RELEASE SWITCHING INFORMATION

The common control in the central office detects when a trunk must be released. The identity of the trunk is transmitted to the field unit, and as described above in Section II C2, due to the connection of the line and trunk switch hold magnets through the trunk switches to the sleeve of the identified trunk, identifying a trunk, in effect, identifies the line to which it is connected and the link establishing the connection as well. Similar remarks apply to the central office unit, and the identification of a particular trunk by the common control is all that is required to release the trunk, link, and line connections.

(3) LOCAL CONNECTION SWITCHING INFORMATION

As described in Section II C3 above, a local connection is established in the field unit by transmitting to it the identity of the two trunks connected to each other. Idenifying the two trunks in the field unit is sufficient not only to release the trunks but in addition to identify the two links connected to each other through these trunks, A local connection is then established. In a similar manner identifying the two trunks at the central office unit is all that is required to initiate the establishment of a local connection.

(4) LOCAL CONNECTION RELEASE SWITCHING INFORMATION

The remote unit detects the termination of a call by one or both of the two local subscribers. The central office need transmit no information to the field. Instead the field unit notifies the central office unit which of the two local trunks is to be released. Identifying a local trunk automatically results in the identification of the two lines connected to it due to the connection of the line and trunk switch hold magnet windings through the trunk switches to the trunk sleeves.

D. *Regular connection—Detailed Description of Central office unit and common control operations*

The astable multivibrator comprising transistors **65T0** and **65T1** oscillates at approximately 500 cycles per second. When transistor **65T1** conducts, the base of transistor **65T0**, connected to the collector of transistor **65T1** is more positive than its emitter and transistor **65T0** remains off. Similarly when transistor **65T0** conducts transistor **65T1** remains off. The switching back and forth of the multivibrator is controlled by capacitors **6531** and **6519**. With transistor **65T1** conducting capacitor **6531** charges until the junction of capacitor **6531** and resistors **6530** and **6532** is sufficiently negative in potential to forward bias the emitter-base junction of transistor **65T0**. At this time transistor **65T0** conducts and transistor **65T1** turns off. Capacitor **6519** now charges, and when it has charged sufficiently to forward bias the emitter-base junction of transistor **65T1** the astable multivibrator changes state once again.

With transistor **65T0** active, 1500 microseconds are required to charge capacitor **6519** sufficiently to turn on transistor **65T1**. It requires 500 microseconds to charge capacitor **6531** sufficiently when transistor **65T1** is conducting to again change the state of the astable multivibrator. The combined time of operation per cycle is thus 2000 microseconds and the multivibrator oscillates 500 times per second

The astable multivibrator comprising transistors **65T0** and **65T1** controls the count stored in counter **6100**. This counter, comprising stages **61STR**, **61GP1** and **61GP2**, and **61HOR1** through **61HOR3** identifies a particular line out of 64. The six stages of the binary counter can identify 26 or 64 lines. To identify a particular line in either line switch it is necessary to select one of eight horizontals, one of four groups, and one of two steering levels. The state of stage **61STR** identifies the steering level, stages **61GP1** and **61GP2** identify the group, and the last three stages of counter **6100** identify the horizontal. When a particular stage of counter **6100** is in the 0 state a positive potential appears at the 0 output of the stage and a negative potential at the 1 output. Similarly when in the 1 state, a positive potential appears at the 1 output and a negative potential at the 0 output.

Conductor **65AST1** connects the input of the first stage of the counter to the collector of transistor **65T1**. Whenever transistor **65T1** turns on, a positive pulse appears at its collector and counter **6100** advances one count. Five hundred microseconds after transistor **65T1** turns on, it turns off, and transistor **65T0** turns on for 1500 microseconds. It is during this 1500 microseconds that lines are scanned. The counter is advanced by the turning on of transistor **65T1** prior to the scan controlled by the turning on of transistor **65T0**.

Flip-flop **61A/B** is similar to a stage of counter **6100**. The count of the counter identifies one of 64 lines, and the state of flip-flop **61A/B** identifies a particular one of the two groups of 64 lines each. When in the 0 state output 0 of the flip-flop is positive and output 1 is negative. Similarly when in the 1 state output 1 is positive and output 0 is negative. Positive pulses, when applied to conductor **61PR** change the state of flip-flop **61A/B**. These pulses are also transmitted to the reset terminals of each of the six stages of counter **6100** and reset all six of these stages to the 0 state.

The six stages of counter **6100** and flip-flop **61A/B** control the scanning of a particular one of the 128 lines in each concentrator unit. The eight transistors **55TA0–55TB3** are normally nonconducting and only one of these transistors, under the control of flip-flop **61A/B** and counter **6100**, conducts at any one time. Each of these transistors identifies one of the four groups of links in a particular one of the pairs of switches A and B. It is also necessary to identify not only a particular one of the two pairs of switches and a particular group of links, but in addition a particular one of eight horizontals and one of the two steering levels in order to identify any given line. The 16 transistors **55TH80–55TH87** and **61TH90–61TH97** are normally nonconducting, and only one conducts at any given time under the control of counter **6100**. When transistor **61TH94** conducts, for example, the line being scanned is in horizontal 4 and is connected to one of the five links serving it by the operation of line switch steering level select magnet 9. One of the eight transistors **55TA0–55TB3** and one of the sixteen transistors **55TH80–61TH97** conducting, together identify one of 8 x 16 or 128 lines.

Conductors **55A0–55B3** are normally negative in potential. When the respective transistor conducts however a more positive potential appears on each conductor. These conductors are extended by cable **5556** to central office unit 0. The common control controls the scanning of the same numbered line in each of the eight concentrators simultaneously. For this reason, conductors **55A0–55B3** are also extended to the other central office units as shown by the designation "to C.O.U. 1–7." Similar remarks apply to conductors **55H80–61H97** which are extended by cable **5557** to central office unit 0 and to the other central office units as well.

Particular pairs of transistors shown on FIGS. 55 and 61 are energized by means of AND gate circuits. All of the AND gates shown, such as gate **5502**, are of the type whose output is positive in potential unless both of the

applied inputs are negative in potential. A particular example will illustrate the control of the transistors by the counter stages, flip-flop 61A/B, and the AND gates. Consider that flip-flop 61A/B is in state 1 and the six stages of counter 6100 represent the binary number 010001. Negative potentials thus appear at the 0 outputs of flip-flop 61A/B and stages 61GP1 and 61H0R3. Negative potentials similarly appear at the 1 outputs of stages 61STR and 61GP2–61HOR2. All of the AND gates on FIG. 61 connected directly to the outputs of the stages of counter 6100, only AND gates 6103, 6105, and 6110 are energized. The outputs of these gates are thus negative. The output of gate 6103 is one input of AND gates 5507 and 5503. The other input of AND gate 5503 is connected through resistor 5500 to the 1 output of flip-flop 61A/B which is positive in potential. Thus AND gate 5503 does not operate. However, the other input of AND gate 5507 is connected through resistor 5501 to the 0 output of flip-flop 61A/B which is negative in potential. Transistor 55TB1 conducts and a positive pulse appears on conductor 55B1.

The outputs of AND gates 6105 and 6110 are both connected to respective inputs of AND gate 5514, and this AND gate is the only one of the AND gates associated with transistors 55TH80–61TH97 that is energized. Thus the only one of these transistors that conducts is transistor 55TH84 and a more positive potential appears on conductor 55H84.

The two conductors 55B1 and 55H84 identify a particular one of the 128 lines. The line is in switch B and is connectable to link group 1. The line is also in horizontal 4 and connectable to a link by the operation of steering level select magnet 8. This line corresponds to the line identified by flip-flop 61A/B and counter 6100. Flip-flop 61A/B, being in the 1 state, identifies the B switch. Stage 61STR, being in the 0 state identifies steering level 8. Stages 61GP1 and 61GP2, together forming the binary number 10, identify link group 1. And finally, stages 61HOR1–61HOR3, containing the binary number 001, identfy horizontal 4.

The sixteen transistors 55TH80–61TH97, although controlled by respective AND gates do not operate until a negative pulse is applied to conductor 65P. This conductor is connected by respective resistors to the base of each of these transistors, and the simultaneous application of a negative potential at the output of the respective AND gate and a negative pulse on conductor 65P is required to turn on a transistor. Conductor 65P is pulsed when the astable multivibrator changes state and transistor 65T0 conducts. It is during the 1500 microseconds of conduction of transistor 65T0 that the line identified by flip-flop 61A/B and counter 6100 is scanned. The scanning cycle initiates when transistor 65T0 turns on and causes transistor 65TP to be pulsed. This in turn energizes the selected one of transistors 55TH80–61TH97. When transistor 65T0 turns on a positive pulse appears at it collector. This positive pulse is transmitted through capacitor 6514 and resistor 6505 to the base of transistor 65TP. Transistor 65TP is normally nonconducting and the positive pulse at its base turns it on. The negative pulse now produced at the collector of transistor 65TP is applied to conductor 65P and turns on the particular selected one of transistor 55TH80–61TH97.

It should be noted that the six stages of counter 6100 correspond to the six stages of counter 2400 in the field unit. The first stage in each identifies the steering level, the next two the group, and the last three the horizontal. Thus the same line is scanned at both the field and central office units. Although counter 6100 is advanced when transistor 65T1 turns on, the line at the central office is not scanned until transistor 65T0 turns on and causes conductor 65P to be pulsed. This pulse also controls the transmission of a positive or negative polarity scanning pulse to the field unit. During scanning negative source 4507 is connected through contacts 46IA0–1 to the bases of transistors 45PA and 45BP. Transistor 45PA however does not conduct as long as there are idle trunks serving trunk switch A. Similarly, transistor 45PB does not conduct if there are idle trunks serving trunk switch B. The common control causes the central office unit to transmit scan pulses to the field unit the actual pulses, of either polarity, being developed by transistors 45PR and 45PT. If transistor 45PA is on, the base of transistor 45PT is greater in potential than the emitter and transistor 45PT cannot develop the scanning pulse on the tip of control pair 1 even when the common control attempts to energize it. Similarly, when transistor 45PB is on, the common control cannot energize transistor 45PR. The energization pulses are derived from the collector of transistor 65TP. When transistor 65T0 of the astable multivibrator turns on a negative pulse appears on conductor 65P′. This negative pulse is extended through cable 6262 to the basis of both transistors 45PR and 45PT. The negative pulse attempts to turn on both of these transistors. However, flip-flop 61A/B causes one of these transistors to be inhibited. Conductors 61–0 and 61–1, connected respectively to the 0 and 1 outputs of flip-flop 61A/B are extended through cables 6113 and 6262 to the collectors of respective transistors 45PB and 45PA. When flip-flop 61A/B is in the 0 state the positive potential on conductor 61–0 prevents transistor 45PR from turning on. As a result, the negative pulse on conductor 65P′ causes only transistor 45PT to conduct. Similarly when flip-flop 61A/B is in the 1 state, the positive potential on conductor 61–1 applied to the base of transistor 45PT enables only transistor 45PR to conduct when the negative pulse is applied to conductor 65P′. When transistor 45PR conducts a positive pulse is applied at its collector. This pulse is transmitted by transformer 4532 and filter 4533 to conductors 45R1 and 45T1. These conductors are the ring and tip of the first control pair and are extended via cable 4550 to the field unit. The ring being positive with respect to the tip notifies the field that flip-flop 61A/B is in the 1 state and that lines in the B switch are being scanned.

Similarly when flip-flop 61A/B is in the 0 state transistor 45PT controls the transmission of a pulse to the field unit over the tip and ring conductors of control pair 1 with the tip positive in potential with respect to the ring. During scanning contacts 46TR1–1 and 46TR1–2 are closed and the pulses from the secondary of transformer 4532 are transmitted to the field.

The central office unit transmits scan pulses to the field unit only if it is possible to serve a line in the particular switch being scanned. If the common control is controlling the scanning of the lines in the A switches in all eight concentrator units it is apparent that if the 14 trunks serving the A switches in a particular concentrator are all busy service cannot be provided to another line in the switch. For this reason transistor 45PA is made to conduct if there are no trunks available to serve subscribers in line switch A, and transistor 45PB is made to conduct if there are no trunks available to serve subscribers in line switch B. The conduction of either one of these transistors inhibits the respective one of transistors 45PT or 45PR from operating.

The twenty trunks entering the two trunk switches A and B are shown in FIGS. 35, 37, and 40. These twenty trunks, 35A0–35A5, 35AB12–37AB19, and 40B0–40B5, each contains tip, ring, and sleeve conductors. These conductors are extended via cable 3501 to FIG. 44. The tip and ring of each of the twenty trunks, identified by the designations 44A0–44AB19 are extended to the field unit via cable 4450. The sleeve of each of the trunks is connected through a respective resistor 4402 to ground and in addition to a respective one of conductors 44SA0–44SAB19.

The twenty conductors, 44SA0–44SAB19 are extended via cable 4432 to FIG. 45. The fourteen of these conductors connected to sleeves of trunks serving trunk switch

A, conductors **44SA0–44SA5** and **44SAB12–44SAB19**, are all connected through respective diodes **4502** and resistor **4511** to the base of transistor **45PA**. The fourteen of these conductors connected to sleeves of trunks serving trunk switch B, conductors **44SB0–44SB5** and **44SAB12–44SAB19**, are all connected through respective diodes **4502** and resistor **4510** to the base of transistor **45PB**.

When a trunk is in use a negative potential is applied to its sleeve as will be described below. If it is not in use, the sleeve is at ground potential, the ground coming through the respective one of resistors **4402**. Thus, an idle trunk causes the associated diode or diodes **4502** to be forward biased, while a busy trunk produces a reverse bias. Although source **4507** attempts to forward bias both transistors **45PA** and **45PB**, each of these transistors is held nonconducting by a ground appearing through any one of the fourteen diodes connected to its base. If at least one trunk serving trunk switch A is idle, ground potential is extended through one or more of diodes **4502** and resistor **4511** to reverse bias the emitter-base junction of transistor **45PA**. Similarly, if at least one trunk serving trunk switch B is idle, transistor **45PB** is held off. When these two transistors do not conduct, scanning pulses are transmitted by either transistor **45PR** or **45PT** depending upon the state of flip-flop **61A/B**.

On the other hand, if all fourteen trunks serving trunk switch A are busy, transistor **45PA** conducts and prevents transistor **45PT** from pulsing when conductor **65P′** is energized even if flip-flop **61A/B** is in the **0** state. Scanning pulses are thus not transmitted to the field unit if it is impossible to provide service. Similar remarks apply to transistors **45PB** and **45PR** and the fourteen trunks serving trunk switch B.

If all the trunks serving one of the two trunk switches are busy, counter **2400** in the particular field unit is not advanced as no scanning pulses are transmitted. Counter **6100**, on the other hand, in the common control is advanced by the pulses appearing on conductor **65AST1**, as lines served by the other seven concentrator units can be served and are still scanned for service requests. The two counters are thus out of synchronism. However, this has no effect on the circuit as no regular connections may be set up. The field unit cannot transmit the simplex service request pulse to the central office unit because the field unit is not told to scan any lines as the scan pulses are not originally transmitted from the central office unit. And the central office unit is likewise controlled not to recognize service requests by lines served by a trunk switch, all of whose fourteen trunks are busy. If at least one trunk in trunk switch A is idle, ground potential is extended through resistor **4503** to conductor **45A**. Similarly, if at least one trunk in trunk switch B is idle, ground potential is extended through resistor **4504** to conductor **45B**. On the other hand, if all trunks in either trunk switch are busy, the negative potential of source **4507** is extended through resistors **4505** or **4506** or both to respective conductors **45A** and **45B**. A negative potential on conductor **45A** will be seen below to prevent the recognition of service requests by line circuits 0–63, served by trunk switch A. Similar remarks apply to conductor **45B**, line circuits 64–127, and trunk switch B.

Counter **6100** and counter **2400** in a particular field unit are out of synchronism when all fourteen trunks serving a particular 64 lines are busy. When one of the trunks becomes idle scan pulses are once again transmitted to the field unit and scanning is no longer inhibited at the central office unit. It is now necessary to resynchronize the counters to each other. Were this not so, the two end units would treat a service request as originating from two different lines. It is thus necessary to resynchronize the counters when one of the previously fourteen busy trunks becomes idle. In the illustrative embodiment of the invention trunks must be released by the two end units as trunks do not release automatically when one or both parties hang up. As a consequence, a trunk cannot become idle unless a regular connection release or a local connection sequence has been performed at both end units. And, as described above, after either of these operations, both counters reset to zero. They are thus synchronized to each other when line scanning resumes.

Scanning initiates when the astable multivibrator on FIG. 65 changes state, transistor **65T0** conducts, and conductors **65P** and **65P′** are pulsed. The pulse on conductor **65P′** controls the transmission of a scan pulse to the field unit. The pulse on conductor **65P** controls the scanning at the eight central office units. One of the sixteen transistors **55TH80–61TH97** conducts when conductor **65P** is pulsed. One of transistors **55TA0–55TB3** is conducting at this time, these transistors being controlled directly by flip-flop **61A/B** and counter **6100**.

The sixteen conductors **55H80–61H97** are extended via cable **5557** to FIG. 38. Each of these sixteen conductors is connected to sleeves of four lines in line switch B. Each of these sixteen conductors is additionally connected to four of the sixty-four conductors comprising cable **3802**, each of these conductors being connected to the sleeve of a line in line switch A. For example, conductor **55H80** is connected to the four lines in line switch A and the four lines in line switch B, all eight of which are in a zero horizontal and controlled by steering level 8. Conductor **55H80** is thus connected to sleeves **S0**, **S16**, **S32**, **S48**, **S64**, **S80**, **S96** and **S112**. As seen in line switch A, the sleeve of each line is connected to a respective resistor **3201** and to a respective diode **3202**. Similar remarks apply to line switch B. The positive pulse on any one of the sixteen conductors **55H80–61H97** is transmitted through four of capacitors **3203** and four analogous capacitors in line switch B to four of diodes **3202** and four analogous diodes in line switch B. Thus, the scanning pulse is applied to the anodes of eight of the 128 diodes connected to the sleeves of the lines.

The 128 diodes are multipled to eight conductors. Conductor **32A0** is connected to the sixteen diodes in line switch A which are connected to the sleeves of lines served by line group 0. Similar remarks apply to conductors **32A1–32A3**, of which only conductor **32A3** is shown in the drawing. Similarly, the sixty-four diodes in line switch B are coupled to the four conductors **38B0–38B3** which are extended to FIG. 32 via cable **3803**.

The energization of one of conductors **55H80–61H97** applies a pulse to eight of the 128 diodes in the line switches, each of these diodes being connected to a line served by a different group of links. Thus, each of the eight conductors **32A0–38B3** is connected to one diode to which the pulse is applied. For a particular line to be scanned, it is necessary to select one of these eight conductors. This final step is obtained by the positive potential appearing on one of conductors **55A0–55B3**. Diodes **3206** are normally reverse biased. That one of conductors **55A0–55B3** having a positive potential causes the associated one of diodes **3206** to be less reverse biased. Diodes **3207** are in parallel with their respective resistors in order that one of respective capacitors **3299** be rapidly conditioned by the positive potential appearing on the respective one of conductors **55A0–55B3**. When the positive potential is removed, the respective capacitor discharges through the resistor connected in parallel with its respective diode **3207**.

If the particular line being scanned does not desire service a negative potential appears on the sleeve. If the line does require service ground potential is applied instead. The central office supplies these potentials and the particular type of central office with which the line concentrator of the invention is utilized does not affect the latter's operation provided the central office applies

these two potentials to the sleeve of the line for the two respective conditions. The central office **3001** is shown symbolically only as are the means for applying the potentials to the sleeve leads. Switch **3003** is connected to either ground potential or negative source **3002**. Line 0 is shown extended to the central office. Cables **3006** and **3801** extend the other 127 lines to the office where similar ground potentials are applied to the sleeve leads to indicate service requests.

When a particular line circuit does not desire service the sleeve is negative in potential and the associated one of diodes **3202** or the analogous diodes in line switch B is reverse biased. The positive pulse on a particular one of conductors **55H80–61H97** is not transmitted through the diode. If the line does desire service and the sleeve is thus grounded, the positive pulse is transmitted through the diode and through one of diodes **3206** to conductor **32S**. A pulse on conductor **32S** indicates that the line whose identity is stored in flip-flop **61A/B** and counter **6100** desires service, the service request originating at the central office unit.

A particular example will illustrate the scanning circuit. Consider flip-flop **61A/B** to be in the 0 state and counter **6100** to contain the binary number 011000. The line being scanned is thus in the A switch, served by steering level 8 and link group 3, and is in horizontal 0. Line 47 is this line. Of conductors **55A0–55B3**, all are at the negative potential of source **5552** except conductor **55A3** which is more positive in potential. Accordingly, of the eight diodes **3206** only that one connected to conductor **32A3** is forward biased. When conductor **65P** is pulsed a positive pulse appears on conductor **55H80**. If at this time the diode **3202** connected to the sleeve of line 47 is forward biased, the positive pulse on conductor **55H80** is transmitted through this diode and through the selected one of diodes **3206** to conductor **32S**. If, on the other hand, the line does not desire service and the diode connected to the sleeve of line 47 is reverse biased, the positive pulse of conductor **55H80** is not transmitted to conductor **32S**.

In the absence of a service request by either end unit, scanning proceeds in the normal manner. It is only when the positive pulse appears on conductor **32S** or a simplex pulse is received from the field unit that the regular connection sequence is initiated.

It has already been described in this section that if all 14 trunks serving the particular 64 lines being scanned are busy, scan pulses are not transmitted to the field unit as it is impossible to provide service to a line requesting it at this time. In this way, lines at the field unit are not scanned if they cannot be provided with service. Line scanning is also inhibited in the central office unit in such a case as explained above. Conductor **45A** is positive in potential unless all of the trunks serving line switch A are busy. Similarly, conductor **45B** is positive in potential unless all 14 trunks serving line switch B are busy. Conductors **45A** and **45B** are extended by cable **4501** to FIG. 32. Conductor **45A** is connected through four of diodes **3208** to the four conductors **32A0–32A3**. Conductor **45B** is connected through the other four of these diodes to conductors **38B0–38B3**. If at least one trunk of those serving line switch A is idle, conductor **45A** is positive in potential and the four diodes **3208** to which it is connected are reverse biased. The scanning circuit is unaffected. However, if all 14 trunks are busy conductor **45A** is negative in potential and this potential is extended through the four diodes to conductors **32A0–32A3**. The four diodes **3206** connected to these conductors are reverse biased and even if pulses are transmitted through diodes **3202** to conductors **32A0–32A3** the four diodes **3206** connected to these conductors do not pass the pulses to conductor **32S**. Similar remarks apply to conductor **45B** and the scanning circuit for line switch B. In this manner a service request pulse on conductor **32S** is inhibited if it is impossible to provide the line with service.

In order for a line to be provided with service it is not only necessary that one of the 14 trunks serving it be available but, in addition, that one of the five links serving the line be free as well. As described above, scanning in the field unit of those lines served by a link group all of whose links are busy is inhibited. The central office unit likewise inhibits scanning of those lines for which service cannot be provided due to the unavailability of a link in the particular group serving the line. As seen on FIG. 32, if conductor **42GBA0** is negative in potential the respective one of the diodes **3206** is reverse biased in the same manner as it is when a negative potential is applied to conductor **45A**. A negative potential on conductor **42GBA0** thus inhibits scanning of a line whose sleeve is connected to conductor **32A0**. As conductor **32A0** is connected to the sleeves of all lines served by link group 0 of line switch A it is seen that a negative potential on conductor **42GBA0** inhibits scanning of lines in this group. Similar remarks apply to conductors **42GBA1–39GBB3**, there being eight of these conductors in all, one for each of the four link groups in each switch.

A negative potential is applied to any one of these eight conductors when all five links in the associated group are busy. The circuit for deriving this potential is similar to that of the field unit. Conductors **42GBA0–39GBB3** are extended through cables **3901** and **4201** to the hold magnet circuits of both trunk switches. The four conductors **42GBA0–42GBA3** are extended to the hold magnet circuit for trunk switch A and the four conductors **39GBB0–39GBB3** are extended to the hold magnet circuit for trunk switch B. Negative source **4204** is connected through respective resistors **4205** and the normally open contacts **42THA0–1** through **42THA19–1** to these conductors. Trunk switch A hold magnets **42THA0–42THA4** control the contacts in series with conductor **42GBA0**. If all five of these trunk switch hold magnets are operated, indicating that the five links in group 0 are in use, the negative potential of source **4204** is extended to conductor **42GBA0** and inhibits the line scanning circuit. Similar remarks apply to the five sets of normally opened contacts in each of the remaining seven conductors **42GBA1–42GBA3** and **39GBB0–39GBB3**.

A pulse on conductor **32S** indicates a service request. In the event that no service request is indicated, counter **6100** continues to cycle and scan lines in alternate switches. When counter **61HOR3** returns to its 0 state, indicating that the count stored in counter **6100** has just changed from 63 to 0, a positive pulse is produced on conductor **61P5**. Transistors **62T5** and **62T6** form a monostable multivibrator. Transistor **62T5** is normally conducting and the positive potential at its collector, coupled to the base of transistor **62T6** through resistor **6236** maintains this transistor nonconducting. The positive pulse on conductor **61P5** is transmitted through capacitor **6237** and diode **6238** to the base of transistor **62T5** which turns off. Transistor **62T6** now conducts and applies a positive pulse through capacitor **6225** to the base of transistor **62T5** which maintains this transistor nonconducting. The monostable multivibrator is maintained in its unstable state until capacitor **6225** charges sufficiently from the collector current of transistor **62T6**. At this time the base of transistor **62T5** is once again sufficiently negative in potential, this negative potential being derived from source **6228**, to forward bias the emitter-base junction of the transistor, and the monostable multivibrator switches to its stable state. The monostable multivibrator stays in the unstable state for five milliseconds. When it is first switched to the unstable state the collector of transistor **62T6** increases in potential. This positive potential holds off transistors **65TA** and **65TB** in order that a local connection release request from a field unit be recognized. This positive potential is also extended along conductor **61PR** to reset the six stages of counter **6100** and to

change the state of flip-flop 61A/B. The six stages of counter 6100 are already reset at this time and the reset pulse on conductor 61PR further insures that the stages are reset to the initially zero count. Flip-flop 61A/B is switched in order that the other group of lines may now be scanned.

It will be recalled that scanning is inhibited for five milliseconds after each group of 64 scans in order that the counter at the field unit reset. The astable multivibrator is inhibited for the duration of the unstable operation of the monostable multivibrator. After the 1500 microseconds of conduction of transistor 65T0, during the 64th scan, the astable multivibrator switches state and transistor 65T1 conducts. This transistor, in turning on, pulses conductor 65AST1 which advances counter 6100 to the initial zero count which thus triggers the monostable multivibrator. Transistor 65T1 is now held on by the monostable multivibrator for five milliseconds rather than its normal 500 microseconds. The positive potential on conductor 61PR is also extended along conductor 61PR′ and through resistors 6544 and 6532 to capacitor 6531. Capacitor 6531 is thus not permitted to charge and the astable multivibrator does not change state. After the five milliseconds of unstable state operation of the monostable multivibrator the positive potential is removed from conductor 61PR′, transistor 65T0 turns on, and the first line in the next group is scanned.

All eight concentrators scan their respective 128 lines simultaneously under the influence of the common control. The same numbered line in each concentrator is scanned at the same time. The service request originating in any central office unit results in a positive pulse appearing on conductor 32S or the analogous conductor in one of the other seven concentrators. This pulse must ready the particular central office and field units involved to establish the connection. The pulse must also notify the common control to initiate the regular connection sequence. The common control operates on each of the eight central office units. In order that only the subscriber line and line circuit in central office and field units 0 be connected to a trunk, the pulse on conductor 32S enables these units to respond to common control signals, and at the same time disables the other seven central office units from responding to the same common control signals. Similar remarks apply to the pulses on the other seven conductors, in the seven other units, analogous to conductor 32S.

The pulse on conductor 32S is extended through cable 4501 and capacitor 4614 to the base of transistor 46T0. Transistors 46T0 and 46T1 comprise the service action bistable multivibrator. Transistor 46T0 is normally conducting and transistor 46T1 is held off. The positive pulse of conductor 32S, applied to the base of transistor 46T0 turns this transistor off and causes transistor 46T1 to conduct. Current flows through the collector of transistor 46T1 which becomes more positive in potential. Current thus flows through the winding of relay 46IA0, the current flowing from the collector of transistor 46T1, through the relay winding, to negative source 4634. It is this relay that enables central office unit 0 to respond to further commands from the common control.

Source 4634 is the operating potential for not only relay 46IA0 but for the seven analogous relays in the seven other central office units as well. Conductor 4710 connects the source to the other seven relays 47IA1–47IA7. Conductor 4637 is the second conductor common to all eight central office units. When the "IA" relay in any one of the eight central office units energizes it is necessary to disable the other seven central office units. This is accomplished by insuring that the service action bistable multivibrators in the other seven units cannot change state, that is, by insuring that they remain in the reset condition with the transistors analogous to transistor 46T0 conducting. If, for example, central office unit 1 requires service, relay 47IA1 operates, contacts 47IA1–3 close, and conductor 4637 is connected to ground potential. Ground potential is thus applied through contacts 46IA0–4 and diode 4633 to the base of transistor 46T1 which thus remains off. Similarly, in the six other central office units 2–7 the transistors analogous to transistor 46T1 are held off by the ground potential on conductor 4637. Only in central office unit 1, where contacts 47IA1–4 are opened is the ground potential not applied to the service action bistable multivibrator which remains in the 1 state indicating a service request, the multivibrator having been switched by the service request pulse on the conductor analogous to conductor 32S. In this manner, whichever central office unit has its "T1" transistor in the service action bistable multivibrator conducting causes the other seven service action bistable multivibrators to have their "T0" transistors conducting.

It is the circuitry associated with conductor 4637 that holds the other service action bistable multivibrators in the reset state once one of them has been set by a service request pulse. However, this circuitry would not preclude two of the "IA" relays from operating simultaneously with the two associated service action bistable multivibrators both being set as a result. This would result if both of these "IA" relays would open their –4 contacts; the ground on conductor 4637 would not be applied to the bases of two "T1" transistors. In the illustrative embodiment of the invention only one of the eight concentrator units is operated upon by the common control at a time. Thus even if two units desire service only one is given it. This is necessary for, although the same numbered lines in two units may desire service, depending on the previous conditions of these concentrator units, different links and trunks might be selected for the present call. The common control equipment determines this selection and can make only one selection at a given time. As a result, service must be provided to only one unit at a time. It is conductor 4710 and the associated circuitry that permits only one "IA" relay to operate even though two or more service requests might be obtained at the same time. All of the service request pulses set the respective service action bistable multivibrators. All of the associated "IA" relays attempt to operate. However, only the uppermost "IA" relay whose –2 contacts open remains operated. If relay 46IA0 operates it is seen that contacts 46IA0–2 open and as a result the operating potential 4634 is disconnected from the windings of the other seven "IA" relays which are prevented from operating. Contacts 46IA0–3, in closing, cause ground potential to be applied to the "T1" transistors in the other seven service action bistable multivibrators and those of these seven that have set due to the application of service request pulses reset to the normal condition and are held there for the duration of the regular connection sequence. If, on the other hand, contacts 47IA1–2 open and 46IA0–2 do not, they prevent the "IA" relays in units 2–7 from operating. If service request pulses are obtained in both units 0 and 1 relay 46IA0 cuts off the operating potential from the winding of relay 47IA1. This is true even if relay 47IA1 operates first unless, of course, relay 47IA1 is so must faster than 46IA0 that the service action bistable multivibrator in unit 0 is reset even before relay 46IA0 has operated. Similar remarks apply to the other "IA" relays. It is unimportant which of the units desiring service receives it first. During the next scan the other units desiring service will again provide service request pulses on conductor 32S or the analogous conductors in the other units. At this time another unit will be served. It is only necessary to insure that only one service action bistable multivibrator is set at any one time in order that only one unit will be served by the common control during any switching sequence. The circuitry associated with conductors 4637 and 4710 produces this result.

The positive potential at the collector of transistor 46T1 is also applied to conductor 46SF. This potential

notifies the common control that a regular connection is to be established. The potential is extended from conductor 46SF along conductor 4820, and through resistors 6331 and 6330 to the base of transistor 63L0. Transistor 63L0 thus conducts and remains on as long as the service action bistable multivibrator is in the set condition, the 1 state.

It is also necessary to hold the astable multivibrator with transistor 65T0 conducting as further scanning must be inhibited until the connection is established. The positive potential on conductor 4820 is extended through diode 6333, conductors 6302 and 6251, and diode 6518 to the junction of capacitor 6519 and resistor 6520. Capacitor 6519 is thus prevented from charging from the collector current of transistor 65T0 to that point where diode 6521 becomes forward biased and transistor 65T1 conducts. As a result transistor 65T0 remains conducting until the service action bistable multivibrator resets at the termination of the regular connection. With the astable multivibrator inhibited from further operation the count stored in counter 6100 remains unchanged, and the identity of the line desiring service is preserved for the duration of the regular connection sequence.

In addition to notifying the common control of a service request, it is also necessary to notify the field unit that a connection is to be established. When transistor 46T0 turns off transistor 46FA conducts. This transistor is normally held off by the positive potential on the collector of transistor 46T0 being extended through diode 4623 and resistor 4605 to the base of transistor 46FA. When transistor 46T0 turns off, however, diode 4623 is reverse biased and the negative potential of source 4603 is extended through resistors 4604 and 4605 to the base of transistor 46FA thus causing it to conduct. A positive pulse is derived at the collector of transistor 46FA, current flowing from the collector through resistor 4536 and the primary winding of transformer 4534. Current is thus induced in the secondary of this transformer, this current flowing through both coils of the secondary of transformer 4532. A simplex pulse is transmitted through filter 4533 along the tip and ring conductors of control pair 1 to the field unit where it notifies the field unit of the service request.

If, on the other hand, the service request originates at the field unit, the positive simplex pulse is transmitted in the opposite direction. Again a positive potential appears across the primary of transformer 4534. This potential is transmitted through resistor 4536, diode 4607, capacitor 4611, and resistor 4612 to the base of transistor 46T0. Transistor 46T0 turns off and the service action bistable multivibrator is set. Again, relay 46IA0 operates and a positive potential is applied to conductor 46SF. The central office unit and common control are notified of the service request and prepare for a regular connection sequence in the same manner as they do when the service request pulse appears on conductor 32S and is applied to the base of transistor 46T0.

The double simplex arrangement, wherein the tip and ring conductors of both control pairs are connected to each other through the secondary windings of transformers 4534 and 4532, is used to mitigate the effect of any 60-cycle A.C. voltage induced in the control conductors, and also to cancel the effect of any differences in ground potential between the field and central office units.

With transistor 63L0 conducting, current flows from ground and through resistor 6325 to the collector of the transistor. The collector is thus negative in potential and this potential is extended through resistor 6247 and respective resistors 6545 and 6546 to the bases of transistors 65TA and 65TB. If flip-flop 61A/B is in the 0 state, indicating that the line desiring service is in line switch A, conductor 61–0 is positive in potential and this potential is applied to the base of transistor 65TB through diode 6552 and resistor 6550. This potential prevents transistor 65TB from turning on and as a result only transistor 65TA conducts. Similarly, if flip-flop 61A/B is in the 1 state only, transistor 65TB conducts, the positive potential on conductor 61–1 being extended through diode 6551 and resistor 6549 to the base of transistor 65TA to hold it nonconducting.

The conduction of either one of these transistors causes the associated relay 65A or 65B, in the collector circuits, to operate. Either one of these relays, in operating, causes contacts 65A–12 or 65B–12 on FIG. 60 to close. Ground potential is extended through either set of these contacts to conductor 60SP which is extended through cable 6004, resistor 6522 and diode 6518 to the junction of capacitor 6519 and resistor 6520. Ground potential at this junction further insures that capacitor 6119 does not charge from the collector current of transistor 65T0 and that the astable multivibrator is held in the 0 state.

Conductor 5807 is at a negative potential due to its connection through resistor 5800 to source 5801. This potential, extended through cable 5808 to FIG. 54, is applied through either now closed contacts 65A–1 and contacts 63R–6 to conductor 54TRT, or through now closed contact 65B–1 and contacts 63L–2 to conductor 54TRR. If the line requesting service is in the A switch the negative potential is applied through contacts 46IA0–13 and contacts 46TR1–3 to the tip of control pair 2 where it is extended to the field unit. On the other hand, if the line is in the B switch the negative potential of conductor 54TRR is extended through contacts 46IA0–14 and 46TR1–4 and the ring of control pair 2 to the field unit.

If the negative potential is applied to conductor 54TRT diode 5415 conducts, and current flows through this diode, the top winding of relay 54TR, resistor 5410, conductor 54TR2, resistor 4692, contacts 461IA0–5, conductor 54TR′, and diode 5413. As described in Section II, D1, the negative potential on the tip of control pair 2 is sufficient to operate relay 25A in the field unit whereas the potential on the ring is insufficient to operate relay 25B in the field unit. In this manner, although a negative potential is applied to both the tip and ring conductors of control pair 2, because only relay 25A in the field unit operates, the field unit is notified that the line being provided service is in the A switch. Similarly, if the line is in the B switch, contacts 65B–1 on FIG. 54 are closed and contacts 65A–1 are open. The negative potential on conductor 5807 is now applied directly to the ring of control pair 2 while it is applied to the tip only through diode 5414, the same winding of relay 54TR, resistors 5410 and 4692, and now diode 5412 rather than 5413. In the field unit only relay 25B operates, the negative potential applied to the winding of relay 25A being insufficient to operate this relay. In either case current flows through the top winding of relay 54TR. Although this current in itself is sufficient to operate the relay, the relay remains unoperated at this time. Contacts 65A–9 or 65B–9 are closed and an equal current flows from ground on FIG. 46, through contacts 46IA0–6, conductor 54TRS, resistor 5411, the lower winding of relay 54TR, and either contacts 65A–9 or 65B–9 to negative source 5430. Because the two windings on relay 54TR are wound in opposite directions, the two magnetomotive forces produced by currents through them at this time oppose each other and the relay remains unoperated.

The common control initiates the operation of selecting the particular link and trunk to be employed in the connection. It will be recalled that the trunk identity is not transmitted to the field unit until after the 25A or 25B relay has operated and has caused the smaller of the two negative currents flowing in the tip and ring conductors of control pair 2 to cease at which time relay 54TR operates. Although the common control does not transmit the trunk identity until after relay 54TR has operated it is nevertheless already selecting the trunk to be employed in the connection.

On FIGS. 53 and 59 are 14 trunk relay circuits **5300–5305** and **5912–5919**. These 14 trunk relay circuits determine which trunk is to be employed in the connection. Trunk relay circuits 12–19 correspond to the eight common trunks. Trunk relay circuits 0–5 correspond to both the six trunks individual to the A switches and the six trunks individual to the B switches. These six trunk relay circuits are controlled by the trunks individual to the A switch if the line requesting service is in the A switch, and by the six trunks individual to the B switch if the line requesting service is in the B switch. When contacts **65A–4** or **65B–4** on FIG. 59 close, negative source **5904** is connected to each of contacts **53TK0–B** through **59TK19–B**. At the same time contacts **65A–17** or **65B–17** close, and current flows from source **5360** through the winding of either relay **53TKA** or **53TKB** to ground. One of these two relays thus operates. The twenty conductors **52TSA0–52TSAB19** are connected via cable **5220** to respective trunk relay circuits in FIG. 53. Conductors **52TSAB12** through **52TSAB19** are connected directly to respective trunk relay circuits 12–19. Conductors **52TSA0–52TSB5** are connected to respective trunk relay circuits 0 through 5 through contacts on relay **53TKA** or **53TKB**. If the line desiring service is in the A switch relay **53TKA** has operated, contacts **53TKA–3** through **53TKA–8** are closed, and connect respective conductors **52TSA0–52TSA5** to respective trunk relay circuits 0 through 5. On the other hand, if the line is in the B switch relay **53TKB** has operated, and contacts **53TKB–3** through **53TKB–8** connect respective conductors **52TSB0–52TSB5** to respective relay circuits 0 through 5.

The 20 conductors **52TSA0–52TSAB19** are also connected to the sleeves of the 20 trunks. Contacts **43TK–1** through **43TK–20** connect these conductors through cable **5380** to the trunk sleeves on FIG. 44. A busy trunk, as will be described below, has thereon a negative potential; an idle trunk, on the other hand, is connected through a respective one of resistors **4402** to ground. The sleeve of each trunk is connected through cable **5380** to a respective one of conductors **52TSA0–52TSAB19**, and through a diode such as diodes **5313** and **5901** to one end of the winding of the respective one of the fourteen trunk relays **53TK0–53TK19**. The other ends of all the trunk relay windings are connected through respective break contacts to negative source **5904**. Thus those trunk relays associated with idle trunks and whose sleeves are at ground potential operate. Each operated trunk relay locks independent of contacts **65A–4** or **65B–4** and source **5904**. For example, if the sleeve of trunk **35A0** is at ground potential because this trunk is idle, relay **53TK0** operates and contacts **53TK0–M** close. Negative source **5316** is now connected to the winding of relay **53TK0** and the relay remains operated. Contacts **53TK0–M** close before contacts **53TK0–B** open in order that relay **53TK0** remain operated during the change of energizing potentials. Similar remarks apply to the other 13 trunk relays which operate if their respective trunks are idle.

Transistors **64T1** and **64T2** correspond to stages **61GP1** and **61GP2** of counter **6100**. Transistors **64T3–64T5** correspond to stages **61HOR1–61HOR3** of counter **6100**. Transistor **64T6** corresponds to the remaining stage of the counter, **61STR**. Contacts **65A–11** or **65B–11** connect negative source **6414** through resistors **6402–6407** to the bases of respective ones of transistors **64T1–64T6**. Negative source **6414** is greater in magnitude than the magnitudes of the potential sources connected to the emitters of these transistors and these transistors would all conduct were no other potentials applied to their base electrodes. However, it is seen that the base electrodes are connected through respective diodes **6408–6413** to the 0 outputs of the six shift register stages. Referring to FIG. 61 each of the shift register stage output conductors is identified by a two digit number. The first digit refers to the stage and the second to the 0 or 1 output. Thus conductor **30** is connected to the 0 output of the fourth stage. The ten output conductors of the first five stages are connected via cable **6170** and the normally closed contacts of relay **60LR** shown by bracket on FIG. 56, and the normally closed contacts of relay **60LB1** shown by the bracket on FIG. 57, to FIG. 64 where they are connected to the respective base electrons. The two output conductors **50** and **51** are connected directly through cable **6171** to FIG. 64 where the 0 output conductor is connected through diode **6412** to the base of transistor **64T5**. The six 1 output conductors extended to FIG. 64 are connected through respective normally closed contacts controlled by relays **64G1–64LS4** to conductor **6430**.

Although negative source **6414** is applied through respective resistors to all six base electrodes of transistors **64T1–64T6**, if a positive potential is applied through the respective diode the transistor does not conduct. Thus those of the six transistors corresponding to stages of the shift register in the 0 state, and whose 0 output conductors are positive in potential, do not turn on. Only those transistors whose 0 output conductors are negative in potential turn on. Thus, only those of transistors **64T1–64T6** corresponding to stages of shift register **6100** in the 1 state conduct. The six relays **64G1–64LS4** operate when the respective transistors conduct, collector current flowing through the winding of each of these relays. These relays identify the link group serving the line, the horizontal in which the line is contained, and the steering level controlling its connection to the links.

Those of transistors **64T1–64T6** which conduct are associated with stages of the shift register having positive potentials on their 1 output conductors. Each of these conductors is connected to conductor **6430** which is thus positive in potential. It is only after all of those of relays **64G1–64LS4** which should operate have operated, and respective contacts **64G1–1** through **64LS4–1** have closed that a positive potential no longer appears on conductor **6430**.

Conductor **6430** is connected to the base of transistor **53T** and as long as this conductor is positive in potential, transistor **53T** cannot conduct. After those of relays **64G1–64LS4** that should operate have operated the positive inhibiting potential on conductor **6430** is removed. Transistor **53T** is further inhibited from operating, however, until all of the trunk relays on FIGS. 53 and 59 which should operate have operated. The trunk relays which should operate are associated with trunks having ground potentials on their sleeves. These ground potentials are extended through conductors **52TSA0–52TSAB19**, respective diodes such as diodes **5314** and **5902**, and respective contacts **53TK0–2** through **59TK19–2** to the base of transistor **53T**. A ground potential on any one of conductors **52TSA0–52TSAB19** thus inhibits transistor **53T** from operating. However, when the respective trunk relay operates and the second set of contacts on this relay open the respective one of conductors **52TSA0–52TSAB19** is no longer connected to the base electrode. Thus when all of those trunk relays that should operate have operated transistor **53T** is no longer inhibited by the ground potential of the sleeve leads.

Contacts **65A–16** or **65B–16** on FIG. 52 are closed and extend ground potential to conductor **52SM**. Contacts **46IA0–7** on FIG. 43 are closed and relays **43SM** and **43TK** are thus operated. Contacts **43SM–10** on FIG. 43 are closed and connect negative source **4330** through conductor **4331**, either contacts **65A–7** and **53TKA–9**, or **65B–7** and **53TKB–9**, and resistor **5312** to the base of transistor **53T**. Negative source **4330** is greater in magnitude than negative source **5315** and if the inhibiting potentials are removed from transistor **53T**, this transistor conducts. Relay **530ID** in the collector circuit of transistor **53T** operates at this time. Relay **530ID** thus does not operate until the inhibiting potentials are removed from the transistor **53T**. When this relay does operate it is an indication that the six relays **64G1–64LS4** and the

14 trunk relays 53TK0–56TK19 have operated as required in preparation for identifying the link and trunk to be employed in the connection. With the operation of relay 530ID the actual identification is initiated.

With the operation of relay 530ID, contacts 530ID–2 and 530ID–3 on FIG. 59 close. Ground potential is extended through contacts 530ID–2 and either contacts 65A–5 or 65B–5 to conductor 5920. Ground is also extended through contacts 590ID–3 and either contacts 65A–6 or 65B–6 to conductor 5921. Referring back to the table in Section II D1 showing the two identification relays operated for each trunk employed, it is seen that if the trunk is one of the six individual to the A switch, the first trunk identification relay is operated together with one of trunk identification relays 3–8. If the trunk is individual to the B switch, the second identification relay is operated together with one of trunk identification relays 3–8. If the trunk is common to both switches, two of identification relays 3–8 are operated.

The contact chains on FIG. 59 control the energization of two of conductors 59ID1 through 59ID8. The ground on conductor 5920 is extended through only one set of contacts 53TK0–7 through 53TK5–7, and 59TK12–7 through 59TK19–7. If one of the six trunks individual to the switch containing the line being served is idle, ground is applied to either conductor 59ID1 or 59ID2. If the line is in the A switch, contacts 53TKA–10 are closed and conductor 59ID1 is energized. If the line is in the B switch, contacts 53TKB–10 are closed and conductor 59ID2 is energized. The particular one of the six trunks to be employed is determined by which of conductors 59ID3 through 59ID8 is similarly grounded. If the first individual trunk is idle contacts 53TK0–8 are closed and the ground on conductor 5921 is extended to conductor 59ID3. If this trunk is busy, trunk relay 53TK0 is not operated and contacts 53TK0–6 remain closed. If the second individual trunk is available contacts 53TK1–8 have closed and the ground on conductor 5921 is applied through these contacts to conductor 59ID4. In a similar manner it is seen that the ground on conductor 5921 is extended through one set of contacts 53TK0–8 through 53TK5–8 to one of respective conductors 59ID3 through 59ID8.

In the event that all six of the trunks individual to the switch containing the line being served are busy all of contacts 53TK0–5 through 53TK5–5 and 53TK0–6 through 53TK5–6 remain closed. The ground potential on conductors 5920 and 5921 are extended through these contacts to the respective contacts of trunk relays 59TK12–59TK19. If the first common trunk is idle, the ground on conductor 5920 is extended through contacts 59TK12–7 to conductor 59ID3 and the ground on conductor 5921 is extended through contacts 59TK12–8 to conductor 59ID5. Ground on these two conductors identify the first common trunk. If this trunk is busy and the second common trunk 35AB13 is idle, the ground on conductor 5920 is extended through contacts 59TK12–5 and 59TK13–7 to conductor 59ID3 once again. However, the ground on conductor 5921 is now extended through contacts 59TK12–6 and 59TK13–8 to conductor 58ID6 rather than 59ID5. Ground potentials on conductors 59ID3 and 59ID6 identify the second common trunk. In a similar manner it is seen that the lowest numbered available common trunk is selected with two of conductors 59ID3–59ID8 being grounded in the event that the six trunks individual to the switch are all busy.

Conductors 59ID1–59ID8 are connected by cable 5922 to one end of the windings of respective identification relays 58ID1–58ID8. The other end of each of the eight windings is connected to negative source 5805. The two identification relays whose windings are connected to the two ground conductors 59ID1–59ID8 are operated.

When relay 25AUX in the field unit operates, current ceases to flow through that one of the tip and ring conductors of the second control pair having applied to it the smaller of the two negative potentials. Current thus ceases to flow through this conductor and conductor 54TR2. The current in conductor 54TRS now causes relay 54TR to operate. Contacts 54TR–1 close and current flows through conductor 54TR1, contacts 46IA0–8, and the winding of relay 46TR1 to negative source 4635. Relay 46TR1 thus operates. Contacts 46TR1–5 on FIG. 43 close, and the potential of negative source 5809 is extended through either contacts 65A–15 or 65B–15, conductor 58HMW, and contacts 46TR1–5 to the windings of both relays 43HMA and 43HMB. These relays do not yet operate however until a connection is made to the other end of each winding.

When two of the identification relays 58ID1–58ID8 operate, relay 58C energizes. If both identification relays are two of relays 58ID1–58ID4, either contacts 58ID1–3 or 58ID2–3, and either contacts 58ID3–3 or 58ID4–3 have closed. Ground is extended through these two sets of contacts and current flows from source 5806 through the winding of relay 58C and through the contacts to ground. If, on the other hand, one of the first four identification relays has operated together with one of the last four, current flows from source 5806, through the winding of relay 58C, and through one set of contacts 58ID5–2 through 58ID8–2 and one of 58ID1–2 through 58ID4–2 to ground. In either case relay 58C operates indicating that two of the identification relays in the common control have operated.

Contacts 58ID1–5 through 58ID4–5, and 58ID5–4 through 58ID8–4 control the application of positive and negative potentials to conductors 58T1′, 58R1′, 58T2′ and 58R2′. Referring to the table in Section II D2 it is seen that if the first trunk individual to the A switch is selected, negative potentials are applied to both tip and ring conductors of the first control pair. The first and third identification relays are operated if this trunk is selected and the negative potential on conductor 5807 is extended through contacts 58ID1–5 to conductor 58T1′ and contacts 58ID3–5 to conductor 58R1′. Positive potential source 5803 is connected through resistor 5802 to conductor 5810. This conductor is the source of the positive potential to be applied to the control conductors. If, for example, the second of the common trunks is to be employed, the third and sixth identification relays are operated. Referring to the table, a negative potential is applied to the ring of the first control pair, and a positive potential to the tip of the second. Contacts 58ID3–5 are closed and the negative potential of conductor 5807 is applied to conductor 58R1′. With the sixth identification relay also operated contacts 58ID6–4 are closed and the positive potential on conductor 5810 is connected through these contacts to conductor 58T2′. In a similar manner two of conductors 58T1′–58R2′ have applied to them positive and negative potentials depending upon which of the twenty trunks is to be employed.

These four conductors are extended through cable 5808 to FIG. 54. Conductor 58R2′ is connected through normally closed contacts 62LCR–4 to conductor 54R2′. Conductor 58T2′ is connected through normally closed contacts 62LCR–3 to conductor 54T2′. Conductor 58R1′ is connected through normally closed contacts 62LCR–2 to conductor 54R1′ and conductor 58T1′ is connected through normally closed contact 62LCR–1 to conductor 54T1′. The four conductors 54T1′–54R2′ are connected by cable 5432 to all eight individual central office units. They are extended to central office unit 0 via cables 5432, 5436 and 5434 to FIG. 45. The four conductors 54T1′–54R2′ are connected to respective control conductors 45T1–45R2 through respective contacts 46TR1–6 through 46TR1–9 which close when relay 46TR1 operates. In this manner the trunk identity is transmitted to the field unit after the field unit has controlled the operation of relay 54TR.

In addition to transmitting the trunk identity to the field unit, this information, being the only information required by the field unit to establish the connection, it is also necessary to complete the connection in the central office unit. With relay **58C** operated contacts **58C–7** are closed. On FIG. 59 ground is extended through contacts **530ID–1**, normally closed contacts **60LA–4**, contacts **58C–7**, normally closed contacts **60CK1–3**, and either contacts **65A–2** or **65B–2** to conductor **59SMG** and either contacts **65A–3** or **65B–3** to conductor **59SMG'**. The grounds on these two conductors are extended along cable **5923** to FIG. 52. To establish a trunk connection in trunk switch A it is necessary to energize one of trunk switch select magnets **43TSMA0–43TSMA6** and one of trunk switch select magnets **43TSMA8** or **43TSMA9**. Similarly to establish a connection in the B trunk switch one of trunk switch select magnets **43TSMB0–43TSMB6** and one of **43TSMB8** or **43TSMB9** must be energized. The ground on conductor **59SMG** is extended through various contacts of the identification relays in the contact chains of FIG. 52 to one of conductors **52TSM1–52TSM6**. The particular one of these conductors selected depends upon which two of the identification relays have operated. Similarly the ground on conductor **59SMG'** is connected through the contacts of the eight identification relays to either conductor **52TSM8** or **52TSM9**, the particular steering level selected depending upon the trunk identity. Conductors **52TSM1–52TSM6**, **52TSM8** and **52TSM9** are connected via cable **5210** to FIG. 43 where they are connected through respective contacts **43SM–1** through **43SM–9** to the windings of respective trunk switch select magnets **43TSMA0–43TSMA6**, **43TSMA8** and **43TSMA9**, and **43TSMB0–43TSMB6**, **43TSMB8** and **43TSMB9**.

Negative sources **4304** or **4305** are connected to the other ends of each of these windings and two of the trunk switch select magnets in switch A and the corresponding two in trunk switch B operate. There is no differentiation at this point between the two trunk switches. Although one of the first six trunk switch select magnets in each switch as well as one of the two steering level select magnets in each switch operates, a connection will be established in only that trunk switch in which a hold magnet is operated.

Before the particular link to be employed is selected the proper line switch select magnets are also operated. Which two of the line switch select magnets in switches A and B are operated is determined by the horizontal whose identity is stored in relays **64LS1–64LS3** and the steering level whose identity is stored in relay **64LS4**. The ground potential on conductor **59SMG** is extended along conductor **5230** to FIG. 64. Conductor **5230** is connected to one of conductors **64LSM0–64LSM7**, and either conductor **64LSM8** or conductor **64LSM9**. Contacts on relays **64LS1–64LS3** determine which of conductors **64LSM0–64LSM7** is selected. Contacts on relay **64LS4** determine which of conductors **64LSM8** or **64LSM9** is chosen. The ten conductors **64LSM0–64LSM9** are connected through cable **6415** and contacts **43SM–11** through **43SM–20** to the windings of the line switch select magnets **43LSMA0–43LSMA9** and **43LSMB0–43LSMB9**. The other end of each of these windings is connected to a negative potential, and the ground on conductor **5230** causes four of the relays to operate, one of the first eight, and one of the two steering level select magnets in each switch. Again, no differentiation is made between the two line switches. A connection will be made through only that line and trunk switch pair in which hold magnets are operated.

When contacts **46TR1–5** closed a negative potential was applied to one end of the windings of each of relays **43HMA** and **43HMB**. These relays did not then operate however as no connection was made to the other ends of the windings. However, these relays operate after the trunk switch select magnets have energized. Conductor **4320** is connected to ground through one of contacts **43TSMA0–1** through **43TSMA6–1**, and one of contacts **43TSMA8–1** or **43TSMA9–1**. The conductor is also connected to ground through one of contacts **43TSMB0–1** through **43TSMB6–1**, and one of contacts **43TSMB8–1** or **43TSMB9–1**. With the ground on conductor **4320**, relays **43HMA** and **43HMB** operate. Contacts **43HMB–1** close and lock the relays independent of the ground on conductor **4320**.

The connection in the central office unit requires in addition to the operation of the line and trunk switch select and steering level magnets, the energization of the same numbered hold magnet in the A or B line and trunk switches. The hold magnets selected are the lowest numbered available in the particular group serving the line desiring service. The line and trunk switch hold magnets are not operated until after the line and trunk switch select magnets have operated. After the required trunk switch select magnets have operated, ground potential is obtained on conductor **4320**. After the required line switch select magnets have operated this ground is extended to conductor **43LH** through either contacts **43LSMA9–1** or **43LSMA8–1**, and one of contacts **43LSMA0–1** through **43LSMA7–1**. The ground is similarly extended through one of contacts **43LSMB9–1** or **43LSMB8–1**, and one of contacts **43LSMB0–1** through **43LSMB7–1**. The ground on conductor **43LH** is thus not obtained until after the required line and trunk switch select magnets have operated. The ground potential on conductor **43LH** is an indication that the hold magnet operation may proceed.

The ground on conductor **43LH** is extended through contacts **46IA0–9** to FIG. 60 where it is further extended through contacts **60LHK–B2** and conductor **60LH** to FIG. 64. Conductor **60LH** is connected to the eight conductors **64LHA0–64LHB3** through contacts controlled by relays **64G1**, **64G2**, **65A** and **65B**. Only one of relays **65A** or **65B** is operated and thus only on set of contacts **65A–10** or **65B–10** are closed. The eight conductors identify the four groups of links in each pair of switches, and particular conductor selected depends upon the group identity stored in relays **64G1** and **64G2**. These eight conductors are extended via cables **6416** and **3924** to the hold magnet circuits for trunk switches A and B shown respectively on FIGS. 42 and 39. Contacts **43TK–21** through contacts **43TK–24** on FIG. 42 are closed as are contacts **43SM–21** through **43SM–24** on FIG. 39. The contact chain controlled by the hold magnets in each of the eight conductors **64LHA0–64LHB3** are similar to those in the field unit. If the line desiring service is served by group 0 in the A switches, for example, the ground potential on conductor **64LHA0** is extended through contacts **42THA0–2** to the winding of relay **42THA0**. If the first link in group 0 is already in use, contacts **42THA0–2** are open, and instead the ground is extended through contacts **42THA0–1** to the winding of the next available trunk switch hold magnet. The particular trunk switch hold magnet selected in either trunk switch A or trunk switch B does not operate at this time however, as the other end of the winding of the magnet is no connected to an energizing potential.

The winding of each trunk switch hold magnet is connected by a respective one of conductors **41N–0** through **41N–19** and **39N–0** through **39N–19** to the winding of the same numbered line switch hold magnet **41LHA0–41LHA19** and the analogous hold magnets in line switch B. Thus, at this time a ground potential is applied to one end of the winding of one of the line switch hold magnets in a particular one of the two line switches. A negative potential is applied to the other end of each of the line switch hold magnet windings and the selected one operates at this time.

When the selected line switch hold magnet operates one set of contacts **41LHA0–1** through **41LHA19–1** or the

analogous contacts in the hold magnet circuit for line switch B close. The ground potential on the selected one of conductors **41N–0** through **41N–19** or **39N–0** through **39N–19** is extended through these contacts and either cable **4202** or cable **3930** to a respective one of conductors **42–0** through **42–19** or **39–0** through **3919**. Each of these conductors is connected through a respective one of contacts **42THA0–B** through **42THA19–B** or the analogous contacts on FIG. 39 to conductor **42HC1** or on **39HC1**. Contacts **46IA0–10** on FIG. 42 and analogous contacts on FIG. 39 are closed, and thus the ground potential on either conductor **42HC1** or conductor **39HC1** is extended via conductor **3931** and cable **3932** to FIG. 60. Contacts **60LB–17** are closed and ground is thus extended through these contacts and contacts **60LHK–B1** to one end of the winding of relay **60LHK**. The other end of this winding is connected to negative source **6015** and the relay operates at this time.

When relay **60LHK** operates it locks to ground on conductor **43LH** when contacts **60LHK–M1** and **60LHK–M2** close. Contacts **60LHK–B2** open and the ground potential that originally operated the selected line switch hold magnet is removed from conductor **60LH**. The line switch hold magnet does not release however. At this time the selected line switch hold magnet is held by another current which also causes the same numbered trunk switch hold magnet to now operate. Contacts **43HMA–1** through **43HMA–20** on FIG. 41 are closed, as are contacts **43HMB–2** through **43HMB–21** on FIG. 39. The negative potential of source **4108** causes current to flow through the winding of the selected one of line switch hold magnets **41LHA0–41LHA19**, a respective one of conductors **41N–0** through **41N–19**, the winding of the respective trunk switch hold magnet **42THA0–42THA19**, the respective one of conductors **41M–0** through **41M–19**, one of respective contacts **41LHA0–2** through **41LHA19–2**, and one of contacts **43HMA–1** through **43HMA–20** to ground. The trunk switch hold magnet did not operate prior to this time because of the ground on conductors **41N–0** through **41N–19**. This ground originated from the ground on cable **6416** which in turn was derived from the ground on conductor **60LH**. As ground was also applied to the other end of the winding of the trunk switch hold magnet through one of conductors **41M–0** through **41M–19**, no potential difference appeared across the winding of the trunk switch hold magnet. The ground, however, did cause the line switch hold magnet to operate as negative potential source **4108** is connected to the other end of this winding. With the ground now removed from conductor **60LH** ground potential is no longer applied to conductors **41N–0** through **41N–19**. Negative source **4108** now causes current to flow through the winding of the line switch hold magnet and through the winding of the trunk switch hold magnet as well. The particular trunk switch hold magnet operated after the energization of relay **60LHK** depends upon which of contacts **41LHA0–2** through **41LHA19–2** are closed at this time. This in turn depends upon which line switch hold magnet priorly operated and closed its respective contacts. If the line desiring service is served by line and trunk switches B, the line and trunk switch B hold magnet circuits on FIG. 39 operate in a similar manner rather than those on FIGS. 41 and 42.

It should be noted that although the ground is removed from the selected one of conductors **41N–0** through **41N–19** or **39N–0** through **39N–19** when relay **60LHK** operates, the operated line switch hold magnet does not release. Current immediately flows from source **4108** through the line and trunk switch hold magnet windings thus maintaining the line switch hold magnet in an operated condition.

The line and trunk switches in the field units are of the magnetic latching type. Once a hold magnet is operated it remains operated until its winding is pulsed in the opposite drecton. The swtches in the central office units, however, are not of the magnetic latching type, and a continuous energizing current is required in order to maintain the magnets operated once they are initially placed in this condition. It is also necessary once a pair of line and switch hold magnets have operated to cause a negative potential to be placed on the sleeve of the trunk employed as it will be recalled that the negative potential on the sleeve of trunks **35A0–35A5**, **35AB12–37AB19**, and **40B0–40B5** control the scanning and trunk selection operations. Once the crosspoints in the trunk switch close it is seen that the sleeve of the selected trunk, determined by the particular trunk switch select magnets operated, is connected to the sleeve of the link chosen. The sleeve of the trunk is thus connected through one of conductors **36S0–36S19** and cable **3601** or the analogous conductors on FIGS. 39 and 40 directly to one end of the winding of the operated trunk switch hold magnet. As long as relays **43HMA** and **43HMB** are operated, the trunk sleeve is connected to ground. However, as will be seen below, these relays release prior to the resumption of scanning. At this time the winding of the operated trunk switch hold magnet is no longer connected through one of conductors **41M–0** through **41M–19** or **39M–0** through **39M–19** to ground. The winding, however, is still connected to one of conductors **36S0–36S19** or **39S0–39S19**. The winding is thus connected through the trunk switch link sleeve, the trunk switch, the trunk sleeve, and one of resistors **4402** to ground. Current flows from negative source **4108** or the analogous potential source in the hold magnet circuit for line switch B, the windings of the operated line and trunk switch hold magnets, crosspoints connecting the link and trunk sleeves and one of resistors **4402** to ground. This current maintains the two hold magnets operated. In addition, the negative potential developed across the particular one of resistors **4402** provides the necessary indication that the trunk is in use. And the negative potential on the sleeve of the line just connected through the line crossbar switch reverse biases the associated one of diodes **3202** to prevent further indications of service requests by this off-hook line.

The connection is completed when the line and trunk switch hold magnets operate. Scanning is resumed after both the central office unit and the field unit notify the common control that the connection has been established. When relay **58C** initially operated contacts **58C–1** on FIG. 60 closed. Current flows from ground through these contacts, the lower winding of relay **60CK**, either contacts **65A–13** or **65B–13**, and resistor **6007** to negative source **6018**. The current flowing through the relay winding is insufficient to operate the relay. The relay only operates when current also flows through its other winding. When relay **58C** operated contacts **58C–2** on FIG. 60 also closed. Negative source **6005** was connected through resistor **6011**, either contacts **65A–14** or **65B–14**, the top winding of relay **60CK**, contacts **58C–2**, conductor **6020**, contacts **60LA–9**, and conductor **54TS** to FIG. 52. This conductor is connected through contact chains controlled by the eight identification relays to conductors **52TSA0–52TSAB19**. Each of these twenty conductors is associated with one of the twenty trunks and the particular one of these twenty conductors to which conductor **54TS** is connected depends upon the trunk identity stored in relays **58ID1-58ID8**. The twenty conductors **52TSA0–52TSAB19** are connected via cables **5220** and **5380** to FIG. 44 where they are extended through contacts **43TK–1** through **43TK–20** to the trunk sleeves. Once the connection is established and prior to the release of relays **43HMA** and **43HMB**, the trunk whose identity is stored in identification relays **58ID1–58ID8** is connected through the trunk crossbar switch and one of conductors **41M–0** through **41M–19** or **39M–0** through

39M–19, and contacts of relays 43HMA or 43HMB to ground. Thus immediately after the connection is established, ground potential is extended to conductor 54TS through the crossbar switch and at this time current flows through the top winding of relay 60CK. The relay now operates to indicate that the connection has indeed been established. The contact chain on FIG. 52 controlling the connection of conductor 54TS to one of conductors 52TSA0–52TSAB19 is provided to insure that not only has a connection been established but the correct trunk has been employed. The particular one of conductors 52TSA0–52TSAB19 which is connected to conductor 54TS depends upon the trunk identity stored in relays 58ID1–58ID8. Conductors 54TS is thus connected to the sleeve of a particular one of the twenty trunks. Only if this trunk is now in use is the ground potential extended to conductor 54TS.

It should be noted that relay 60CK operates in the regular connection sequence only when currents flow in both of its windings, either current being individually insufficient to operate the relay. In the other sequences, to be described below, it will be seen that relay 60CK operates when current flows through only its upper winding. In the regular connection sequence, the potential source for causing current flow in the upper winding is source 6005. Resistor 6011 causes a reduced current to flow that is insufficient in itself to operate the relay. Current in the lower winding is thus also required. In the other sequences however, source 6005 is not the energizing potential for the upper winding, and resistor 6011 is not included in the current path. A different source is employed and the current in the upper winding is sufficient in itself to operate the relay.

When relay 60CK operates contacts 60CK–1 on FIG. 53 close. Ground potential is extended through these contacts, contacts 60LA–3, conductor 53CK1, and contacts 60CK1–B1 to one end of the winding of relay 60CK1. This relay now operates, contacts 60CK–1–M1 close, and the relay locks through these contacts, and contacts 54TR–2 and 58C–4 to ground. Contacts 60CK1–3 on FIG. 59 open and ground potential is no longer applied to conductors 59SMG and 59SMG′. This ground on these conductors initially operated and held the line and trunk switch select magnets which release at this time.

It will be recalled that when the field unit completes its connection, a negative potential is applied to the unused conductor of control pair 2 or the tip conductor if both tip and ring are not used for transmitting trunk identity information. The negative potential on the unused conductor of control pair 2 is extended through cables 5434, 5436 and 5432 to either conductor 54T2′ or 54R2′. The potential is then extended through cable 5808 to FIG. 58. Conductor 58SK is connected to the unused one of conductors 58T2′ and 58R2′ by contacts 58ID1–4 through 58ID4–4 and 58ID5–3 through 58ID8–3. For example, if the second of the common trunks is employed in the connection identification relays 58ID3 and 58ID6 are operated. This causes a negative potential to be applied to the ring of the first control pair and a positive potential to the tip of the second. Thus the negative potential supplied by the field is applied to the ring of the second control pair. This negative potential on conductor 58R2′ is extended through contacts 58ID6–3 to conductor 58SK. The negative potential on conductor 58SK is extended along conductor 62SK to FIG. 62. If the central office unit has completed its connection, relay 60CK1 has operated and contacts 60CK1–6 are closed. The negative potential on conductor 62SK is thus applied through these contacts, diode 6210 and resistor 6209 to the anode of diode 6212. Normally this anode is connected to ground through resistor 6208, the diode being forward biased by negative potential source 6201. Thus normally the cathode of diode 6217 is at ground potential and this diode is reversed biased. Transistor 62T1 of the reset bistable multivibrator is normally nonconducting. However, when the negative potential is applied to conductor 62SK, diode 6212 is reverse biased. Ground potential is no longer applied to the cathode of diode 6217 which now conducts due to negative source 6201. The negative potential is extended to the base of transistor 62T1 which conducts. The reset bistable multivibrator thus switches state, with transistor 62T1 now conducting and transistor 62T0 turning off.

When transistor 62T1 turns on, its collector increases in potential. This increased potential is applied through contacts 60LA–6 and 54LCR1–6 to conductor 62RSA which is connected to diode 4632. The positive potential passed by this diode is applied to the base of transistor 46T1 which thus turns off. The service action bistable multivibrator switches to its normal condition with transistor 46T0 conducting. Transistor 63L0 turns off, and in turn causes the conducting one of transistors 65TA and 65TB to turn off and the operated one of relays 65A and 65B to release. With the service action bistable multivibrator restored to normal, relay 46AI0 releases. This relay in releasing in turn causes relays 46TR1, 43TK, 43SM, 54TR and 60LHK to release. The identification relays restore to normal when contacts 43TK–1 through 43TK–20 on FIG. 44 open thereby causing trunk relays 0 through 19 on FIGS. 53 and 59 to release. When the identification relays release, relay 58C releases. Relays 54TR and 58C in releasing remove the locking ground comprising contacts 54TR–2 and 58C–4 for relay 60CK1 which now releases.

When relay 60CK1 releases, contacts 60CK1–B2 close and a positive pulse is created on conductor 62TS. This positive pulse is extended along cable 6004 to FIG. 62, and through capacitor 6242, diode 6229, and resistor 6230 to the base of transistor 62T5 which now turns off. The monostable multivibrator now remains in its unstable state for 125 milliseconds rather than five milliseconds as it does after groups of 64 line scans. Capacitor 6225 controls the five millisecond operation as it charges from the collector current of transistor 62T6. But when the multivibrator is triggered by the positive pulse on conductor 62TS, it is capacitor 6242 that controls the duration of the unstable period. This capacitor charges from the positive pulse and maintains transistor 62T5 off until it discharges. The capacitor discharges through resistor 6051 into negative source 6052. It requires 125 milliseconds until the capacitor discharges sufficiently to enable transistor 62T5 to conduct once again.

When the monostable multivibrator is first placed in the unstable state the pulse on conductor 61PR resets the six stages of counter 6100 and causes flip-flop 61A/B to change state. While the monostable multivibrator is in its unstable state, the astable multivibrator on FIG. 65 is still held in its 0 state by the positive potential on conductor 61PR′. After 125 milliseconds the monostable multivibrator restores to its stable state, the astable multivibrator resumes pulsing and line scanning resumes. When the monostable multivibrator enters its stable state after 125 milliseconds the reset flip-flop of FIG. 62 is also restored to its normal condition with transistor 62T0 conducting. The positive pulse produced at the collector of transistor 62T5 when it turns on is transmitted through capacitor 6220 and diode 6218 to the base of transistor 62T1 which turns off. The field unit is ready for the new scan as transistor 26R has gone passive after 2.5 milliseconds and has reset counter 2400 to its initial 0 count.

In the event the connection is not completed within one second, the common control and individual units automatically reset. When contacts 65A–8 or 65B–8 close at the the begining of the regular connection sequence, capacitor 5420 begins to charge from negative source 5417. After one second has elapsed, the capacitor has charged

sufficiently to forward bias diode **5426** and thus to turn on transistor **5423**. Collector current of this transistor operates relay **54TM**. Contacts **54TM–3** on FIG. 60 close, and relay **60CK1** energizes. Contacts **60CK1–7** on FIG. 62 close. Contacts **54TM–2** are also closed, and the negative potential of source **6232** is applied to diode **6212**. The reset flip-flop is triggered, and the entire circuit resets. When contacts **58C–10** on FIG. 54 close, the positive potential on conductor **5810** causes capacitor **5420** to rapidly discharge. Relay **54TM** releases, contacts **54TM–1** open, and relay **60CK1** releases as well. The positive pulse on conductor **62TS** triggers the monostable multivibrator which after 125 milliseconds causes scanning to resume.

E. Trunk release—Detailed description of central office unit and common control operations

Trunk scanning proceeds simultaneously with line scanning in the eight central office units. The five counter stages **56TKR1–56TKR5**, comprising counter **5600**, identify one of 20 trunks. As counter **5600** counts to 32 and there are only 20 trunks in each unit to be scanned, 12 of the 32 counts contained within counter **5600** are unused for trunk scanning purposes. The three stages **56CON1–56CON3**, comprising counter **5601**, determine in which of the eight units the particular trunk, whose identity is stored in counter **5600**, is scanned.

Counter **5600** complets a 32 count cycle prior to the change of the count stored in counter **5601**. Thus each unit whose identity is contained in counter **5601** has all of its trunks scanned for trunk releases prior to trunk scanning in the next unit. Just as counter **5601** advances after each cycle of operation of counter **5600**, counter **5700** advances its count after each cycle of operation of counter **5601**. The five counter stages **57TKT1–57TKT5** are utilized in the local connection scanning sequence, to be described below. It will suffice at this point to note that although counters **5600** and **5601** control trunk scanning for release of a regular connection, they do so only when stages **57TKT1** and **57TKT2** of counter **5700** both contain binary 0's. In the event that either of these stages contains a binary **1**, counters **5600** and **5601** are utilized for local connection scanning in conjunction with counter **5700**.

AND gate **5715** provides a positive output potential unless both inputs are negative in which case the output is negative as well. With both stages **57TKT1** and **57TKT2** containing binary 0's the 1 outputs are negative in potential and only at this time is a negative potential applied to conductor **57R0**. The negative potential on conductor **57R0**, rather than a positive one, controls counters **5600** and **5601** to scan trunks for releases of regular connections rather than to be utilized in the local connection scanning sequence.

Conductor **65P1** is connected to the input of the first stage of counter **5600**. Each time the astable multivibrator switches to the 1 state, with transistor **65T1** turning on, the collector of this transistor becomes positive in potential. This potential, applied to conductor **65AST1**, causes counter **6100** to advance to control the scanning of the next line. At the same time counter **5600** is advanced to control the scanning of the next trunk. The negative potential of source **6543** is normally applied through resistor **6542** to conductor **65P1**. However, when transistor **65T1** conducts, the positive pulse produced at its collector is transmitted through capacitor **6536**, diode **6541**, and conductor **65P1** to the input of counter **5600**. The counter thus advances with each operation of the astable multivibrator.

Conductor **57R0** is coupled to each of the eight central office units as shown in FIG. 48. It is connected to central office unit 0 via cable **4828** extended to FIG. 44. When conductor **57R0** is positive in potential diode **4422** conducts and transistor **44CR** is inhibited. However, during trunk scanning conductor **57R0** is negative in potential and diode **4422** does not conduct. At this time transistor **44CR** is not inhibited as negative source **4423** is greater in magnitude than negative source **4424** thereby forward biasing the emitter-base junction of transistor **44CR**. Thus the negative potential on conductor **57R0** would ordinarily allow the forward biasing of transistor **44CR** and the seven other analogous transistors in the seven other central office units. Only one of these eight transistors conducts at any one time however, in order that the only trunk scanned will be that contained in the individual unit whose identity is stored in counter **5601**. The outputs of this counter are connected to eight AND gates **5716**. The eight outputs **57C0–57C7** are successively energized with a negative potential as counter **5601** advances. Each of these eight conductors is connected to a respective central office unit. Conductor **57C0** is connected to FIG. 44. When a trunk in one of the other seven units is being scanned conductor **57C0** is positive in potential and both diodes **4420** and **4421** conduct.

This positive potential reverse biases transistor **44C**. In addition the positive potential, extended through diode **4421** and resistor **4430** to the base of transistor **44CR**, inhibits this transistor even though at this time a negative potential is applied to conductor **57R0**. Transistor **44CR** conducts only when conductor **57C0** is negative in potential as well as conductor **57R0**. When transistor **44CR** does so conduct a positive potential is transmitted through diode **4426** and resistor **4415** to the base of transistor **44C**. Thus this transistor is held passive.

In summary, during trunk scanning seven of the individual units have their transistors analogous to transistors **44CR** and **44C** both nonconducting due to the positive potentials on the respective seven of conductors **57C0–57C7**. The individual unit containing the trunk to be scanned has only its transistor analogous to transistor **44CR** conducting, the associated transistor analogous to transistor **44C** being held off by the former transistor.

When the trunk being scanned is not contained within central office unt 0 the collector of transistor **44CR** is at approximately the negative potential of source **4427**. All of diodes **4404** connected to the trunk sleeves are thus reverse biased. These diodes control the trunk scanning in central office unit 0 and thus with transistor **44CR** passive trunk scanning is inhibited in this unit. When the trunk being scanned however is contained in central office unit 0, the collector of transistor **44CR** is more positive in potential and all of diodes **4404** connected to the trunk sleeves are forward biased thereby permitting trunk scanning in this unit.

Trunk scanning is accomplished by applying an 18 kc. tone to the links in the unit being scanned. A trunk priorly in use but now necessitating a release permits this tone to pass to the anode of the respective one of diodes **4404** connected to its sleeve. Those of diodes **4404** connected to the trunk sleeves are enabled in only one of the eight units under control of counter **5601**. Thus the tone is transmitted through those of diodes **4404** in this particular unit connected to trunks requiring release. It is possible for the tone to be transmitted through more than one of diodes **4404** in the particular unit whose trunks are being scanned in the event that more than one trunk requires release. Counter **5600** identifies a particular one of these 20 trunks and this counter controls the detection of the tone through only that one of diodes **4404** connected to the particular trunk identified. The five stages of counter **5600** each are designated by the letters TKR indicating that these stages control the receiving of the tone from a particular trunk.

The particular one of the 20 trunks which is scanned for the tone is determined by gates **49A0–51B5** shown on FIGS. 49, 50 and 51. Only gate **49A0** is shown in detail in the drawing. Each of these gates is provided with three conductors analogous to conductors **49SA0**, **49RA0** and

49TA0. These three conductors of each gate are connected via cable **5100** to FIG. 44 where it is seen they are connected through diodes **4404** and capacitors **4403** to the tip, ring and sleeve conductors of respective trunks. The three conductors of each gate are similarly coupled to the tip, ring and sleeve conductors of a particular trunk in each of the other seven central office units. The tip and ring connections are not utilized in trunk scanning. However, the sleeve connections control the receiving of the tone from only the sleeve of the trunk whose identity is contained within counter **5600**. Although more than one of the sleeve conductors in central office unit 0 may transmit the 18 kc. tone if more than one trunk requires release, only one of the gates **49A0–51B5** permits this tone to pass through it on one of conductors **49SA0–51SB5**. In this manner only one trunk is scanned for release at a particular time. The tone, if it appears on conductor **49SA0**, and if gate **49A0** is enabled, is transmitted through diodes **4907** and **4908**, and **4901** and **4905** to conductors **4925** and **4926**. Similarly if one of the other 19 trunks is being scanned and requires release only the gate associated with that trunk is enabled and permits the tone to pass through it to both of conductors **4925** and **4926**. As each of the conductors **49SA0–51SB5** is coupled to eight central office units it is apparent that the tone appears on conductors **4925** and **4926** if the particular one of the 160 trunks being scanned requires release.

Before describing the manner in which the tone is applied to the trunk sleeves in the first place, it will be of aid to describe the operation of gates **49A0–51B5** under the control of counter **5600**. Referring to gate **49A0** it is seen that the gate comprises two systemically symmetrical halves. The rightmost half is utilized only in the scanning sequence for local connections and will be described below. The leftmost half however is utilized in both scanning for trunk releases and local connections. Negative source **4903** would normally cause both of diodes **4901** and **4905** to be forward biased in the absence of other positive potentials at the cathodes of these diodes. If a positive potential is applied to the anode of either of diodes **4923** or **4924** it is seen that this potential is transmitted through resistor **4910** and diodes **4907** and **4908** to the cathodes of diodes **4901** and **4905**. Thus a positive potential applied to either of diodes **4923** or **4924** reverse biases diodes **4901** and **4905**. The tone on conductor **49SA0** is transmitted to conductors **4925** and **4926** only if the anodes of both of diodes **4923** and **4924** are negative in potential. Similar remarks apply to each of the other 19 gates **49A1–51B5**. Each of these gates has two diodes analogous to diodes **4923** and **4924**. Each of these diodes is connected to one of conductors 56–100XX through 56–XXX11. These nine conductors are ordinarily positive in potential and thus all of gates **49A0–51B5** are inhibited. Under control of counter **5600** various ones of AND gates **5602** are energized thereby applying negative potentials to the output conductors 56–100XX through 56–XXX11. Under control of counter **5600** these output conductors are energized in such a manner that the two diodes analogous to diodes **4923** and **4924** in only one of the 20 gates are reverse biased at a particular time thereby enabling the gate.

Only 20 of the possible 32 counts stored in counter **5600** are utilized for trunk scanning. The following table illustrates the trunk scanned for each count stored in counter **5600**. It must be borne in mind that the only trunk which is scanned for the eight trunks identified by counter **5600** is that trunk contained in the central office unit whose identity is contained in counter **5601**. It must also be remembered that the following table is valid, that is trunk scanning is accomplished under the control of counters **5600** and **5601**, only when stages 57TKT1 and 57TKT2 are both in the 0 state.

Counters 56TKR1–56TKR5	Trunk Scanned
0 0 0 0 0	Unused
1 0 0 0 0	35A0
0 1 0 0 0	35A2
1 1 0 0 0	35A3
0 0 1 0 0	Unused
1 0 1 0 0	Unused
0 1 1 0 0	35A4
1 1 1 0 0	35A5
0 0 0 1 0	Unused
1 0 0 1 0	40B0
0 1 0 1 0	40B2
1 1 0 1 0	40B3
0 0 1 1 0	Unused
1 0 1 1 0	Unused
0 1 1 1 0	40B4
1 1 1 1 0	40B5
0 0 0 0 1	Unused
1 0 0 0 1	35A1
0 1 0 0 1	37AB12
1 1 0 0 1	37AB13
0 0 1 0 0	Unused
1 0 1 0 1	Unused
0 1 1 0 1	37AB14
1 1 1 0 1	37AB15
0 0 0 1 1	Unused
1 0 0 1 1	40B1
0 1 0 1 1	37AB16
1 1 0 1 1	37AB17
0 0 1 1 1	Unused
1 0 1 1 1	Unused
0 1 1 1 1	37AB18
1 1 1 1 1	37AB19

The nine conductors 56–100XX through 56–XXX11 are energized by two or three input AND gates. The last five numerals and X's of each designation indicate to which of the five stages the AND gates are connected and which counts stored in these stages energize the conductor. For example, conductor 56–010XX is negative in potential only when the first three stages contatin a binary 010. Conductor 56–XXX10 is negative in potential only when the last two stages contain the binary number 10. These nine conductors are connected via cable **5612** to FIGS. 49–51 where they are connected to the two leftmost diodes in the 20 gates **49A0–51B5**.

An example will illustrate the enabling of the gates under the control of counter **5600**. Referring to the table above when the binary number 00000 is stored in the counter none of the 20 gates should be enabled. Referring to FIG. 56, with this number stored in the counter only conductor 56–XXX00 is negative in potential. As each of the gates **49A0–51B5** has its two diodes analogous to diodes **4923** and **4924** connected to two different ones of conductors 56–100XX through 56–XXX11, it is apparent that at least one of these diodes in each gate is forward biased. As a consequence, none of the gates is enabled. With the binary number 10000 stored in the counter conductors 56–100XX and 56–XXX00 are both negative in potential. The two diodes **4623** and **4624** in gate **49A0** are connected to these two conductors. As both diodes are reverse biased the gate is enabled and

trunk 35A0 is scanned in the particular concentrator whose identity is stored in counter 5601. If a tone appears on conductor 49SA0 it is transmitted to both of conductors 4925 and 4926, the tone on these two conductors being in phase with each other.

The tone originates in oscillator 5108. It is transmitted along conductors 5160 and 5161 to diodes 4882 and 4886. Transistor 48TRS is normally conducting in a quiescent condition. During any sequence other than trunk scanning conductor 57R0 is positive in potential. This potential is coupled through resistor 4883 to the anodes of diodes 4889 and 4887. With these diodes forward biased, diodes 4882 and 4886 are reverse biased and the tone does not pass through these diodes. However, during trunk scanning conductor 57R0 is negative in potential and diodes 4887 and 4889 are reverse biased. At this time, negative source 4896 forward biases both of diodes 4882 and 4886. The 18 kc. tone on conductor 5160 is now transmitted through diode 4882 and causes transistor 48TRS to follow the 18 kc. oscillations. The tone is thus transmitted over conductor 48RS to each of the eight central office units.

It is transmitted via cable 4828 to FIG. 4. With transistor 44CR conducting diode 4411 is forward biased and the tone is transmitted through this diode and capacitor 4409 to conductor 44RS'. The tone is thus transmitted to conductor 44RS' only if the trunk being scanned is contained in central office unit 0. If the trunk being scanned is in one of the other seven units the collector of transistor 44CR is more negative in potential, diode 4411 is reverse biased, and the tone is not transmitted to conductor 44RS'. Thus transistor 44CR not only insures that a signal is not transmitted through diodes 4404 connected to the trunk sleeves if the trunk being scanned is not contained in central office unit 0, but as further protection prevents the tone from being applied to the trunks in this unit in the first place.

If the subscriber at the field unit has hung up his receiver the tip of the line becomes more positive in potential as no current flows through his subset. The central office detects this condition in the ordinary manner as the subscriber's tip and ring conductors are connected directly to the tip and ring conductors of the line circuit in the central office. The central office thus treats the signal as a termination request and causes a negative potential to be applied to the sleeve of the line equipment. Referring to line switch A it is seen that although the central office applies a negative potential to the sleeve, the cross points in the line switch have not yet opened as the particular line switch hold magnet utilized in the connection is still operated. As a result, the negative potential applied to the sleeve is extended through the line switch crosspoints and the sleeve of the line switch link employed in the connection to one of conductors 33S0–33S19. Each of the sleeve leads 33S0–33S19 is connected via cable 3302, a resistor 4122 and a resistor 4103 to a respective one of diodes 4107. The only ones of these diodes that will be forward biased at this time are those connected to the sleeves of links connected to the sleeves of line circuits that were previously grounded but are now negative in potential. The tone on conductor 41RS' is transmitted through each of these forward biased diodes 4107 to respective conductors 41M–0 through 41M–19. Those of diodes 4107 connected through resistors 4103 and 4122 to respective conductors 33S0–33S19 which are grounded indicating the links are in use, are reverse biased and the tone is not transmitted to the respective ones of conductors 41M–0 through 41M–19. Any link that is presently being used has applied to its sleeve a positive potential by the central office line circuit which is extended through the crosspoints of the line switch. Thus the tone is not applied to those of conductors 41M–0 through 41M–19 associated with links presently in use. However, those links priorly in use but now requiring release and those links which were not priorly in use have applied to their sleeves respectively a negative potential or no potential at all. The latter condition arises as the respective crosspoints are open. In either event the diodes 4107 associated with these links are not reverse biased and the tone on conductor 41RS' is transmitted to the associated conductors 41M–0 through 41M–19.

One other possibility should be noted. If a regular connection has been set up through the concentrator as a result of a telephone being off-hook, central office 3001 may not yet have handled the call. In this case negative potential 3002 will still be on the particular line sleeve involved. This negative potential however will not cause a regular release. The off-hook condition will result in enough of the sleeve potential being drained off through the particular diode 4101 involved so that the associated diode 4107 can not be forward biased. The diode 4101 conducts because the ring is less negative than it is when the receiver is on-hook.

Although the tone is thus on conductors 41M–0 through 41M–19 associated with links priorly in use but now requiring release, and links not previously used at all, the tone is transmitted to only those of respective conductors 36S0–36S19 associated with links priorly in use. These links have their line switch hold magnets still operated. The operated line switch hold magnets have their contacts 41LHA0–2 through 41LHA19–2 closed, and the tone on conductors 41M–0 through 41M–19 is transmitted through these closed contacts to respective conductors 36S0–36S19. However, those links not priorly in use have their respective contacts 41LHA0–2 through 41LHA19–2 open, and the tone is not transmitted to respective conductors 36S0–36S19. Thus the tone on conductor 41RS' appears on only those of conductors 36S0–36S19 associated with links priorly in use and which are still connected through the line switch to central office line circuits but now require release.

The tone on conductor 44RS' is extended to conductor 41RS' in the hold magnet circuit for line switch A and also to conductor 39RS' in the hold magnet circuit for line switch B. The tone thus also appears on those of conductors 39S0–39S19 connected to links which must now be released.

The link sleeves of trunk switch A, 36S0–36S19, are connected through the crosspoints of this trunk switch and cable 3501 to FIG. 44. The tone is transmitted through capacitors 4403 and thus appears at the anodes of the respective ones of diodes 4404. Similar remarks apply to the tone transmitted through the sleeve connections in trunk switch B to respective ones of the analogous diodes. Although the tone thus appears on the sleeves of all of the trunk links which must be released, the tone is transmitted to conductors 4925 and 4926 through only that one of gates 49A0–51B5 associated with the trunk whose identity is stored in counter 5600 and which is contained in the unit whose identity is stored in counter 5601. Any link which must now be released is still connected to a trunk which similarly must be released. The tone on all of the links to be released therefore appears on the sleeves of all trunks which must be released. The tone appears on conductors 4925 and 4926 only if it is applied to the sleeve of the particular one of the 160 trunks being scanned at the moment.

The in-phase signals on conductors 4925 and 4926 are applied respectively to the bases of transistors 48TR and 48RR. These transistors amplify the signals and apply them to the bases of respective transistors 48TR1 and 48RR1. These transistors similarly amplify the signals and apply them to the bases of transistors 48TR2 and 48RR2. These two latter transistors similarly amplify the signals, and in addition comprise a low impedance source. Transistor 48ROTM is normally reverse biased by the positive potential on conductor 57R0 which is connected through diode 4861 to the base of this transistor. However, during trunk scanning this con-

ductor is negative in potential and transistor **48ROTM** is not inhibited. As the emitters of transistors **48TR2** and **48RR2** become negative in potential as a result of the oscillating signal, this potential is applied through diodes **4847** and **4804**, and resistor **4849** to the base of transistor **48ROTM**. The negative potential causes transistor **48ROTM** to conduct. This transistor would normally follow the 18 kc. oscillations, and turn off for half of each cycle. However, when transistors **48RR2** and **48TR2** conduct for one-half of each cycle, capacitor **4870** charges. The discharge of this capacitor during the other half of each cycle maintains transistor **48ROTM** conducting. Transistor **48OTM1** is normally on but turns off when transistor **48ROTM** conducts. Thus transistor **480TM1** is continuously off. Transistor **480TM2** is normally off. In the quiescent state transistor **480TM1** is conducting and current flows through diode **4869**, and resistors **4873** and **4874** to ground. The positive potential across resistor **4874** reverse biases the emitter-base junction of transistor **480TM2** which thus remains off. However, when transistor **480TM1** turns off, negative source **4870** causes the emitter-base junction of transsistor **480TM2** to be forward biased and thus the transistor conducts. Transistor **480TM2** conducts however only after the tone has been received for 750 microseconds. Capacitor **4871** must first charge from source **4870** after transistor **480TM1** is turned off. This 750 microsecond delay is provided to insure that a continuous tone is being received rather than some spurious signal. After 750 microseconds transistor **480TM2** remains continuously on provided the 18 kc. tone is not interrupted which it will not be if the trunk being scanned indeed requires release and the initial signal on conductor **4925** and **4926** did not arise from a spurious source whose duration was greater than 750 microseconds.

Transistor **480TM3** is normally on and a potential more positive than that of source **4879** is applied to conductor **630TM3**. This positive potential is connected to the 0 outputs of each of the four stages 63–1 through 63–4 of counter **6300**. Thus in the quiescent condition the binary number 0000 is maintained in this counter. However, whenever transistor **480TM2** conducts transistor **480TM3** turns off, and the positive inhibiting potential on conductor **630TM3** is removed.

The negative potential now on conductor **630TM3** is also applied to the anode of diode **6540**. The more positive potential on this conductor was previously transmitted through this diode and resistor **6537** to forward bias diode **6541**. With diode **6540** reverse biased however, negative source **6539** causes diode **6541** to be reverse biased. As a result, the pulses from the astable multivibrator are no longer transmitted through this diode to conductor **65P1** to advance counter **5600**. Although the astable multivibrator continues to switch state, counter **5600** does not advance and the priorly energized gate of gates **49A0–51B5** remains energized. The 18 kc. tone thus continues to be transmitted through the sleeve of the trunk being scanned, and transistor **480TM3** remains off continuously thereby continuously reverse biasing diode **6541** and enabling counter **6300**.

The astable multivibrator continues to create pulses to cause the scanning of lines. Whenever flip-flop **61A/B** changes from its 1 state to its 0 state a pulse is obtained on conductor 61–0. This conductor is connected via cable **6113** to conductor **6390** which is in turn connected to the input of counter **6300**. Thus each time flip-flop **61A/B** changes to its 0 state the count in counter **6300** advances. When counter stage 63–2 changes from 0 to 1 state a positive potential is applied to conductor **6391**. This potential is transmitted through diode **6308** to the base of transistor **63T0** of the release flip-flop comprising transistors **63T0** and **63T1**. The positive potential on conductor **57R0** before trunk scanning begins is transmitted through resistor **6313**, diode **6310**, and resistor **6304** to the base of transistor **63T1** to cause this transistor to remain off and transistor **63T0** to remain on. During trunk scanning diode **6310** is reverse biased and transistor **63T1** is no longer held off by the potential on conductor **57R0**. This transistor remains off however as the flip-flop was originally set in this state by the positive potential on conductor **57R0**. The positive potential now applied by counter stages 63–2 to the base of transistor **63T0** turns this transistor off and transistor **63T1** on. Current flows from the collector of transistor **63T1** through the winding of relay **63R** to negative source **6344**. Relay **63R** operates indicating that the trunk whose identity is stored in counter **5600** and which is contained in the central office unit whose identity is stored in counter **5601** must be released.

It is thus seen that relay **63R** does not operate immediately upon the detection of the 18 kc. tone on the scanned trunk. Instead, it is only after the tone is received for a time interval during which flip-flop **61A/B** changes to the **0** state twice that relay **63R** operates. In the event that the tone is interrupted transistor **480TM3** turns on and the more positive potential is once again applied to conductor **630TM3**. This immediately resets counter **6300** thereby insuring that relay **63R** does not operate. Diode **6541** is now forward biased once again and the next pulse from the astable multivibrator enables another one of gates **49A0–51B5**. The trunk release sequence is thus not initiated unless the 18 kc. tone is received for a sufficient time interval. This insures that spurious signals do not trigger the circuitry for releasing a trunk. A continuous tone for a pre-determined minimum time interval is required to initiate the sequence to release a trunk.

It should be noted that counter stages 63–3 and 63–4 are not utilized in the scanning sequence for trunk releases. These two additional stages are utilized in the scanning sequence for local connections. Similarly, transistor **48LOTM** has no effect on the circuit at this time. Although diodes **4805** and **4850** conduct in the same manner as diodes **4804** and **4847**, capacitor **4801** is smaller in magnitude than capacitor **4870** and cannot maintain transistor **48LOTM** conducting during alternate half cycles. Transistor **48LOTM** follows the 18 kc. tone and is thus incapable of maintaining transistor **480TM1** continuously non-conducting. Transistor **48LOTM** is utilized in the scanning sequence for local connections to be described below.

When transistor **63T1** turns on it is necessary to inhibit further operation of the astable multivibrator. As it is now definitely established that a trunk is to be released, further line scanning must be inhibited. The positive potential at the collector of transistor **63T1** is transmitted through diode **6312** to conductor **6302**. This positive potential is further transmitted through conductor **6251** to the anode of diode **6518**. As in the line scanning sequence a positive potential on this conductor maintains the astable multivibrator in the 0 state with transistor **65T0** conducting for the duration of the switching sequence.

The positive potential at the collector of transistor **63T1** is transmitted through diode **6316** and resistor **6334** to the base of transistor **63TSC** which turns on. A negative potential is now applied to conductor **63SC** which is extended to FIG. 46. This negative potential is extended to each of the eight central office units. It is necessary to switch the service action bistable circuit in the particular unit requiring the trunk release. This particular unit has a negative potential on its respective one of conductors **57C0–57C7**, the other seven units having positive potentials on their respective conductors. On FIG. 46 it is seen that if a positive potential appears on conductor **57C0**, diode **4631** is forward biased and diode **4629** is reverse biased. The negative potential on conductor **63SC** is thus not transmitted through this diode to the base of transistor **46T1**. On the other hand, if conductor **57C0** is negative in potential, diode **4631** is reverse biased,

and as a consequence the negative potential on conductor 63SC is transmitted through diode 4629 to turn transistor 46T1 on. Thus, in the unit requiring the trunk release the service action bistable multivibrator is switched on. Again, one of the eight relays 46IA0–46IA7 operates and further insures that the other seven service action bistable multivibrators remain off.

The more positive potential on conductor 46SF due to the conduction of transistor 46T1 is transmitted to FIG. 48 to ocnductor 4892. This potential turns off transistor 480TM2. Conductor 630TM3 becomes negative in potential once again. Although counter 6300 resets, transistor 63T1 continues to conduct as the release flip-flop has already been triggered from the pulse on conductor 6391. And although the negative potential on conductor 630TM3 that was previously inhibiting pulses from the astable multivibrator from advancing counter 5600 is now removed, the counter does not advance as the astable multivibrator is held by the positive potential on conductor 6251.

Diode 6393 is forward biased when transistor 63T1 conducts and holds transistor 63T3 off. This insures that the local flip-flop, which initiates a local connection sequence, is not erroneously triggered.

As in the regular and local connection sequences, when transistor 46T1 turns on transistor 46FA goes active and causes a simplex pulse to be sent to the field unit over the first control path. Although this simplex pulse is transmitted at the beginning of a regular release and a local connection sequence it has no effect on the field unit. The simplex pulse sent to the field only holds counter 2400. It is the potentials on the conductors of the second control pair that initiates a switching sequence at the field.

Transistor 63L0, as described above, is normally turned on by the potential put on conductor 46SF by the now operated transistor 46T1. The negative potential at the collector of transistor 63TSC is transmitted through diode 6335 and resistor 6330 to the base of transistor 63L0 to keep this transistor off. As a result, transistor 63L0 does not turn on the transistor 65TA or 65TB. One of relays 65A and 65B operates only when the sequence to be performed is a regular connection in one of the two pair of switches. For a trunk release, relay 63R operates, and relays 65A and 65B must remain unenergized.

As in a regular connection sequence, ground potential is applied to conductor 60SP, now as a result of contacts 63R–8 on FIG. 60 closing. This ground potential again further insures that the astable circuit is held for the duration of the switching sequence. A ground potential is also applied to conductor 52SM when contacts 63R–11 close. This ground potential is transmitted through contacts 46IA0–7 on FIG. 43 to operate relays 43TK and 43SM if the trunk to be released is in unit 0. Again the equivalent two relays do not operate in the other seven units as the contacts analogous to contacts 46IA0–7 in these other units are not closed.

Relay 63R also causes contacts 63R–5 on FIG. 54 to close and start the timing circuit. If the regular release is not completed within the predetermined one second time limit, relay 54TM operates and the circuit resumes scanning.

The field unit is not yet notified of the service action. The field is notified only after the identification relays in the common control have operated. With the operation of relay 63R, contacts 63R–7 on FIG. 60 close. As contacts 60LB1–1 are closed at this time relay 60LR operates. Referring to FIG. 56 it is seen that the normally closed contacts identified by the bracket designated 60LR– connect five stages of counter 6100 to respective transistors 64T1–64T4 and 64T6. With relay 60LR operated however, each of the two conductors connected to one of the stages of counter 6100 is now connected to an output of one of the five stages of counter 5600. As relay 60LB1 is still unoperated and the normally closed contacts identified by the bracket designated 60LB1– on FIG. 57 are still closed it is seen that the five transistors 64T1–64T4 and 64T6, and the five relays 64G1–64LS2 and 64LS4, are now controlled by counter 5600 rather than counter 6100. Counter 5600 contains a trunk identity and the transistors and relays on FIG. 64 are now controlled by this counter whose count identifies the trunk to be released.

Although all six relays on FIG. 64 are required to identify a particular line only five are required to identify a particular trunk. Sixty-four lines require six binary bits to identify them. Twenty trunks however require only five binary bits. Transistor 64T5 and relay 64LS3 are not connected to a stage of counter 5600. Transistor 64T5 and relay 64LS3 are still connected to stage 61HOR3 of counter 6100. Although relay 64LS3 may operate depending upon the state of this stage, no contacts on this relay are contained in the translating tree for energizing two of identifying conductors 64ID1–64ID8. As a consequence, the operation of this relay, if it occurs, has no effect on the selection of the two identification relays in the trunk release sequence.

Contacts 60LR–1 on FIG. 64 close when relay 60LR operates. As contacts 60LB1–2 are closed, negative source 6432 is connected through resistors 6402–6407 to the base of each of transistors 64T1–64T6. This is similar to the connection of source 6414 to these transistors when contacts 65A–11 or 64B–11 close. The transistors now operate under control of their respective counter stages in a manner similar to their operation during a regular connection sequence. Only when all of the relays 64G1–64LS4, which should operate, have operated is the positive potential on conductor 6430 removed and transistor 53T no longer inhibited. Contacts 63R–4 on FIG. 53 close when relay 63R operates and connect negative source 5310 through resistor 5312 to the base of transistor 53T. As in the regular connection sequence a negative potential applied through resistor 5312 to the base of transistor 53T is insufficient to operate this transistor as long as a positive potential appears on conductor 6430. It is only after all of the required relays 64G1–64LS4 have operated that the positive potential is removed from conductor 6430 and transistor 53T conducts. At this time relay 530ID operates.

With this relay operated contacts 530ID–2 and 530ID–3 on FIG. 59 close. Contacts 63R–2 and 63R–3 are closed at this time and ground potential is applied to conductors 59IDG and 59IDG′. These two conductors are extended to FIG. 64 where they are connected through a translating tree to the eight conductors 64ID1–64ID8. Two of these eight conductors are connected respectively to conductors 59IDG and 59IDG′ depending upon the energization states of the five relays 64G1–64LS2 and 64LS4. The eight conductors 64ID1–64ID8 are connected respectively to conductors 59ID1–59ID8 and at this time two of identification relays 58ID1–58ID8 operate. The two operated identification relays identify the particular trunk to be released, the trunk identity originally appearing in counter 5600. With two of the identification relays operated, relay 58C operates as in the regular connection sequence.

It is only after relay 58C operates and contacts 58C–5 on FIG. 54 close that the field is notified of the service action. In a regular connection sequence it will be recalled that a negative potential is applied to either the tip or ring of the second control pair to operate either relay 25A or 25B in the field unit depending upon which switch contains the line requesting service. A lesser negative potential is applied to the other of these two conductors and when relay 25AUX in the field unit operates and opens the conducting path in this other conductor, relay 54TR in the common control operates indicating that the field has recognized the common control command. In the trunk release sequence the common control causes a positive potential to be applied to the

tip of control pair 2 to alert the field. The circuitry for accomplishing this result is similar to that just summarized for the regular connection sequence. A greater positive potential is applied to the tip of the second control pair than is applied to the ring. As a result, only relay **25R** in the field unit operates, relay **25L** remaining unoperated. When relay **25AUX** in the field operates and opens the conducting path in the ring of the second control pair relay **54TR** in the common control operates.

Conductor **5810** is positive in potential being connected through resistor **5802** to positive source **5803**. This potential is extended on FIG. 54 through now closed contacts **58C–5** and **63R–13**, diode **5412**, conductor **54TR'**, contacts **46IA0–5**, resistor **4692**, conductor **54TR2**, resistor **5410**, the top winding of relay **54TR**, diode **5414**, conductor **54TRR**, contacts **46IA0–14**, and contacts **46TR1–4** to the ring of control pair 2. Although current now flows through the top winding of relay **54TR** this relay does not operate. Contacts **58C–9** are closed at this time and current flows from negative source **5430** through these contacts, the lower winding of relay **54TR**, resistor **5411**, conductor **54TRS** and contacts **46IA0–6** to ground. The two currents through the respective windings of relay **54TR** apply opposing magneto-motive forces to this relay which remains unoperated.

The positive potential applied to the tip of control pair 2 is greater in magnitude than the positive potential applied to the ring of this pair. The positive potential on conductor **5810** is connected directly through contacts **58C–5** and **63R–13** to conductor **54TRT** which is connected through contacts **46IA0–13** and **46TR1–3** to the tip of control pair 2. The positive potential applied to the ring is smaller in magnitude because current flowing in the ring conductor is reduced due to the resistance of resistors **4692**, **5410** and the top winding of relay **54TR**. Consequently, the greater current in the tip of control pair 2 causes relay **24R** in the field unit to operate while the lesser current in the ring is insufficient to operate relay **25L**. Relay **25R** in the field when operated causes relay **25R1** to operate which in turn operates relay **25AUX**. Contacts **25AUX–8** open and current ceases to flow in the ring of control pair 2. Current in the top winding of relay **54TR** thus no longer flows and as only the bottom winding is energized the relay now operates. As in a regular connection sequence the operation of relay **54TR** causes relay **46TR1** in the central office unit to operate when contacts **54TR–1** on FIG. 54 close. Contacts **46TR1–6** through **46TR1–9** close and contacts **46TR1–1** through **46TR1–4** open thereby connecting the four control conductors to conductors **54T1'–54R2'**. These four conductors are connected via cables **5434**, **5436**, and **5432**, and **5808** to FIG. 58 where they are connected to respective conductors **58T1'–58R2'**. As in a regular connection, positive and negative potentials are applied to two of these four conductors in accordance with the operation of two of relays **58ID1–58ID8**. In this manner the field unit is notified over two of the four control conductors of the identity of the trunk to be released. The field unit then causes the release of this trunk as described above.

The operation of relay **58C** thus causes the field to be notified of the service action and in addition of the particular trunk identity. Relay **58C** also controls the release of the trunk at the central office unit. Contacts **58C–2** on FIG. 60 are now closed and negative source **6006** is now connected through contacts **63R–9**, the top winding of relay **60CK**, and contacts **58C–2** to conductor **6020**. Conductor **6020** is connected through contacts **60LA–9** to conductor **54TS** which is connected through the translating tree of FIG. 52 to one of conductors **52TSA0–52TSAB19**. The particular one of these 20 conductors which is selected depends upon the trunk identity stored in relays **58ID1–58ID8**. The negative potential on the selected one of these 20 conductors is extended through cables **5220** and **5380** to FIG. 44. This negative potential is extended through respective contacts **43TK–1** through **43TK–20** to the sleeve of the particular trunk to be released. It will be recalled that the holding current path for the two hold magnets extends from negative source **4108** or the equivalent source on FIG. 39, through the windings of both hold magnets, and the sleeve crosspoints in the trunk switch to the sleeve conductors on FIG. 44, and through a respective one of resistors **4402** to ground. With a negative potential now being applied to the sleeve conductor on FIG. 44 current no longer flows through the two hold magnet windings as no potential difference appears across them. As a consequence, the line and trunk switch hold magnets release. Once released these hold magnets remain unenergized as the switch crosspoints have opened.

One source of negative potential for releasing the two hold magnets is potential source **6006**. Contacts **63R–10** are closed and the potential of negative source **6019** also aids the release operation. This source is less in magnitude than source **6006** and a potential difference appears across the winding of relay **60CK** which thus operates. Source **6019** reduces the value of this potential difference. The top winding of relay **60CK** has a small resistance and could be damaged by excessive current through it. By reducing the potential difference across the winding, source **6019** insures that the winding is undamaged.

Current flowing at this time from source **6006** through the top winding of relay **60CK** causes this relay to operate. Contacts **60CK–1** on FIG. 53 close. Ground potential is extended through these contacts, contacts **60LA–3**, and conductor **53CK1** to contacts **60CK1–B1**. Relay **60CK1** operates and locks through contacts **60CK1–M1**, and contacts **58C–4** and **54TR–2** to ground. With relay **60CK1** operated contacts **60CK1–6** on FIG. 62 are closed. As with a regular connection when the field unit has completed its operation a negative potential is applied to the unused conductor of control pair 2. This potential is extended through contacts on relays **58ID1–58ID8** to conductor **58SK**. This negative potential is further transmitted through conductor **62SK** and contacts **60CK1–6** to the reset bistable multivibrator which as in a regular connection sequence switches to the 1 state. An increased potential now appears at the collector of transistor **62T1** which is connected through diode **6311** and resistor **6304** to the base of transistor **63T1** in the release bistable multivibrator. This multivibrator switches state and relay **63R** releases. In addition, the reset multivibrator restores the entire circuit as in a regular connection sequence. During the release of the various relays in the resetting operation, voltages are induced throughout the circuit. To insure that an erroneous trunk release indication is not obtained, the more positive potential on the collector of transistor **62T1** is transmitted through conductor **6293** to hold transistor **480TM2** off.

When relay **60CK1** releases, again a positive pulse is applied to conductor **62TS** which is transmitted through capacitor **6242**, diode **6229** and resistor **6230** to the base of transistor **62T5**. The monostable multivibrator is switched to its unstable state. This causes counter **6100** to reset to zero. After 125 milliseconds scanning resumes. It should be noted that as counter **6100** is reset line scanning resumes with the first line in the next group. Trunk scanning however continues with the next trunk in the scanning sequence. No reset circuitry is provided to reset counter **5600**, and therefore when conductor **65P1** is pulsed upon the next operation of the astable multivibrator the count of this counter advances and the next trunk in sequence is scanned.

F. *Local connection—detailed description of central office unit and common control operations*

When a subscriber served by one of the field units wishes to call another subscriber served by the same unit he places the call in the ordinary manner, and the concentra-

tor functions to establish a connection to the central office in the manner described above. The central office, after receiving the called number, applies a ground potential to the sleeve of the called number's line circuit. This results in a call being offered to the concentrator and again the connection is established in the normal manner. This type of connection is the type that is to be switched to a "local connection." The local connection is a connection made between these two subscribers at the field unit and at the respective central office unit thereby permitting the release of the two regular trunks for use by the other subscribers served by the concentrator.

In the trunk scanning sequence, as described above, the 18 kc. tone is applied to the sleeves of all trunks requiring release. When a particular trunk is scanned and the tone on the sleeve is detected, the common control initiates the trunk release sequence. In the local connection scanning sequence the same tone is applied to the tip and ring of a particular one of the twenty trunks in any one of the central office units. The tip and ring conductors of the other 19 trunks in the same unit are scanned for this tone. If two trunks are connected to each other by the central office switching equipment, the tone applied to the tip and ring of one will appear on the tip and ring of the other. When this tone is detected a local connection switching sequence is begun. In the event that the tone is not detected on the 19 trunks when it is being applied to the one selected trunk in this central office unit, tone is applied to another one of the 20 trunks and a new set of 19 trunks is scanned for the tone. This process continues with the tone being applied to each of the 20 trunks in turn. For each application of the tone to one of the trunks the other 19 are scanned for its appearance. This same scanning procedure takes place for each of the eight units, but like trunk scanning, is not performed simultaneously in all eight units.

Scanning for trunk releases is not performed simultaneously with the scanning for local connections. These two types of scanning sequences are interspersed with each other. Line scanning however proceeds simultaneously with whichever one of these scanning sequences is being performed. Before proceeding to analyze the local connection scanning sequence it will be of aid to describe the manner in which the various counters control the interspersed trunk release and local connecting scanning sequences.

As described above, the five stages of counter **5600** control trunk scanning only when stages **57TKT1** and **57TKT2** are both in the 0 state. Counter **5601** determines the particular one of the eight units in which the scanning is performed. When stages **57TKT1** and **57TKT2** are not both in the 0 state however, AND gate **5715** is unenergized and a positive potential is applied to conductor **57R0**. This positive potential inhibits those circuits described above as being enabled by a negative potential on conductor **57R0**. Thus trunk release scanning is not performed. For example, the positive potential on conductor **57R0** reverse biases diode **4882** and the 18 kc. tone is not even applied through transistor **48TRS** to the trunk sleeves. When counter stages **57TKT1** and **57TKT2** are in any one of the three states other than 00, namely 01, 10, and 11, local connection scanning results. Counter **5601** again determines in which unit the scanning proceeds. The five stages of counter **5700** determine the particular one of the 20 trunks to which the tone is applied. The five stages of counter **5600**, as in trunk scanning for regular releases, determine which of the trunks is scanned for the detection of the tone. Each of the stages in counter **5700** has in its designation the letters TKT. This is to indicate that counter **5700** controls the trunk on which the tone is transmitted. Each of the stages in counter **5600** has in its designation the letters TKR as counter **5600** determines which trunk is scanned at a particular time for the receipt of the tone. In trunk scanning for regular releases only counters **5600** and **5601** are required, as the tone is applied to the sleeves of all trunks requiring release, and it is only necessary to determine which trunk is scanned at a particular time, and in which concentrator unit the scanning is to be performed. In the local connection scanning sequence however, as all combinations of two trunks in each unit must be scanned it is also necessary for the common control to apply the tone to a particular one of the 20 trunks and to detect its possible appearance on a particular one of the other 19 trunks in any unit. For this reason counter **5700** is employed in the local connection scanning sequence to determine on which one of the 20 trunks the tone is applied. Again, counter **5601** determines the particular unit in which the scanning is performed.

In the preceding section it was described how the common control scans the sleeves of the trunks under the control of counters **5600** and **5601**. In the local connection scanning sequence these same stages control the scanning of the tip and ring of each trunk for the receipt of the tone. The tone receiving sequence is identical to that described in the preceding section. Counter **5700** determines the particular trunk on which the tone is applied. Although counter **5700** identifies one of 20 trunks, this trunk can be in any one of the eight units. Counter **5601** again determines the particular unit in which the scanning takes place. The table below indicates on which trunk the tone is transmitted for each of the 32 counts stored in counter **5700**. Again, all of the 32 counts in each cycle are not needed as each unit contains only 20 trunks. As counter **5700** cycles through its 32 counts the first two stages both contain binary 0's eight times. When both of these stages contain binary 0's trunk scanning for regular releases is performed. Assume that the last pulse has just switched all counter stages to the 0 condition. This pulse, together with the next 31, cycle counter **5600**, and the 20 trunks in the first unit, identified by the 000 count in counter **5601**, are scanned for regular releases. The next pulse resets counter **5600** and advances counter **5601**. Unit 1 is now identified by counter **5601** and the last pulse along with the next 31 control the scanning of the 20 trunks in this unit for regular releases. The next six groups of 32 pulses each cause the other six units to be scanned for regular trunk releases. In all, 8 x 32 or 256 pulses cause all 160 trunks to be scanned for regular releases when the first two stages of counter **5600** are in their 0 states. After 256 pulses counter **5601** has completed its cycle and the next pulse resets it to 000. Stage **57TKT1** is now pulsed and a 1 appears in this stage. Under these circumstances local connection scanning takes place. The 10000 count in counter **5700** identifies a particular trunk on which the tone is transmitted. The next 32 pulses cycle counter **5600** to sequentially scan the other 19 trunks in the unit identified by the count in counter **5601** for the appearance of the tone. After these 32 pulses counter **5601** advances and identifies another unit. The tone is now applied to the same numbered trunk in this new unit, and the next 32 pulses cycle counter **5600** and cause the other 19 trunks in this unit to be scanned for the receipt of the tone. The next six six groups of 32 pulses cause the other 19 trunks in each of the remaining six units to be scanned for the tone appearance. After 256 pulses have been applied, counters **5600** and **5601** reset and counter **5700** is advanced. As 01 is now stored in the first two stages of counter **5700** the local connection sequence continues with the tone now being applied to a new trunk. The next 256 pulses cycle counters **5600** and **5601** to control the scanning of the other 19 trunks in each of the eight units. Counter **5700** is advanced once again and 11 appears in the first two stages. A new trunk is now identified by counter **5700** and the tone is applied to this trunk in the particular concentrator being scanned. The next 256 pulses control the scanning of the other 19 trunks in each of the eight

units sequentially. Thus, after the first 256 x 4 or 1024 pulses, all trunks have been scanned once for regular release, and the tone has been applied to three trunks in each concentrator while the other 19 in each concentrator have been scanned for its appearance. After these 1024 pulses, the first two stages of counter **5700** are once again in the 00 condition, and the next 256 pulses control the scanning for regular releases. This process continues until counter **5700** completes its cycle. The total number of pulses required to complete the cycling of this counter is 256 x 32 or 8192. These pulses cause the first two stages of counter **5700** to be in the 00 condition eight times and thus, each trunk is scanned for regular release eight times while each pair of trunks is scanned once for a possible local connection.

Counter **5700** contains 32 different counts in each cycle. Eight of these control trunk scanning for regular releases. Only 20 are needed to retermine on which trunk the tone is applied in the local connection scanning sequence. Thus, four counts in counter **5700** are unused. It must be borne in mind that each of these four counts being unused implies that the 256 pulses cycling counters **5600** and **5601** during the time this count is stored in counter **5700** do not control any scanning whatsoever. Trunk scanning for regular releases is not performed because the first two stages of counter **5700** are not both in the 0 state and conductor **57R0** is not enabled. Although counter **5600** controls the scanning of the trunks for the detection of the tone, no tone is in fact detected for counter **5700** does not cause the tone to be applied to any trunk in any of the eight units. The following table illustrates the manner in which counter **5700** controls both trunk scanning for regular releases, and the particular trunk to which the tone is applied during the local connection scanning sequence.

Counters 57TKT1-57TKT5	Trunk Having applied To It The 18 kc. Tone
0 0 0 0 0	Scan for regular release
1 0 0 0 0	35A0
0 1 0 0 0	35A2
1 1 0 0 0	35A3
0 0 1 0 0	Scan for regular release
1 0 1 0 0	Unused
0 1 1 0 0	35A4
1 1 1 0 0	35A5
0 0 0 1 0	Scan for regular release
1 0 0 1 0	40B0
0 1 0 1 0	40B2
1 1 0 1 0	40B3
0 0 1 1 0	Scan for regular release
1 0 1 1 0	Unused
0 1 1 1 0	40B4
1 1 1 1 0	40B5
0 0 0 0 1	Scan for regular release
1 0 0 0 1	35A1
0 1 0 0 1	37AB12
1 1 0 0 1	37AB13
0 0 1 0 1	Scan for regular release
1 0 1 0 1	Unused
0 1 1 0 1	37AB14
1 1 1 0 1	37AB15
0 0 0 1 1	Scan for regular release
1 0 0 1 1	40B1
0 1 0 1 1	37AB16
1 1 0 1 1	37AB17
0 0 1 1 1	Scan for regular release
1 0 1 1 1	Unused
0 1 1 1 1	37AB18
1 1 1 1 1	37AB19

It must be remembered that for each of the above counts stored in counter **5700**, 256 pulses cycle counters **5600** and **5601**. Each time the count stored in counter **5700** indicates "Scan for regular release" the 20 trunks in each of the eight units are sequentially scanned for regular releases. The sequence for this trunk scanning is as shown in the previous section. Each time the count in counter **5700** identifies a particular trunk as in the table above, the other 19 trunks in each of the eight units are scanned for the receipt of the tone. The sequence of the trunk scanning for the receipt of the tone, determined by counter **5600**, is the same as described in the previous section as counter **5600** controls trunk scanning for the receipt of the 18 kc. tone during both scanning for regular connection releases and local connections. The only difference, as described below, is that the particular trunk on which the tone is being applied in the local connection scanning sequence (determined by counter **5700**) is not scanned for tone receipt. Only 19 of the 20 trunks are scanned for the tone. This is to insure that a local connection sequence is not initiated to connect a subscriber to himself.

AND gates **5701** are similar to AND gates **5602** and output conductors 57–100XX through 57–XXX11 are energized in a manner similar to the energization of conductors 56–100XX through 56–XXX11. Each of gates **49A0–51B5** comprises two symmetrical halves as far as the network configuration is concerned. The nine conductors 56–100XX through 56–XXX11 control the left half of each of the gates to enable the 18 kc. tone appearing on the trunk sleeve to be transmitted to conductors **4925** and **4926** during the scanning sequence for regular releases. During scanning for regular trunk releases the tone does not appear on the tip and ring conductors of each trunk. However, during scanning for local connections the tone is received over the tip and ring conductors rather than the sleeve. Referring to the gate **49A0**, it is seen that if the left side of the gate is enabled the tone appearing on conductor **49RA0** is transmitted through diodes **4960** and **4901** to conductor **4926**. Similarly, the tone on conductor **49TA0** is transmitted through diodes **4909** and **4905** to conductor **4925**. Thus conductors 56–100XX through 56–XXX11 enable a particular one of gates **49A0–51B5** to receive the tone on the respective trunk tip and ring conductors during local connection scanning in the same manner that they enable the gate to receive the tone on the trunk sleeve during regular release scanning.

The nine conductors 57–100XX through 57–XXX11 are extended via cables **5724** and **5612** to FIGS. 49–51 where they control the sequential enabling of the right sides of gates **49A0–51B5**. The 18 kc. tone from oscillator **5108** is applied to conducotrs **4927** and **4928** which are connected to each of gates **49A0–51B5**. Referring to gate **49A0**, if a positive potential appears on either of conductors 57–100XX or 57–XXX00 one of diodes **4921** or **4922** is forward biased and the positive potential is extended through resistor **4919** and diodes **4912** and **4920**. This positive potential reverse biases all of diodes **4911, 4913, 4917** and **4918** and the tone on conductors **4927** and **4928** is not transmitted through these diodes. However, when both of these conductors are negative in potential due to the energization of their respective AND gates **5701**, both of diodes **4921** and **4922** are reverse biased. At this time negative source **4915** forward biases all four of diodes **4911, 4913, 4917** and **4918**. The tone of conductors **4927** and **4928** is now extended through these diodes to respective conductors **49RA0** and **49TA0**.

During the local connection scanning sequence the right side of one of gates **49A0–51B5** is enabled, and the left side of another one of these gates is similarly enabled. The enabled right side is under control of counter **5700** and the enabled left side is under control of counter **5600**. The tone is transmitted to one pair of conductors **49RA0** and **49TA0** through **51RB5** and **51TB5** depending on which gate has its right side enabled. These two conductors are connected to the trunk to which the tone is being applied. As counter **5600** cycles, the left sides of the other gates are sequentially enabled and the tone if it appears on the tip and ring conductors of the scanned trunk is extended through the left side of the associated gate to conductors **4925** and **4926** to indicate that the two trunks

are connected to each other through the central office switching equipment. Thus during the local connection scanning sequence gates **49A0–51B5** serve to control the transmission of the tone to a trunk and the receipt of the tone from another trunk. The same two conductors associated with each gate are used for both transmitting and receiving the tone, at different times.

Each of gates **49A0–51B5** serves a double function in the local connection scanning sequence. In must be insured that the left side and the right side of the same gate are not both enabled at the same time. For each count stored in counter **5700**, the counter **5600** cycles eight times, and thus in each complete local connection scanning sequence cycle each of gates **49A0–51B5** would normally have both its left and right sides enabled together eight times. The tone on conductors **4927** and **4928** is transmitted to the two conductors connected to the tip and ring of the trunk associated with the gate whose right side is enabled, and were the left side of the gate enabled at the same time the tone would be transmitted directly from the right side of the gate through the left side to conductors **4925** and **4926**, and a local connection switching sequence would be initiated. This must be avoided as the two trunk identities stored in counters **5600** and **5700** are the same. For this reason each of gates **49A0–51B5** is provided with means for inhibiting the operation of the left side of the gate whenever the right side is enabled. Negative source **4915** is greater in magnitude than negative source **4903**. When the right side of the gate is enabled the negative potential from source **4915** is extended through diodes **4911** and **4918** to reverse bias diodes **4960** and **4909**. As diodes **4960** and **4909** do not conduct, the tone on conductors **49RA0** and **49TA0** is not transmitted through the left side of the gate and thus does not appear on conductors **4925** and **4926**. Only if the right side is not enabled can the left side be enabled under the control of counter **5600**. In this manner an erroneous command to initiate a local connection sequence is precluded from appearing on conductors **4925** and **4926**.

It should be noted that the potentials on conductors **4927** and **4928** are out of phase with each other as these conductors are connected to opposite sides of the secondary of transformer **5107**. Thus the tone transmitted to the tip and ring of the trunk whose identity is stored in counter **5700** has opposite phases in the two conductors. If this trunk is connected to another trunk associated with that one of gates **49A0–51B5** whose lift side is enabled, the waveforms in conductors **4925** and **4926** are similarly out of phase with each other. In the regular release scanning sequence, as the tone is received only via the sleeve of the trunk, the two waveforms in conductors **4925** and **4926** are in phase with each other. Although this fact distinguishes the two indications on conductors **4925** and **4926** from each other, that is, the two waveforms are in phase with each other if the trunk whose identity is stored in counter **5600** requires a regular release, and they are out of phase with each other when the two trunks whose identities are stored in counters **5600** and **5700** are connected to each other, this distinguishing feature is not used to identify which of the two switching sequences is to ensue. Rather, the potential on conductor **57R0** determines whether the 18 kc. tone on conductors **4925** and **4926** represents a regular release or a local connection indication. A negative potential on conductor **57R0** causes the tone on conductors **4925** and **4926** to initiate a regular trunk release sequence. If stages **57TKT1** and **57TKT2** are not both in the 0 state the positive potential on conductor **57R0** causes the local connection sequence to be initiated upon the appearance of the tone on conductors **4925** and **4926**.

Before proceeding to the local connection switching sequence it must be understood how the tone transmitted from one of gates **49A0–51B5** is applied to the trunk whose identity is stored in counter **5700** in only that central office unit whose identity is stored in counter **5601**, and in addition, how the tone is received from the trunk whose identity is stored in counter **5600** in only that central office unit whose identity is stored in counter **5601**. The three output conductors **49SA0**, **49RA0**, and **49TA0** in gate **49A0** as well as the analogous output conductors in the other 19 gates are connected via cable **5100** to FIG. 44 in central office unit 0 as well as to the other seven central office units. Depending on which central office is having its trunks scanned for either regular releases or local connections, seven of AND gates **5716** apply positive potentials to their output conductors, and one applies a negative potential to its output conductor. Conductor **57C0** is extended to FIG. 44 and conductors **57C1–57C7** are extended to respective ones of the other seven central office units. A positive potential on conductor **57C0** reverse biases the emitter-base junction of both transistors **44C** and **44CR** as described in the preceding section. With transistor **44CR** off, negative source **4427** reverse biases all of diodes **4404** connected to the sleeve conductors of the twenty trunks in central office unit 0. This prevents these diodes from conducting a signal to that one of gate **49A0–51B5** whose left side is enabled. With transistor **44C** nonconducting negative source **4412** reverse biases those of diodes **4404** connected to the tip and ring conductors in each of the 20 trunks in central office unit 0. As a result no tone can be transmitted to the tip and ring conductors through these diodes from any one of gates **49A0–51B5** whose right side is enabled. Similarly, no signal can be transmitted from the tip and ring conductors in one of these trunks to any one of gates **49A0–51B5** whose left side is enabled. A double protection is afforded. Not only is the tone not transmitted to the trunk whose identity is stored in counter **5700** in a unit not being scanned, but in addition, spurious signals are prevented from being transmitted from the trunk whose identity is stored in counter **5600**.

If conductor **57C0** is negative in potential however, diodes **4420** and **4421** are reverse biased and transistors **44C** and **44CR** are not inhibited from the potential of conductor **57C0**. If the scanning sequence being performed is for regular releases, as described above, conductor **57R0** is negative in potential and transistor **44CR** conducts and transistor **44C** does not. Transistor **44CR** conducting forward biases those of diodes **4404** connected to the sleeves of the trunks to permit the 18 kc. tone on the sleeves of trunks requiring release to be transmitted to gates **49A0–51B5**. As transistor **44C** does not conduct those of diodes **4404** connected to the tip and ring conductors of the trunks are reverse biased and the tone is not transmitted to or from the tip and ring of each trunk.

If the scanning in progress is for local connections rather than regular releases those of diodes **4404** connected to the tip and ring conductors must conduct and those of diodes **4404** connected to the sleeves must not. If the local connection scanning is taking place, conductor **57R0** is positive in potential and diode **4422** conducts. Transistor **44CR** is held off and consequently negative source **4427** reverse biases those of diodes **4404** connected to the sleeve conductors. With transistor **44CR** nonconducting and diode **4420** reverse biased, the negative potential of source **4460** is extended through resistors **4419** and **4415** to the base of transistor **44C**. The magnitude of negative source **4460** is greater than that of negative source **4417** and transistor **44C** conducts. The conduction of this transistor forward biases those of diodes **4404** connected to the tip and ring conductors of the trunks.

In summary, if the scanning is not of the trunks in central office unit 0, conductor **57C0** is positive in potential and inhibits both transistors **44C** and **44CR**. All of diodes **4404** are reverse biased. If the scanning is for regular releases or local connections of trunks in central office unit 0, conductor **57C0** is negative in potential and

has no effect on transistors 44C and 44CR. If the scanning is for regular trunk releases, conductor 57R0 is negative in potential, and transistor 44CR conducts and transistor 44C is inhibited. If the scanning is for local connections, conductor 57R0 is positive in potential, and transistor 44CR is now inhibited while transistor 44C conducts. In the former situation, only sleeves of the trunks conduct signals to gates 49A0–51B5. In the latter situation the tip and ring conductors conduct signals to and from gates 49A0–51B5.

If both local trunks are already in use, as will be described below, both of relays 40K0 and 40K1 are operated. As both local trunks are in use no further local connections can be established, and it is necessary to inhibit the local connection scanning. In such a case, contacts 40K0–8 and 40K1–6 on FIG. 44 are closed and connect ground potential through resistor 4471 to the base of transistor 44C. This transistor remains off and local connection scanning is inhibited.

If a local connection is to be established, out of phase 18 kc. tones appear on conductors 4925 and 4926. Transistors 48RR, 48RR1, 48RR2, 48TR, 48TR1 and 48TR2 operate as they do when in phase signals are applied on conductors 4925 and 4926. However, transistors 48RR2 and 48TR2 are now out of phase with each other. Either of these transistors conducting causes transistor 48LOTM to conduct. Capacitor 4801 is provided to insure that transistor 48LOTM conducts continuously in the event that there is a short interval between the turning off of transistor 48RR2 or 48TR2 and the turning on of the other. During the conduction of either of these two transistors capacitor 4801 charges. If the conducting one of these transistors turns off before the other one turns on, the capacitor discharges through resistors 4800 and 4857 to maintain transistor 48LOTM conducting. It should be noted that transistor 48ROTM does not conduct at this time as the positive potential on conductor 57R0 now inhibits this transistor. Transistor 48LOTM conducting causes transistor 480TM1 to turn off. This transistor and transistors 480TM2 and 480TM3 operate as they do when a regular trunk release signal is received. Transistor 480TM3 turns off and a negative potential is applied to conductor 630TM3. This potential, as in a regular trunk release sequence, enables counter 6300 to now advance whenever flip-flop 61A/B changes to the 0 state. This negative potential similarly prevents the pulsing of conductor 65P1 by the astable multivibrator. Although this multivibrator continues to function and control line scanning, counters 5600, 5601 and 5700 do not advance, and the two enabled ones of gates 49A0–51B5 remain enabled. Provided the tone is not interrupted counter 6300 continues to advance whenever flip-flop A/B changes to its 0 state. Counter 6300 is utilized in the local connection scanning sequence for the same reason it is in the regular trunk release scanning sequence. The tone must appear on the tip and ring conductors for a sufficient time interval to insure that the received signal is not spurious.

Line scanning continues and each time flip-flop 61A/B changes to the 0 state counter 6300 advances. Unlike the trunk release scanning sequence when stage 63–2 changes to the 1 state the release flip-flop does not function to operate relay 63R. As a positive potential now appears on conductor 57R0 diode 6310 is forward biased, and transistor 63T1 is held off. Consequently, the positive pulse on conductor 6391 cannot switch the state of the release flip-flop and relay 63R remains unenergized. However, when stage 63–4 changes to the 1 state a positive potential is applied through diode 6324 to the base of transistor 63T4. Transistors 63T3 and 63T4 comprise the local bistable multivibrator. Transistor 63T3 is normally off. The positive potential on the base of transistor 63T4 now turns this transitsor off and transistor 63T3 on. Current flows from the collector of transistor 63T3 to operate relay 63L.

When transistor 63T3 turns on a more positive potential appears at its collector. This potential is extended through diode 6332 to conductors 6302 and 6251 and holds the astable multivibrator in its 1 state. The same potential on conductor 6302 is extended through resistor 6334 to the base of transistor 63TSC which turns on. The negative potential now appearing on conductor 63SC, as in a regular release sequence, causes transistor 46T1 in the service action bistable multivibrator to turn on if a negative potential now appears on conductor 57C0 indicating that the local connection to be established is for two trunks serving central office unit 0. The service action bistable multivibrators in the other seven units are not operated as conductors 57C1–57C7 are positive at this time. Transistor 63TSC conducting causes transistor 63L0 to remain off, and as in a regular release sequence transistors 65TA and 65TB are prevented from operating.

When transistor 46T1 turns on relay 46IA0 operates. When relay 63L energizes due to the triggering of the local flip-flop, contacts 63L–8 on FIG. 60 close and relay 60LA operates, current flowing from ground through these contacts and the winding of relay 60LA to negative source 6014. Contacts 60LA–2 close, and current flows from ground through these contacts, contacts 60LB1–1 and the winding of relay 60LR to negative source 6090. Relay 60LR operates. Contacts 60LR– on FIG. 56 close and transistors 64T1–64T4 and 64T6 are now connected through the normally closed contacts 60LB1– on FIG. 57 and the now closed contacts 60LR– on FIG. 56 to the five stages of counter 5600. Contacts 60LR–1 on FIG. 64 also close and negative source 6432 is connected through these contacts, contacts 60LB1–2, and respective resistors 6402–6407 to the bases of transistors 64T1–64T6. Relays 64G1–64LS2 and 64LS4 operate, as in the regular release sequence, in accordance with the binary states of the five respective stages of counter 5600.

Contacts 63L–6 on FIG. 53 are now closed and negative source 5310 is connected through these contacts and resistor 5312 to the base of transistor 53T. When all of relays 64G1–64LS4 which should operate have operated, the positive potential on conductor 6430 is removed and at this time transistor 53T and relay 530ID operate. Contacts 530ID–2 and 530ID–3 on FIG. 59 close, and as contacts 63L–4 and 63L–5 are closed at this time ground potential is applied to conductors 59IDG and 59IDG′. The ground potential on these conductors is extended through the lowest relay contact translator on FIG. 64 to two of conductors 64ID1–64ID8. Two of the identification relays operate and identify the trunk on which the tone is being received as these relays operate in accordance with the count stored in counter 5600.

The field unit must be notified that the local connection switching sequence is to take place. The field unit is notified when the positive potentials are applied to the tip and ring of the second control pair with the magnitude of the potential applied to the ring being greater than that applied to the tip. When two of the eight identification relays 58ID1–58ID8 are energized, relay 58C energizes, contacts 58C–5 on FIG. 54 close, and the positive potential on conductor 5810 is now extended through these contacts and now closed contacts 63L–10 to conductor 54TRR. The potential is extended directly from this conductor through contacts 46IA0–14 and 46TR1–4 to the ring of the second control pair. The positive potential on conductor 54 TRR is also extended through diode 5413, conductor 54TR′, contacts 46IA0–5, resistor 4692, conductor 54TR2, resistor 5410, the top winding of relay 54TR, diode 5415, conductor 54TRT, contacts 46IA0–B, and contacts 46TR1–3 to the tip of the second control pair. The positive potential is extended to the field unit and current flows through the top winding of relay 54TR. This relay does not operate however as contacts 58C–9 are now closed and current also flows in the lower winding of relay 54TR.

In the field unit the current flowing in the ring of the second control pair is sufficient to operate relay 25L while the current in the tip is insufficient to operate relay 25R. When relay 25AUX operates and contacts 25AUX–7 open current ceases to flow through the tip conductor. At this time relay 54TR operates to indicate that the field unit has been notified that a local connection sequence is to ensue. When relay 54TR operates, as in the other sequences, relay 46TR1 energizes. As in the previous two switching sequences two of the four control conductors have applied to them positive or negative potentials to notify the field of the first trunk identity.

When the field unit has stored the first trunk identity two of identification relays 23ID–1′ through 23ID–8′ are operated and a negative potential is extended to the central office unit on the unused conductor, or if neither is in use the tip, of the second control pair. As in the two previous sequences this negative potential is extended to conductors 58SK and 62SK.

With the operation of two of relays 58ID1–58ID8 one of conductors 52TSA0–52TSAB19 is connected to conductor 54TS. On FIG. 54 contacts 60LB–12 are closed, and as relay 60LA has operated contacts 60LA–12 are similarly closed. Ground potential is extended through these contacts to conductor 54TS and through the relay contact translator on FIG. 52 to one of conductors 52TSA0 through 52TSAB19. If the trunk to be used is individual to the A switch, relay 58ID1 is operated. Conductor 52TKA connects the winding of relay 53TKA through contacts on relay 58ID1 and contacts 60LB–14 and 63L–9 to ground. Relay 53TKA operates and causes contacts 53TKA–3 through 53TKA–8 on FIG. 53 to close. If the trunk is individual to the B switch, relay 58ID2 is operated and ground potential is extended to relay 53TKB over contacts 63L–9, 60LB–15, contacts on relay 58ID2, and conductor 52TKB. Relay 53TKB operates and contacts 53TKB–3 through 53TKB–8 on FIG. 53 close. If the trunk to be used is one of the eight common trunks, neither of relays 53TKA and 53TKB will be operated because neither of relays 58ID1 nor 58ID2 have operated. The ground potential on one of conductors 52TSA0–52TSAB19 is extended through contacts on relay 53TKA or 53TKB, or directly, to one of the trunk relay circuits 5300–5305, or 5912–5919. As contacts 63L–3, 60LA–5 and 60LB–8 on FIG. 59 are closed negative source 5904 is connected through contacts 53TK0–B through 59TK19–B to one end of the windings of all 14 of trunk relays 0–19. The one of these relays connected to the grounded one of conductors 52TSA0–52TSAB19 operates. It locks over a path including contacts 60LA–10, one of contacts 53TK0–3 through 53TK19–3, and one of contacts 53TK0–M through 53TK19–M. When one of these 14 relays operates and one set of contacts 53TK0–4 through 59TK19–4 closes, ground potential is extended through contacts 60LB–5 and 60LA–13, conductor 53CK1, and contacts 60CK1–B1 to the winding of relay 60CK1 which now operates. The common control thus stores the first trunk identity in one of the trunk relays, and the operation of relay 60CK1 indicates that this storage has been effected.

With relay 60CK1 operated and contacts 60CK1–6 on FIG. 62 closed the negative potential exended from the field unit to the central office unit and appearing on conductor 62SK causes the reset bistable multivibrator to switch state. Transistor 62T1 conducts and the potential at its collector increases. This increased potential is extended through diode 6315 to turn off transistor 63T3. However, transistor 63T4 does not go on at this time as contacts 60LA–7 are closed and connect the base of this transistor through resistor 6346 to ground. Both transistors in the local bistable multivibrator are thus held off. When transistor 63T3 turns off relay 63L releases. Although relay 60LA operated through contacts 63L–8, relay 60LA does not release at this time. When relay 60LA operated contacts 60LA–11 closed and by this time capacitor 6012 has charged sufficiently from source 6013 to maintain relay 60LA operated as it discharges through the relay winding. Relay 60LA is held operated by the discharge of capacitor 6012 but would normally release afterwards as resistor 6090 is large in magnitude and allows insufficient current flow through it to hold relay 60LA operated. However, relay 60LA is held over another path to be described below before capacitor 6012 completes its discharge. Thus relay 60LA remains operated during the entire local connection sequence. With contacts 60LA–1 still closed and contacts 63L–11 now closed relays 60LB and 60LB1 operate. These relays lock over contacts 60LB1–4 and 60LA–2 even after contacts 63L–11 open thereafter. Relay 60LR releases as contacts 60LB1–1 are now open.

When relay 63L releases contacts 63L–4 and 63L–5 on FIG. 59, open, and the ground potential on conductors 59IDG and 59IDG′ which originally operated two of the eight identification relays 58ID1–58ID8 is removed. Consequently, the two previously operated identification relays release. The first trunk identity is still stored however in the operated one of the 14 trunk relays and the operated one of relays 53TKA or 53TKB, if priorly operated, the operated one of these latter two relays being locked over contacts 60LA–10 and either 53TKA–2 or 53TKB–2. Contacts 63L–6 on FIG. 53 are now open, and the ground potential extended through resistor 5311 causes transistor 53T to turn off. Relay 530ID releases. When the two identification relays release relay 58C de-energizes and as contacts 58C–4 are now open relay 60CK1 releases. This relay was priorly locked over contacts 58C–4, 54TR–2 and 60CK1–M1. Relay 54TR releases when contacts 58C–9 open, and thus the locking path for relay 60CK1 is broken. Relay 60CK1 does not reoperate from a ground on conductor 53CK1 as it did before as contacts 60LB–5 are now open.

When relay 60CK1 releases contacts 60CK1–B2 close and a positive pulse is applied to conductor 62TS. This pulse triggers the monostable multivibrator which remains in its unstable state for 125 milliseconds. During this interval although transistor 63TSC is not held on by the conduction of transistor 63T3 it is held on by the ground potential applied through contacts 60LA–15, resistor 6340, diode 6341, and resistor 6334 connected to the base of transistor 63TSC.

The positive potential at the collector of transistor 62T1 is not transmitted along conductor 62RSA to reset the service action flip-flop on FIG. 46, as it is when transistor 62T1 conducts at the end of the regular connection and trunk release sequences. Contacts 60LA–6 and 63L–13 are open and conductor 62RSA is unenergized. It is necessary to maintain transistor 46T1 conducting as the local connection sequence is not yet completed.

After 125 milliseconds the monostable multivibrator on FIG. 62 returns to its stable state, and the reset bistable multivibrator on FIG. 52 returns to its normal condition with transistor 62T0 conducting. Transistor 62T1 turns off and no longer inhibits transistor 63T3. This latter transistor now conducts once again and energizes relay 63L. Transistor 63T4 is still held off as contacts 60LA–7 are still closed. Relay 60LA has remained operated during the 125 millisecond period by the discharge of capacitor 6012. When relay 63L operates once again, contacts 63L–8 close and relay 60LA remains operated from the ground extended through these contacts independent of the discharge of capacitor 6012.

When contacts 63L–9 on FIG. 52 close, now that contacts 60LB–13 are closed, ground potential is applied to conductor 52SM, and relays 43TK and 43SM operate.

With relay 60LB1 now operated the normally open contacts on FIG. 57 close, and the normally closed contacts controlled by this relay open. Transistors 64T1–64T4 and 64T6 are now connected to the five stages

of counter **5700** rather than the five stages of counter **5600**. These stages now control the operation of these five transistors to identify the second trunk involved in the local connection and whose identity is stored in counter **5700**. Contacts **60LB1–3** are closed as are contacts **63L–2** and **60LR–2**, and the negative potential of source **6432** causes transistors **64T1–64T4** to operate their respective relays **64G1–64LS2** and **64LS4** in accordance with the count stored in counter **5700**.

Contacts **63L–6** on FIG. 53 close when relay **63L** reoperates, and when the ground potential on conductor **6430** is removed after the required ones of relays **64G1–64LS4** have operated, transistor **53T** turns on once again and relay **530ID** reoperates. Once again contacts **530ID–2** and **530ID–3** on FIG. 59 close and as contacts **63L–4** and **63L–5** are now closed ground potential is applied once again to conductors **59IDG** and **59IDG'**. This ground potential is extended through the relay contact translator on FIG. 64 to two of conductors **64ID1–64ID8**. As a result two of identification relays **58ID1–58ID8** operate to identify the second trunk involved in the local connection.

Relays **58C** operates once again. As contacts **58C–5** and **63L–10** are now closed positive potentials are extended to the field unit over the tip and ring conductors of the second control pair as they were before to reoperate relay **25L** in the field unit. Relay **54TR** does not operate as current flow once again through both of its windings. When relay **25AUX** in the field operates and causes the current in the ring of the second control pair to cease relay **54TR** operates and in turn causes relay **46TR1** to operate. The trunk identity information is now transmitted to the field unit in the normal manner, the field is notified of the second trunk involved in the local connection, and proceeds to establish the local connection.

On FIG. 52 ground potential is now extended through contacts **63L–9** and **60LB–16** to conductor **52HCW**. The ground potential, extended along this conductor to FIG. 46, is further extended through now closed contacts **46TR1–10** to the windings of relays **46HCA** and **46HCB** which now operate.

In order to establish a local connection in the central office unit, trunk switch select magnets **43TSMA7** and **43TSMB7** must operate. In addition, either steering level select magnets **43TSMA8** and **43TSMB8**, or **43TSMA9** and **43TSMB9** must operate. The re-energization of relay **58C** causes the trunk switch select magnets to operate. On FIG. 59 contacts **60LA–14**, **58C–7**, **60CK1–3**, **60LB–6** and **60LB–7** are all closed, and ground potential appears on conductors **59TSM7** and **59TSML**. These conductors are extended via cable **5991** to FIG. 43. The ground potential on conductor **59TSM7** is extended through contacts **46HCA–1** and **43SM–10** to operate trunk switch select magnets **43TSMA7** and **43TSMB7**. Contacts **43SM–10** are closed as relay **43SM** and **43TK** operated when their windings, connected to conductor **52SM**, were connected to ground potential through contacts **60LB–13** and **63L–9** on FIG. 52. The ground potential on conductor **59TSML** operates the same numbered steering level select magnet in each trunk switch. Relay **40K0** will be shown below to be operated whenever the first local trunk, controlled by steering levels 8, is in use. Similar remarks apply to relay **40K1** and the second local trunk. If the first local trunk is not in use the present local trunk connection is made on it. However, if this trunk is in use the second trunk is selected. If the first local trunk is not in use the ground potential on conductor **59TSML** is extended through contacts **46HCB–1**, **40K0–1** and **43SM–8** to operate steering level select magnets **43TSMA8** and **43TSMB8**. If, on the other hand, the first local trunk is already in use contacts **40K0–1** are open while contacts **40K0–2** are closed. If the second local trunk is not also in use the ground potential is extended through contacts **46HCB–1**, **40K0–2**, **40K1–1** and **43SM–9** to operate steering level select magnets **43TSMA9** and **43TSMB9**. When four of the six magnets **43TSMA7–43TSMB9** have operated it will be seen that ground potential is extended through four of contacts **43TSMA7–1** through **43TSMB9–1** to conductor **4320**. Relays **43HMA** and **43HMB** do not operate yet however, as conductor **58HMW** is energized at this time.

It will be recalled that to establish a local connection it is necessary to first release the two trunk switch hold magnets, identified respectively by an operated one of the 14 trunk relays on FIGS. 53 and 59, and the two operated identification relays **58ID1–58ID8**. After the two trunk switch hold magnets have released and the necessary trunk switch select magnets have operated the two trunk switch hold magnets must reoperate to establish the connection.

At the beginning of the local connection sequence there may be numerous hold magnets operated in the two line and trunk switches. Every call in progress has a line and trunk switch hold magnet energized. Each pair of hold magnets involved in a regular connection are held by current flowing from source **4108** through the winding of the line switch magnet, one of conductors **51N–0** through **41N–19**, the winding of the same numbered trunk switch hold magnet, one of conductors **36S0–36S19**, link and trunk sleeves in trunk switch A, and one of resistors **4402** to ground. Similar remarks apply if the trunk is served by line and trunk switches B. The hold magnets maintaining all regular connections other than those maintaining the two connections to now be operated upon, and the hold magnets maintaining a previously established local connection must not be erroneously released during the local connection switching sequence.

Illustrative component value will aid in the understanding of the local connection switching sequence. Negative source **4108** has a magnitude of 50 volts. The impedance of the winding of each line switch hold magnet is 200 ohms as is the impedance of each of the trunk switch hold magnet windings. Each of resistors **4402** is 250 ohms. Thus, during a regular connection the junction of the line and trunk switch hold magnet windings is at approximately −34.6 volts, and the junction of the trunk switch hold magnet winding and one of resistors **4402** is at −19.2 volts. To release the two particular trunk switch hold magnets involved in the local connection, −34.6 volts is applied to the two connected resistors **4402**. The potential difference across the two trunk switch hold magnets is thus zero and they release. The two associated line switch hold magnets, however, must not release. They would normally do so because once the trunk switch hold magnets release and the associated crosspoints open, the hold current paths for the line switch hold magnets are broken. Thus at the same time −34.6 volts is applied to two of resistors **4402** it is necessary that the two line switch hold magnets be held by means other than the current path including the crosspoints controlled by the trunk switch hold magnets to be released. They must be held even though they have not yet been identified by sleeve potentials.

Although not yet thus identified, the two line switch hold magnets whose trunk switch hold magnets will be released shortly, are held by multiplying them to all others of the operated line switch hold magnets and maintaining the junction at −34.6 volts. All operated line and trunk switch hold magnets are connected to conductor **60HC**. For example, if line and trunk switch hold magnets **41LHA4** and **42THA4** are operated, the junction of both windings is connected through contacts **41LHA4–1**, **46HCA–6**, and **42THA4–M** to conductor **60HC**. Conductor **60HC** is thus connected at one end to the junction of the windings of all operated line and trunk switch hold magnets, and through resistor **6017** and contacts **60LB–4**, **58C–3**, and **63R–14** to ground on

FIG. 60. This is done simultaneously with the application of the shunting potential to the trunk switch hold magnets. Thus, it is seen that even when two of the trunk switch hold magnets release, their associated line switch hold magnets are still connected to conductor 60HC and a 15.4 potential difference across their windings maintains them energized.

Although this technique of multipling the junctions of all operated line and trunk switch hold magnets to each other enables the two line switch hold magents, whose associated trunk switch hold magnets are soon to be released, to remain operated, the voltage equilibrium of the circuit is not disturbed. Every operated line and trunk switch hold magnet pair has its own hold current path, and looking at the junction of the two windings it is seen that the impedance to the left is merely that of the line switch hold magnet winding, 200 ohms, and the impedance to the right is that of a trunk switch hold magnet winding and one of the resistors 4402, a total of 450 ohms. The junctions of all windings may be connected to each other without disturbing the —34.6 voltage because each of the individual circuits maintains this same voltage at its windings junction. When two of the trunk switch hold magnets release, at the common junction point, conductor 60HC, there are still two 200 ohm paths to the left of the junction, and the equivalent of two 450 ohm paths to the right is now provided. This is accomplished by adding a 225 ohm resistance in parallel with the operated trunk switch hold magnet windings simultaneously with shunting the trunk switch hold magnets. This 225 ohms is the equivalent of the two 450 ohm branches in parallel that are removed during and after the release of the two trunk switch hold magnets. By connecting a 225 ohm resistor between conductor 60HC and ground while the two trunk switch hold magnets release, conductor 60HC is still maintained at —34.6 volts and all of the line switch hold magnets remain operated. This method of multipling all of the winding junctions to conductor 60HC to maintain operated the two line switch hold magnets whose associated trunk switch hold magnets are to be released, and adding a 225 ohm compensating resistor between conductor 60HC and ground, insures that all line switch hold magnets remain operated.

In the event that no other regular connections are established other than the two involved in the local connection, the two line switch hold magnet windings are both connected through the 225 ohm resistor to ground, and remain operated.

Conductor 60HC, and analogous conductor 39HC are connected on FIG. 60 through resistor 6017 and contacts 60LB–4, 58C–3 and 63R–14 to ground. Resistor 6017 has a magnitude of 225 ohms and thus when contacts 58C–3 close the compensating 225 ohm resistor is connected to conductors 60HC and 39HC. The operation of relay 58C, at the same time that it controls the release of the two trunk switch hold magnets involved in the local connection, causes the compensating resistance to be inserted in the circuit.

When relay 58C operates and contacts 58C–8 on FIG. 53, and 58C–6 on FIG. 54 close, the two trunk switch hold magnets involved in the local connection release. Negative source 4670 is connected through contacts 46HCB–22 and 46HCA–23 to conductor 54TS1, and through contacts 46HCB–23 and 46HCA–24 to conductor 54TS2. Conductor 54TS2 is connected through contacts 58C–8 and one set of contacts 53TK0–1 through 59TK19–1 either directly to one of conductors 52TSAB12–52TSAB19, or through the contacts of relays 53TKA or 53TKB to one of conductors 52TSA0–52TSB5. This one conductor, identified by the operated trunk relay, is connected through one of contacts 43TK–1 through 43TK–20 to the sleeve of the trunk connected to the trunk switch hold magnet that is to be released, the connection including crosspoints controlled by the trunk switch hold magnet to be released. Conductor 54TS1 is connected through 58C–6, 60LB–18, and 60LA–12 to conductor 54TS. This conductor is in turn connected through the translating network of FIG. 52, controlled by identification relays 58ID1–58ID8, to another one of the 20 conductors 52TSA0–52TSAB19. Thus the other trunk switch hold magnet to be released also has a negative potential applied to its associated one of conductors 36S0–36S19 or 39S0–39S19.

The resultant negative potential applied to each of the two selected conductors 52TSA0–52TSA19 is —34.6 volts and thus the two trunk switch hold magnets whose windings are connected to these conductors through the trunk switch crosspoints release. During this release operation the two associated line switch hold magnets remain operated as they are multipled to conductor 60HC as described above.

However, when the make contacts adjacent the trunk switch hold magnets release it is seen that the windings of the two associated line switch hold magnets are no longer connected to conductor 60HC. These two line switch hold magnet windings are now connected through the associated trunk switch hold magnet break contacts to conductors 42HC1 or 39HC1. The line switch hold magnets remain operated, however, as conductors 42HC1 and 39HC1 are connected to conductor 60HC. Conductors 42HC1 and 39HC1 are connected to conductor 3931 which is in turn connected on FIG. 60 through contacts 60LB–2 and 58C–2, and the top winding of relay 60CK to conductor 60HC. Thus although the windings of the two line switch hold magnets are no longer connected to conductor 60HC through the make contacts of the associated trunk switch hold magnets, they are now connected to the same conductor through the break contacts of these magnets and the winding of relay 60CK, and thus remain operated.

The winding of relay 60CK is included in the path in order that relay 60CK operate after both trunk switch hold magnets have released. Current flows through this winding, the current being derived in part from the current through one of the line switch hold magnets, and in part from the winding current of another of the line switch hold magnets. Relay 60CK operates only after both component currents flow through its top winding, or in other words, after both trunk switch hold magnets have released, and have controlled the associated make contacts to open and the break contacts to close. The resistance of the top winding of relay 60CK is negligible and as the 225 ohm resistor 6017 is still connected to conductors 60HC and 39HC the voltage equilibrium of the circuit is not disturbed. The energization of relay 60CK indicates that the two trunk switch hold magnets may now be reoperated. The trunk switch hold magnets may be reoperated, however, only after the required trunk switch select magnets on FIG. 43 have operated. Relays 43HMA and 43HMB control the reoperation of the trunk switch hold magnets, and these relays energize only after relay 60CK has operated indicating that the two trunk switch hold magnets have released, and after the trunk switch select magnets have also been energized.

After the trunk switch select magnets on FIG. 43 operated, ground potential was applied to the windings of both relays 43HMA and 43HMB. These relays did not operate however as conductor 58HMW was unenergized. After relay 60CK operates, however, this conductor is connected to a negative potential and the two relays operate. The relay windings are connected through closed contacts 46TR1–5, conductor 58HMW, contacts 63L–12, 60LB–9, now closed contacts 60CK–2, and through two of contacts 58ID1–1 through 58ID8–1 to negative source 5804. Relays 43HMA and 43HMB operate and initiate the reoperation of the two priorly released trunk switch hold magnets when contacts 43HMA–1 through 43HMA–20 on FIG. 41 and contacts 43HMB–2 through 43HMB–21 on FIG. 39 close.

These contacts connect a ground potential through those of contacts **41LHA0–2** through **41LHA19–2**, and the analogous contacts on FIG. 39 associated with the operated line switch hold magnets, to respective conductors **41M–0** through **41M–19** and **39M–0** through **49M–19**. These conductors are in turn connected to the windings of the associated trunk switch hold magnets, and the ground potential is extended through these windings and conductors **41N–0** through **41N–19**, and **39N–0** through **39N–19** to the windings of the operated line switch hold magnets. The two trunk switch hold magnets priorly released now reoperate. The two priorly released trunk switch hold magnets reoperate as the negative potentials on their windings derived from the two energized ones of conductors **52TSA0** through **52TSAB19** are no longer applied, the trunk switch crosspoints connected to these conductors and controlled by these magnets having opened. These negative potentials are no longer applied when the crosspoints close as the crosspoints now closed are in horizontals 7 of the trunk switches rather than one of horizontals 0–6 to which conductors **52TSA0–52TSAB19** are connected.

Each pair of operated line and trunk switch hold magnets, including the reoperated trunk switch hold magnets, are held by current flowing from source **4108** through the line switch hold magnet windings, conductors **41N–0** through **41N–19**, the trunk switch hold magnet windings, conductors **41M–0** through **41M–9**, contacts **41LHA0–2** through **41LHA0–19**, and contacts **43HMA–1** through **43HMA–20**. There are similar current paths on FIG. 39 for line and trunk switches B, contacts on relay **43HMB** being used rather than contacts on relay **43HMA**. All of resistors **4402** are thus shunted, even those being used for holding regular connections. The junction of each pair of line and trunk switch hold magnets is thus at −25 volts rather than −34.6. Conductor **60HC** is, however, still connected to all of these junctions, and the 225 ohm resistor **6017** might now disturb the voltage equilibrium of the circuit. To insure that such a condition does not arise, a negative 25 volt potential is applied to conductor **60HC** to counteract any deleterious effects on the circuit that may now arise from resistor **6017** which although necessary before is no longer needed. Negative source **4670** has a magnitude of 50 volts and when relay **43HMB** operates this source is connected through contacts **46HCA–22** and **43HMB–22**, conductor **60LC1**, resistor **6091**, and the top winding of relay **60CK** to the junction of resistor **6017** and conductor **60HC**. Resistor **6091** has a magnitude of 225 ohms, and with resistor **6017** forms a voltage dividing relationship that places a negative 25-volt potential on conductor **60HC**. In this manner resistor **6017** is effectively removed from the circuit as conductor **60HC** is maintained at the negative 25-volt potential that it would normally be at from the operating currents for the line and trunk switch hold magnets.

All of the regular connections are held by currents flowing through line and trunk switch hold magnet windings and directly through contacts **43HMA–1** through **43HMA–20**, and **43HMB–2** through **43HMB–21** to ground. After the local connection switching sequence is completed, relays **43HMA** and **43HMB** release and these contacts open. The line and trunk switch hold magnets establishing the regular connections are then held once again by currents flowing through the hold magnet windings and resistors **4402** to ground.

The two reoperated trunk switch hold magnets and the associated line switch hold magnets are now held operated over two of contacts **43HMA–1** through **43HMA–20**, or **43HMB–2** through **43HMB–21**. These contacts open at the end of the local connection switching sequence, and it is necessary to provide another holding current path. This current path cannot include resistors **4402** as these resistors are not connected to the two local trunks. Also, it is necessary to register the fact that the local trunk just connected to the two line equipments is in use. When the trunk switch cross points close, the windings of the two trunk switch hold magnets involved in the local connection are connected through respective conductors **36S0–36S19** and **39S0–39S19**, and the crosspoints in horizontals 7 to one of conductors **37SX0** or **37SX1**. This conductor, at the ground potential of two of conductors **41M–0** through **41M–19** or **39M–0** through **39M–19**, is connected to the winding of either relay **40K0** or **40K1**. If the first local trunk was available, relay **40K0** was previously unoperated and conductor **37SX0** is now connected through contacts **40K0–6** and **46HCB–24** to conductor **39CK1**. If the first local trunk was previously in use and the local trunk now chosen is the second local trunk, contacts **40K0–5** are closed as are contacts **40K1–4**, and conductor **37SX1** is connected to conductor **39CK1**. The ground potential on conductor **39CK1** is extended through contacts **60CK1–B1** to the winding of relay **60CK1** which now operates. Relay **60CK1** locks over contacts **60CK1–M1**, and **58C–4** and **54TR–2**.

It is necessary to operate relay **40K0** if the first local trunk was just put in use and relay **40K1** if the second local trunk was just put in use. Contacts **60CK1–1** and **60CK1–2** close when relay **60CK1** operates, and negative source **6016** is now connected through these contacts to respective conductors **60K1** and **60K0**. As contacts **43HMA–21** and **43HMB–23** are now closed it is seen that the negative potential of source **6016** is connected through the winding of either relay **40K0** or **40K1** to the grounded sleeve of the associated local trunk just chosen. Either relay **40K0** or **40K1** now operates. If relay **40K0** operates, contacts **40K0–3** and **40K0–4** close, and relay **40K0** is held for the remainder of the local connection by current from source **4002** flowing through contacts **40K0–4**, the winding of relay **40K0**, contacts **40K0–3**, and resistor **4020** to ground. In addition, the sleeve of the first local trunk is now connected through contacts **40K0–3** and resistor **4020** to ground, which provides the holding current path for the two hold magnets establishing the local connection. Similarly, if the second local trunk was just put in use, relay **40K1** operates from the negative potential applied to conductor **60K1**. Contacts **40K1–2** and **40K1–3** close and provide a holding current path for relay **40K1**. In addition, contacts **40K1–2** and resistor **4021**, connected to conductor **37SX1**, provide a holding current path for the two hold magnets establishing the local connection.

With relay **60CK1** operated, contacts **60CK1–3** on FIG. 59 open and the operated select magnets release. Contacts **60CK1–6** on FIG. 62 are closed and when the field unit transmits a negative signal over one of the conductors in the second control pair in the normal manner indicating that it has completed the local connection, the reset multivibrator on FIG. 62 switches state. A positive potential is applied at the collector of transistor **62T1** which is transmitted through diode **6315** to turn off transistor **63T3** of the local multivibrator on FIG. 63. Relay **63L** releases. Relay **60LA** remains operated due to the discharge of capacitor **6012** but when this discharge is completed relay **60LA** releases. Contacts **60LA–7** on FIG. 63 now opens and transistor **63T4** conducts. The local bistable multivibrator is in its normal unoperated condition and relay **63L** becomes unenergized. This relay and relay **60LA** which are now both unenergized control the resetting of the central office unit and common control. Conductor **62RSA** is energized at this time, although it was not when the reset flip-flop was first triggered during the local connection sequence, as contacts **60LA–6** are now closed. The service action flip-flop is thus reset with transistor **46T0** conducting. When contacts **58C–4** and **54TR–2** on FIG. 60 open, relay **60CK1** releases. The positive pulse applied to conductor **62TS** causes the monostable multivibrator on FIG. 62 to enter its unstable

state as in the other switching sequences. After 125 milliseconds the common control causes line scanning to resume.

G. *Local connection release—detailed description of central office unit and common control operations*

The local connection release sequence is initiated in the field unit as it is this unit which recognizes the on-hook condition of either or both of the subscribers priorly involved in the local connection. During the 5 milliseconds between successive groups of line scanning pulses, the field unit transmits a simplex pulse over the first control pair if a local connection must be released.

This pulse triggers the service action bistable multivibrator in the same manner as in a regular connection sequence. With transistor **46T1** conducting a positive potential is applied to conductor **46SF**. Transistor **63L0** conducts as in the regular connection sequence. When transistor **63L0** conducts a negative potential appears at its collector. This negative potential is extended through resistor **6248** and diode **6243** to turn on transistor **62T4** of the LCR bistable multivibrator. The conduction of transistor **63L0** turns on transistor **62T4** only when the monostable multivibrator is in the unstable state as it is between groups of line scans. During the scanning process with the multivibrator in its stable state, the collector of transistor **62T5** is positive in potential and this potential is transmitted through diode **6221** and resistor **6222** to the cathode of diode **6243**. Diode **6243** is reverse biased and the negative potential at the collector of transistor **63L0** is not transmitted to the base of transistor **62T4** to turn it on. The LCR flip-flop can thus be triggered only between successive groups of line scans.

The negative potential at the collector of transistor **63L0** does not turn on transistors **65TA** and **65TB** at this time. The monostable multivibrator is in its unstable state and inhibits transistors **65TA** and **65TB** from conducting. The collector of transistor **62T6** is now more positive in potential rather than the collector of transistor **62T5**. This positive potential is transmitted through diode **6224**, resistor **6223** and resistors **6545** and **6546** to reverse bias the emitter-base junctions of transistors **65TA** and **65TB**.

When the service action bistable multivibrator on FIG. 46 changes state relay **46IA0** energizes. Also, with transistor **62T4** conducting, relay **62LCR** energizes. And the positive potential at the collector of transistor **62T4** is extended through diode **6260**, conductor **6302**, conductor **6251**, and diode **6518** to the junction of capacitor **6519** and resistor **6520** to stop the astable multivibrator.

With relay **62LCR** energized, contacts **62LCR–7** are closed. Current flows from negative source **5404** through these contacts, contacts **54LCRA–1**, and the winding of relay **54LCR1** to ground. This relay thus operates. Contacts **54LCR1–10** on FIG. 63 in closing, operate transistor **63TSC**. Transistor **63TSC** in operating, turns transistor **63L0** off.

With relay **62LCR** energized contacts **62LCR–6** on FIG. 54 are also closed. Current flows through the lower winding of relay **54TR** which thus energizes. Contacts **54TR–1** close and relay **46TR1** energizes.

On FIG. 53 contacts **54LCR1–4** are now closed as are normally closed contacts **54LCRA–4**. Ground potential is extended to conductor **53CK1** and relay **60CK1** energizes. As contacts **54TR–2** are now closed relay **60CK1** locks through these contacts and contacts **60CK1–M1** to ground. Contacts **62LCR–5** on FIG. 54 are also closed to start the timing operation to reset the circuit if the local connection release is not completed in the predetermined time interval. On FIG. 65 contacts **54LCR1–8** close and ground potential is extended through resistor **6522** and diode **6518** to the junction of capacitor **6519** and resistor **6520**. As in the other sequences the astable multivibrator is thus also held to prevent further scanning until the local connection is released at both central office and field units.

The field unit must be notified that the common control has recognized the simplex signal. Conductor **5810** is positive in potential and when contacts **62LCR–8** and **62LCR–9** close this positive potential appears on conductors **54T2'** and **54R2'**. As contacts **46TR1–8** and **46TR1–9** are now closed the positive potential is transmitted over both conductors of the second control pair. As described above both relays **25R** and **25L** in the field unit operate.

The field responds with a negative potential on either the tip and/or ring of the first control pair depending upon which local trunk must be released. It will be recalled that the central office unit does not identify which local trunk or both must be released at this time. The negative potential on either or both of the tip and ring conductors of the first control pair at this time only causes the further operation of the common control. The negative potential is extended through contacts **46TR1–6** and/or **46TR1–7** to FIG. 54. If the negative potential appears on conductor **54T1'** it is extended through contacts **62LCR–10** and **54LCRA–2** to conductor **62SK**. Similarly, if a negative potential is on conductor **54R1'** it is extended through contacts **62LCR–11** and **54LCRA–3** to conductor **62SK**. As contacts **60CK1–6** on FIG. 62 are closed, the negative potential on conductor **62SK** causes the reset multivibrator to switch state as in the other sequences. Transistor **62T1** conducts and the positive potential at its collector is transmitted through diode **6258** and resistor **6250** to the base of transistor **62T4** which now turns off. Transistor **62T3** does not turn on, however, because contacts **54LCR1–7** are now closed and the ground potential extended through these contacts and resistor **6246** to the base of transistor **62T3** maintains this transistor nonconducting. With transistor **62T4** off, relay **62LCR** releases. On FIG. 54 contacts **62LCR–12** now close and as contacts **54LCR1–2** are now closed, relay **54LCRA** operates from negative source **5404**. This relay locks over contacts **54LCRA–9** and **54LCR1–3**.

Relay **54LCR1** was priorly held operated over contacts **54LCRA–1** which are now open. However, the relay remains operated. When contacts **54LCR1–1** first closed, capacitor **5403** charged. Although current from source **5402** through resistor **5401** is insufficient to maintain the relay operated, when contacts **54LCRA–1** open, capacitor **5403** begins to discharge through the relay winding and keeps the relay operated. Contacts **54KOR–2** and/or **54KIR–2** close before the discharge has completed and source **5431** then holds the relay operated.

With relay **62LCR** released contacts **62LCR–6** are open and relay **54TR** releases. Contacts **54TR–2** on FIG. 60 open and relay **60CK1** releases. This relay does not reoperate as the ground potential on conductor **53CK1** is now removed, contacts **54LCRA–4** being now open as well as contacts **54LCR1–9**. Relay **54TR** released causes relay **46TR1** to release as well. When relay **60CK1** releases and contacts **60CK1–B2** close the pulse applied on conductor **62TS** causes transistor **62T5** to turn off, and the monostable multivibrator is placed in its unstable state. The monostable multivibrator has by now timed out, 5 milliseconds having expired. During the period of unstable operation between group scans, it enabled the LCR flip-flop to be triggered by the conduction of transistor **63L0**, and prevented transistors **63TA** and **63TB** from conducting. Even though it times out after 5 milliseconds, the LCR flip-flop remains set at it has already been triggered. And the more positive potential at the collector of transistor **62T4** is now transmitted through diode **6291** to hold transistors **63TA** and **63TB** off. The monostable multivibrator is now triggered once again and the 125 millisecond unstable operation ensues.

Although the resets flip-flop now has transistor **62T1** conducting, as in the local connection, conductor **62RSA** must not be energized for resetting the service action

flip-flop as the local connection release sequence is not yet completed. Contacts **54LCR1–6** are now open and thus conductor **62RSA** is not connected to the collector of transistor **62T1**.

Although transistor **62T4** is now off, transistor **63TSC** remains conducting. Contacts **54LCR1–10** are closed and cause the emitter-base junction of this transistor to be forward biased. Transistor **63L0** thus remains off.

When relay **62LCR** releases contacts **62LCR–8** and **62LCR–9** on FIG. 54 open, the positive potentials priorly on the tip and ring conductors of the second control pair are removed, and relays **25L** and **25R** in the field unit release.

When the monostable multivibrator on FIG. 62 restores to its stable state, transistor **62T5** conducts again. A positive pulse is extended through capacitor **6220** and diode **6218** to the base of transistor **62T1** which now turns off. The reset flip-flop is thus in its normal condition. The positive potential at the collector of transistor **62T1** which was holding transistor **62T4** off is now removed. As transistor **62T3** is held off by closed contacts **54LCR1–7**, transistor **62T4** immediately turns on. Relay **62LCR** operates once again as do relays **54TR** and **46TR1**. With relay **62LCR** reoperated the positive potential is applied once again to the tip and ring of the second control pair. Relays **25L** and **25R** reoperate in the field unit.

With contacts **62LCR–10** and **62LCR–11** on FIG. 54 closed as a result of the reoperation of relay **62LCR**, and with contacts **54LCRA–6** and **54LCRA–7** closed as a result of the energization of relay **54LCRA**, the negative potential on conductor **5807** is extended through the windings of relays **54KOR** and **54KIR** and these four sets of contacts to conductors **54T1'** and **54R1'**. These two potentials are then extended through contacts **46TR1–6** and **46TR1–7** to the tip and ring conductors of the first control pair. It will be recalled that although the negative potential is applied to both of these conductors current flows through the tip only if the first local trunk is to be released and current flows through the ring only if the second local trunk must be released. The field unit determines which or both of the local trunks must be released and permits current to flow through the corresponding tip or ring conductor of the first control pair. Consequently, relay **54KOR** operates, if the first local trunk must be released, when current flows through the tip of the first control pair. Relay **54KIR** operates, if the second local trunk must be released, when current flows through the ring of the first control pair. If both local trunks must be released both of relays **54KOR** and **54KIR** energize.

If the first local connection is to be released and current flows through the tip of the first control pair, relay **54KOR** energizes and contacts **54KOR–3** on FIG. 60 close. Negative source **6016** is connected through contacts **46TR1–11** to the winding of relay **40K0**. Relay **40K0** is operated whenever the first local trunk is in use, holding current coming from source **4002**. With the potential of negative source **6016** now connected to one end of the winding of relay **40K0**, this relay releases as the potential difference across its winding is zero. The negative potential on conductor **60S0** is also extended through the sleeves of the trunk switches to the lower ends of the windings of the two trunk switch hold magnets maintaining the connection. These hold magnets are held during the call by current flowing from negative source **4108** or the equivalent source on FIG. 39 through the windings of the line and trunk switch hold magnets in series, the sleeve of the local trunk, and through either contacts **40K0–3** and resistor **4020** or contacts **40K1–3** and resistor **4021**, to ground. When the negative potential of source **6016** is applied to the sleeve conductors the potential difference across each pair of line and trunk switch hold magnets is zero and they now release.

Relay **54KOR** is held by two currents. One of these is the current in the tip of the first control pair which ceases to flow when the field has completed the release of the local connection. The other holding current is also derived from the potential on conductor **5807** and flows through the winding of relay **54KOR** and through contacts **54KOR–1**, resistor **5409**, conductor **46TH**, contacts **46TR1–13** and contacts **40K0–7** to ground. When the field releases its local connection current in the tip of control pair 1 ceases. When the central office unit releases its local connection relay **40K0** releases and contacts **40K0–7** open thereby preventing the second current flow through the winding of relay **54KOR**. The release of relay **54KOR** thus indicates that both units have released their respective first local trunks.

Similarly, if the second local trunk is to be released the potential of negative source **6016** is extended through contacts **54KIR–3**, conductor **60S1** and contacts **46TR1–12** to the sleeve of the second local trunk which causes both the line and trunk switch hold magnets establishing the local connection to release. The negative potential on conductor **60S1** is also connected to the winding of relay **40K1** which now releases. The two holding currents for relay **54KIR** are similar to those for relay **54KOR**. When the field unit has released its local connection, current in the ring of the first control pair ceases. When the central office unit has released its second local trunk the second energizing current for relay **54KIR** which flows through conductor **5807**, the winding of relay **54KIR**, contacts **54KIR–1**, resistor **5408**, conductor **46RH** and contacts **46TR1–14** and **40K1–5** to ground ceases. At this time relay **54KIR** releases indicating that both units have released their second local trunks if this release was required.

Relay **54LCR1** has been held during this time by current flowing through the relay winding, contacts **54LCR1–1** and either contacts **54KOR–2** or **54KIR–2** to negative source **5431**. The discharge of capacitor **5403** holds relay **54LCR1** after contacts **54LCRA–1** open until either or both of relays **54KOR** or **54KIR** energizes at which time the relay is held by source **5431**. When either or both of the operated relays **54KOR** or **54KIR** release the holding path for relay **54LCR1** is broken and this relay releases. It should be noted that in the event that both local trunks must be released both of relays **54KOR** and **54KIR** must release before relay **54LCR1** de-energizes. When this relay does release, contacts **54LCR1–9** on FIG. 53 close. As relay **54LCRA** is still operated contacts **54LCRA–8** are closed and ground potential is now applied once again to conductor **53CK1**. Relay **60CK1** operates and locks through contacts **54TR–2**. On FIG. 62 contacts **54LCR1–5** are now closed as relay **54LCR1** has released. Contacts **54LCRA–5** are still closed as relay **54LCRA** is still operated. As contacts **60CK1–7** have just closed, a negative potential is extended from source **6261** through these contacts and resistor **6211** to the anode of diode **6212**. This causes the reset multivibrator to operate in the same manner as when a negative potential is applied on conductor **62SK**. When transistor **62T1** turns on, the LCR bistable multivibrator is restored to its normal conduction. Transistor **62T3** is no longer held off as contacts **54LCR1–7** are now open. Consequently, the positive potential applied at the collector of transistor **62T1** is transmitted through diode **6258** and resistor **6250** to the base of transistor **62T4**, and causes this transistor to turn off and transistor **62T3** to turn on. Relay **62LCR** releases and as contacts **62LCR–8** and **62LCR–9** on FIG. 54 open the positive potential on the tip and ring of the second control pair is removed. The field unit releases and is restored to its normal condition. Contacts **54LCR1–6** are now closed and the more positive potential on conductor **62RSA** connected to the collector of conducting transistor **62T1** causes the service action flip-flop on FIG. 46 to reset. With relay **62LCR** released, contacts **62LCR–6** on FIG. 54 open and relay **54TR** releases. Contacts **54TR–2** on FIG. 60 open and relay **60CK1** releases. When contacts **60CK1–B2** close a pulse is ap-

plied to conductor 62TS which causes the monostable multivibrator to be placed in its unstable state after 125 milliseconds scanning resumes.

IV. EPILOGUE

The invention is a line concentrator system wherein a common control serves a plurality of central office and field units. The system is universal in that it may generally be used with any of the well-known present-day telephone systems. The common control scans all units simultaneously for service requests. At the same time the common control causes the scanning of trunks for trunk release requests, and pairs of trunks for possible interconnections, the two types of trunk scanning being on an interleaved basis and occurring in only one of the central office units at any one time.

The common control causes the establishment of regular connections in both central office and field units of a particular pair in response to a service request. In response to a request for trunk release the common control releases the line, link, and trunk connections.

When the common control determines that two trunks serving the same units are connected to each other through the central office switching equipment the two trunks connecting respective subscriber lines and line circuits are both released. In the field unit the two subscriber lines are connected directly to each other by one of two local trunks. In the central office unit the two line circuits are connected directly to each other by respective ones of two local trunks. The field unit local trunk circuit provides talking battery to the subscriber lines and supervises the remainder of the call. The central office local trunk connections are established to return busy tone to all telephone users calling either of the subscriber lines on the field unit local connection.

When the field unit local trunk supervisory circuit detects the termination of a local call, a signal is transmitted to the respective central office unit during the time interval between groups of line scans. The simplex pulse arriving at the central office unit between groups of line scans rather than during the line scanning sequence, notifies the common control that the field unit request is for the release of a local connection rather than a service request. The common control proceeds to cause the release of the local connections in both central office and field units.

Because of the local trunk feature fewer inter-unit trunks are required than those in prior art systems having the same call capacity. Two or four subscribers served by the field unit may be so served without the use of inter-unit trunks. Thus, although only 20 trunks are extended between each pair of field and central office units, a maximum of 24 subscribers may be served at any one time. If more than two pairs of local subscribers are talking to each other only two local connections may be established. However, immediately after one of the local connections is released, local connection scanning resumes, and another pair of subscribers are connected to each other by the previously released local trunk.

It is to be understood that the above-described arrangements are illustrative of the application of the principles of the invention. Numerous other arrangements may be devised by those skilled in the art without departing from the spirit and scope of the invention.

What is claimed is:

1. A telephone line concentrating system comprising a plurality of pairs of field and central office units, each of said field units being connected to a plurality of subscriber lines, and each of said central office units being connected to a plurality of respective line circuits; a respective plurality of voice communication trunks extended between each pair of said field and central office units; respective control conductors extended between each pair of said field and central office units; and common control means connected to each of said central office units, said common control means including

(1) means for scanning all of said line circuits for service requests, means for transmitting signals over said control conductors to said field units to control the scanning of all of said subscriber lines for service requests, means for connecting said line circuits to said trunks responsive to service requests and for transmitting switching information over said control conductors to cause said field units to connect said subscriber lines to said trunks;

(2) means for scanning said trunks to determine release requests of said trunks, means for disestablishing the connections between the line circuits connected to said trunks responsive to said trunk release requests, and for transmitting switch information over said control conductors to cause said field units to disestablish the connections between the respective subscriber lines and said trunks; and

(3) means for detecting the interconnection of any two trunks in the same plurality through two connected line circuits in the same plurality, means for disconnecting said two line circuits connected to said two trunks from said two trunks and for connecting said line circuits directly to each other, means for transmitting switching information over said control conductors to cause the respective field unit to disconnect the two subscriber lines connected to said two trunks from said two trunks and to connect said two subscriber lines directly to each other; and means in all of said field units for detecting the termination of a call between two subscriber lines connected directly to each other in said field units and for transmitting signals to said central office units and said common control means over the said control conductors; said common control means further including

(4) means responsive to said signals for controlling the disconnection of the two respective line circuits connected directly to each other, and means for transmitting switching information over the said control conductors to cause said field units to disconnect said two subscriber lines from each other.

2. A telephone line concentrating system in accordance with claim 1 wherein each of said field and central office units contains a plurality of local trunks selectively connectable respectively to two of said subscriber lines and two of said line circuits for establishing said direct connections.

3. A telephone line concentrating system in accordance with claim 1 further including means connected to all of said central office units for enabling said common control means to establish and disestablish connections in only one pair of said field and central office units at any particular time.

4. A telephone line concentrating system in accordance with claim 1 wherein said trunk release scanning means includes means for applying nonaudible signals to line circuits connected to said trunks; means for inhibiting said signals from being transmitted to trunks connected to line circuits not requiring release; and means for detecting said signals on the remainder of said trunks connected to line circuits requiring release.

5. A line concentrating system in accordance with claim 1 wherein said means for detecting the connection of any two trunks in the same plurality to each other includes means for applying a nonaudible signal successively to every trunk in each one of said pluralities; means for scanning the other trunks in the same plurality for said signal; and means responsive to the detection of said signal for indicating the interconnection of the trunk on which said signal is applied and the trunk on which said signal is detected.

6. A telephone line concentrating system in accordance with claim 1 wherein said common control means includes

means for controlling the scanning of subscriber lines and line circuits for service requests in each of said field and central office units simultaneously, means for controlling said trunk release scanning and said scanning to detect the interconnection of any two trunks to occur on an interleaved basis, means for controlling said interleaved scannings to be performed on only one of said pluralities of trunks at any particular time, and means for controlling said subscriber line and line circuit scanning to be performed simultaneously with said interleaved scannings.

7. A telephone line concentrating system in accordance with claim **6** wherein said common control means further includes means for controlling the scanning of said subscriber lines and line circuits in successive groups; means for inhibiting said subscriber line and line circuit scanning for a predetermined time interval after each group scan; and means in all of said field units for controlling the transmission of said signals to said central office units and common control means only during said predetermined time interval; said common control means including means for enabling said common control means to detect said signals only during said predetermined time interval.

8. A telephone line concentrator comprising a plurality of field units and a plurality of respective central office units; a plurality of subscriber lines connected to each of said field units; an equal plurality of respective line circuits connected to each of said central office units; a respective plurality of trunks connected between each pair of said central office and field units; and common control means connected to each of said central office units for scanning said line circuits and for controlling the scanning of said subscriber lines for service requests, for controlling the connection of any subscriber line to the respective line circuit over one of said trunks responsive to a service request, for scanning said trunks for release requests, and for controlling the disconnections of a subscriber line and line circuit connected to a trunk requesting release characterized by a respective plurality of local trunks in each of said field units selectively connectable to pairs of said subscriber lines; means in said common control means for scanning pairs of trunks in the same plurality to detect the interconnection of two trunks; and means in said common control means responsive to said trunk pair scanning means for controlling the release of the two interconnected trunks, and for controlling the connection directly to each other of the two subscriber lines previously connected to said two trunks over one of said local trunks.

9. A telephone line concentrator in accordance with claim **8** further characterized by means for inhibiting said trunk pair scanning for any pair of central office and field units when all of the respective local trunks are in use.

10. A telephone line concentrator in accordance with claim **8** wherein the subscriber lines connected to each field unit are divided into a plurality of groups, the respective line circuits are divided into an equal plurality of groups, and the respective trunks are divided into a plurality of groups further characterized by a plurality of groups of linkage means in each of said central office and field units for connecting particular groups of subscriber lines or line circuits only to particular groups of trunks.

11. A telephone line concentrator in accordance with claim **10** further characterized by means for inhibiting said scanning for service requests of a subcriber line or line circuit if all of the linkage means connectable to said subscriber line or line circuit are in use.

12. A telephone line concentrator in accordance with claim **10** further characterized by means for inhibiting said scanning for service requests of a subscriber line or line circuit if all of the trunks to which said subscriber line or line circuit is connectable are in use.

13. A telephone line concentrator in accordance with claim **8** further characterized by a pluraliy of local trunks in each of said central office units connectable to pairs of said line circuits; and means in said common control means for interconnecting any two line circuits in the same central office unit over one of said central office unit local trunks in response to the establishment of a direct connection between the two respective subscriber lines in the respective field unit.

14. A telephone line concentrator in accordance with claim **8** further characterized by means connectable to said field unit local trunks for connecting energizing potentials to said subscriber lines, and means for supervising direct connections between said subscriber lines.

15. A telephone line concentrator in accordance with claim **8** further characterized by means in said common control means for applying supervisory signals to the line circuits whose respective subscriber lines are connected directly to other subscriber lines in the same field unit.

16. A telephone line concentrator in accordance with claim **8** further characterized by signaling means extended between each of said field units and said common control means and each of said central office units and said common control means for enabling said common control means to verify that connections and disconnections have been established in response to signals from said common control means.

17. A line concentrator for connecting a plurality of subscriber lines at a remote location to a plurality of respective line circuits in a telephone central office by a plurality of trunks fewer in number than said subscriber lines comprising means in said central office and at said remote location for scanning said subcriber lines and said line circuits for service requests; means in said central office responsive to said scanning means for establishing a connection of a line circuit to one of said trunks and for transmitting first information to said remote location representing the identity of said trunk; means at said remote location responsive to the transmission of said first information for connecting said identified trunk to the respective subscriber line associated with said line circuit; means in said central office for scanning said trunks to determine a release request of any one of said trunks; means in said central office responsive to said trunk scanning means for releasing said trunk requesting release and for transmitting second information to said remote location representing the identity of said trunk; means at said remote location responsive to the transmission of said second information for releasing said identified trunk; means in said central office for sequentially scanning pairs of said trunks to detect if any pair of said trunks are connected to each other through said central office; means responsive to said detecting means for transmitting third information to said remote location representing the identity of the two trunks connected to each other; means at said remote location responsive to the transmission of said third information for releasing said two trunks and for connecting the two subscriber lines priorly connected to said two trunks directly to each other at said remote location; means in said central office responsive to said detecting means for releasing said two trunks and for connecting the two line circuits priorly connected to said two trunks directly to each other at said central office; means at said remote location for detecting when two subscriber lines connected directly to each other at said remote location request release and for transmitting a signal to said central office; and means at said remote location and in said central office for releasing direct connections responsive to the transmission of said signal.

18. A line concentrator in accordance with claim **17** wherein said subscriber lines and respective line circuits are separated into a plurality of respective groups, and said plurality of trunks are separated into an equal plurality of groups with each of said trunk groups serving

a pair of subscriber line and line circuit groups, said line concentrator further including means at said remote location for controlling said connecting and releasing operations upon only one group of said subscriber lines at any particular time, and means in said central office for controlling the operation upon only the respective one of said groups of line circuits at the same time.

19. A telephone line concentrator comprising a plurality of subscriber lines connected to a field unit, an equal plurality of respective central office line circuits connected to a central office unit, and a lesser plurality of trunks extended between said central office and field units selectively connectable to respective subscriber lines and line circuits characterized by means for detecting the interconnection of any two of said trunks through the telephone central office; means for signalling said central office and field units of the identity of said two interconnected trunks; and means in said central office and field units for releasing said two trunks and for respectively connecting directly to each other the two line circuits and the two subscriber lines previously connected to said two trunks.

20. A telephone line concentrator in accordance with claim **19** wherein said detecting means comprises means for successively applying a nonaudible signal to each one of said trunks; means for sequentially scanning all others of said trunks for said signal; and means responsive to the detection of said signal on one of said other trunks for indicating that said one trunk is interconnected to said one of said other trunks through said central office.

21. A telephone line concentrator in accordance with claim **19** further characterized by means in said field unit for detecting an on-hook condition of a subscriber line connected directly to another of said subscriber lines in said field unit and for transmitting a signal to said central office unit; and means in said central office unit responsive to said signal for controlling the release of said on-hook subscriber line from said other subscriber line and the release in said central office unit of the two respective line circuits.

22. A switching circuit comprising a first plurality of terminals; a second plurality of terminals; a plurality of connecting means each selectively connectable between one of the terminals in said first plurality and one of the terminals in said second plurality; switching means for selectively connecting any one of the terminals in said second plurality to another one of the terminals in said second plurality; means for detecting the interconnection of any two of said connecting means through said switching means; means responsive to said detecting means for disconnecting the two interconnected connecting means from the terminals in said first and second plurality; and means for connecting directly to each other those two terminals in said first plurality priorly respectively connected to said two connecting means and those two terminals in said second plurality priorly respectively connected to said two connecting means.

23. A switching circuit comprising a first plurality of terminals; a second plurality of terminals; a plurality of connecting means each selectively connectable between one of the terminals in said first plurality and one of the terminals in said second plurality; switching means for selectively connecting any one of the terminals in said second plurality to another one of the terminals in said second plurality; means for detecting the connection of one of the terminals in each of said first and second pluralities to another of the terminals in each of said first and second pluralities through said switching means; means responsive to said detecting means for disconnecting the two connecting means connecting respectively said ones and said others of said terminals in said first and second pluralities from said terminals; and means for connecting directly to each other those two terminals in said first plurality priorly connected to said two connecting means and those two terminals in said second plurality priorly connected to said two connecting means.

24. A switching circuit in accordance with claim **23** further including means for detecting a request for releasing the direct connection of said two terminals in said first plurality and the direct connection of said two terminals in said second plurality priorly connected respectively to said two terminals in said first plurality by said two disconnected connecting means; and means responsive to said release request detecting means for releasing said two direct connections.

25. A switching circuit comprising a first plurality of terminals; a second equal plurality of terminals; a plurality of connecting means each selectively connectable between one of the terminals in said first plurality and one of the terminals in said second plurality; switching means for selectively connecting any one of the terminals in said second plurality to another one of the terminals in said second plurality; means for detecting the connection of one of the terminals in each of said first and second pluralities to another of the terminals in each of said first and second pluralities through said switching means; means responsive to said detecting means for disconnecting the two connecting means connecting respectively said ones of said terminals in said first and second pluralities and said others of said terminals in said first and second pluralities from said terminals; and means for connecting directly to each other those two terminals in said first plurality priorly connected to said two connecting means.

26. A telephone line concentrator comprising a plurality of field units and a plurality of respective central office units, a plurality of subscriber lines connected to each of said field units, an equal plurality of respective line circuits connected to each of said central office units, a respective plurality of trunks connected between each pair of said central office and field units, common control means connected to each of said central office units for controlling the connection of said subscriber lines to said line circuits over said trunks characterized by means in said common control means for detecting the connection of any trunk to another of said trunks in the same plurality; and means in said common control means responsive to said detecting means for controlling the release of said two trunks connected to each other, the connection directly to each other of the two subscriber lines previously connected to said two trunks, and the connection directly to each other of the two line circuits previously connected to said two trunks.

27. A telephone line concentrator in accordance with claim **26** further including means in each of said field units responsive to the on-hook condition of a subscriber line connected directly to another subscriber line in the same field unit for signaling said common control means of said on-hook condition; and means controlled by said common control means for disestablishing the direct connection in said field unit connecting said on-hook subscriber line to said other subscriber line in the same field unit, and for disestablishing the direct connection in the respective central office unit connecting the respective line circuits.

28. A switching circuit comprising a first plurality of groups of terminals and a second plurality of groups of terminals; a plurality of respective groups of connecting means, each of said connecting means being selectively connectable to the terminals in said first plurality of groups and the terminals in said second plurality of groups and to others of said connecting means; means for detecting the connection of any one of said connecting means to another of said connecting means in the same group; and means responsive to said detecting means for disconnecting said two connected connecting means, for directly connecting to each other those two terminals in said first plurality of groups previously connected to said two connecting means, and for directly

connecting to each other those two terminals in said second plurality of groups previously connected to said two connecting means.

29. A telephone line concentrator comprising a plurality of subscriber lines connected to a field unit, an equal plurality of respective central office line circuits connected to a central office unit, and a lesser plurality of trunks extended between said central office and field units selectively connectable to respective subscriber lines and line circuits, a plurality of means for connecting any two of said subscriber lines directly to each other through said field unit, means for detecting the interconnection of any two of said trunks through the telephone central office, means responsive to said detecting means for releasing said two interconnected trunks and for connecting the two subscriber lines connected to said two trunks

directly to each other over one of said direct connecting means, means for inhibiting said detecting means if all of said direct connecting means are in use, means for releasing any one of said direct connecting means from said subscriber lines, and means for reoperating said detecting means responsive to the release of one of said direct connecting means.

References Cited by the Examiner

UNITED STATES PATENTS

3,198,887 8/1965 Brooks et al. _____ 179—18

ROBERT H. ROSE, *Primary Examiner.*

WILLIAM C. COOPER, *Examiner.*